Revised 2-27-09

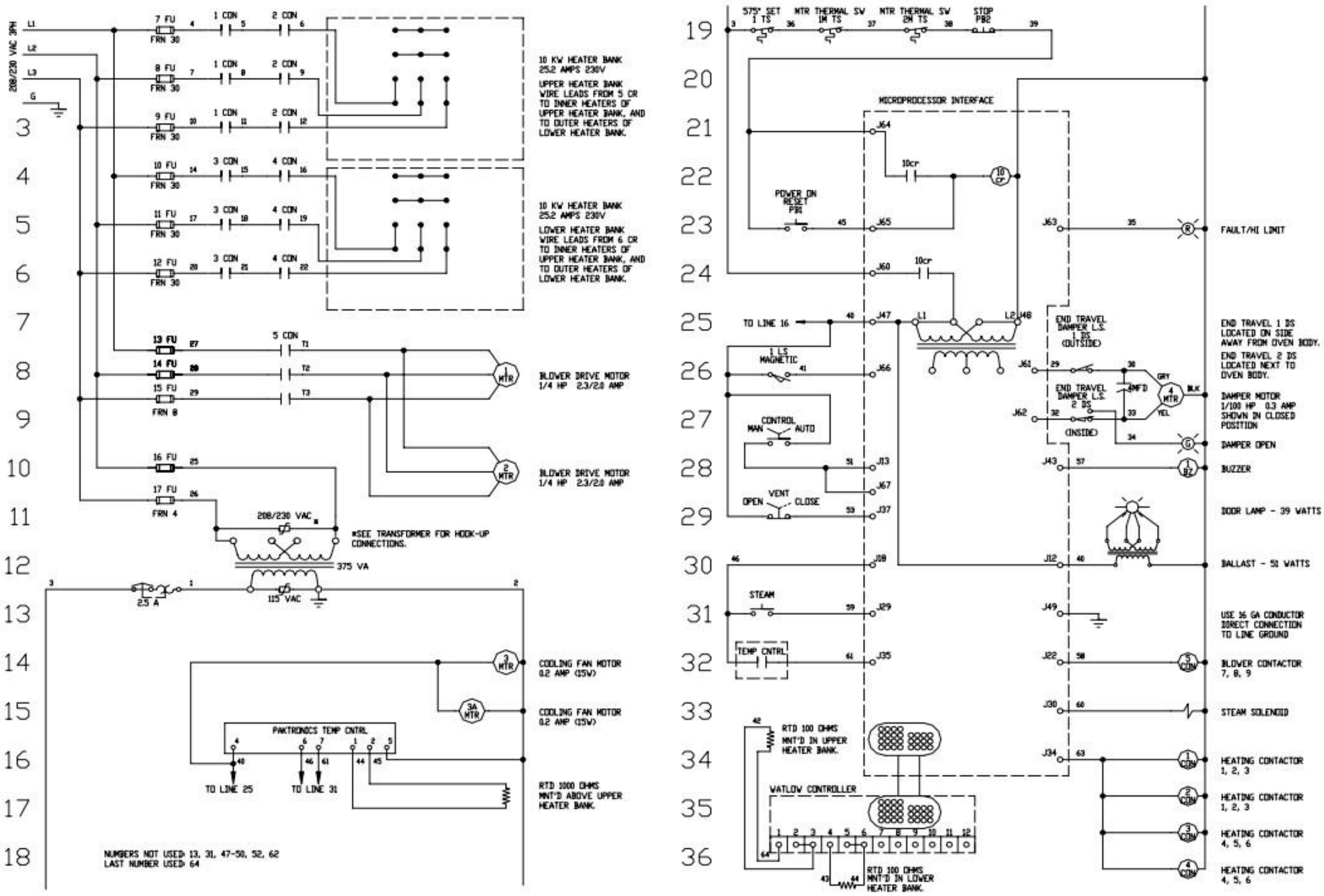

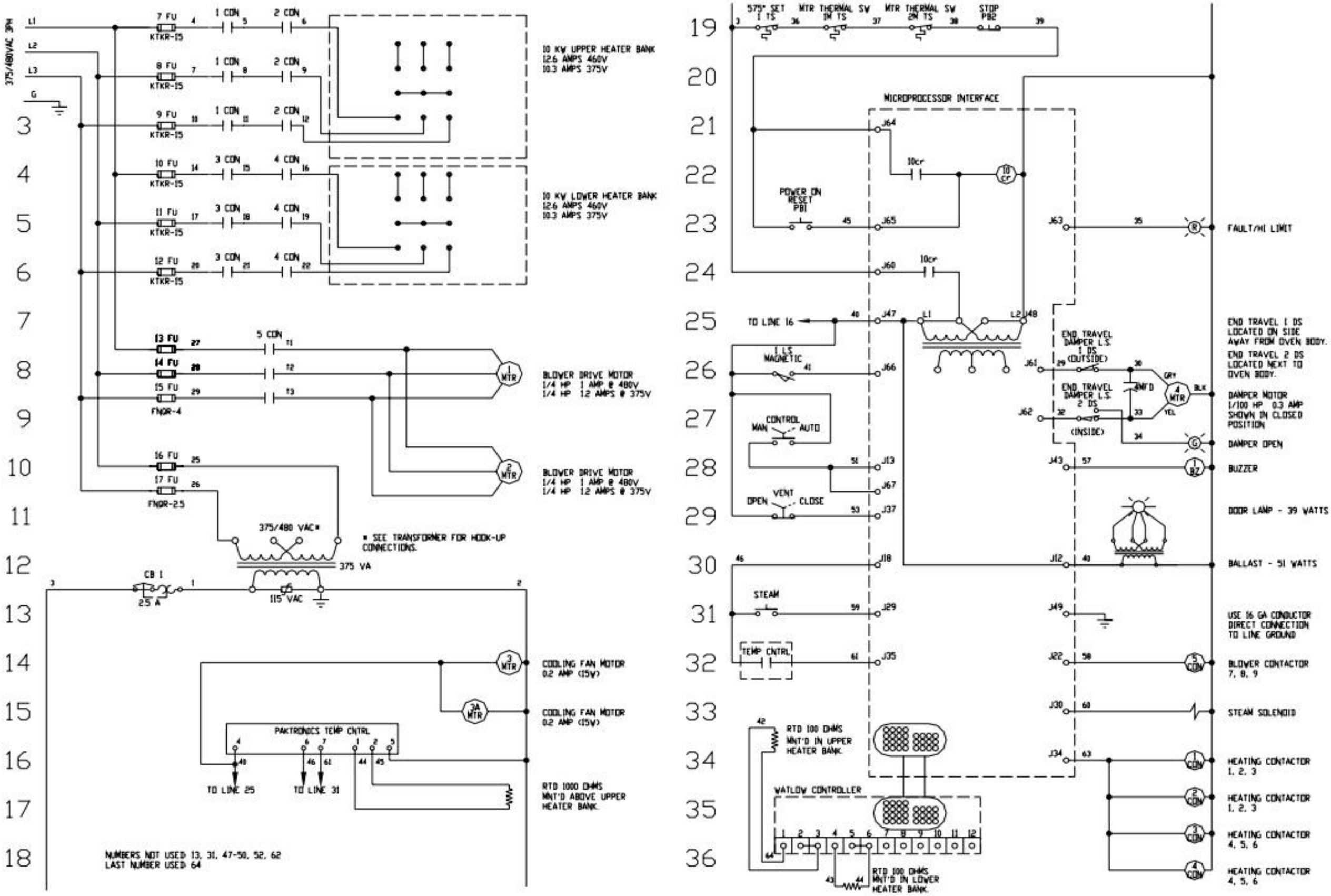
375/480VAC 3PH
L1
L2
L3
G
7 FU
8 FU
9 FU
10 FU
11 FU
12 FU
KTKR-15
1 CON
2 CON
3 CON
4 CON
10 KW UPPER HEATER BANK
12.6 AMPS 460V
10.3 AMPS 375V
10 KW LOWER HEATER BANK
12.6 AMPS 460V
10.3 AMPS 375V
13 FU
14 FU
15 FU
FNQR-4
5 CON
BLOWER DRIVE MOTOR
1/4 HP 1 AMP @ 480V
1/4 HP 1.2 AMPS @ 375V
16 FU
17 FU
FNQR-2.5
375/480 VAC*
* SEE TRANSFORMER FOR HOOK-UP CONNECTIONS.
375 VA
CB 1
2.5 A
115 VAC
COOLING FAN MOTOR
0.2 AMP (15W)
PAKTRONICS TEMP CNTRL
TO LINE 25
TO LINE 31
RTD 1000 OHMS
MNT'D ABOVE UPPER HEATER BANK.
NUMBERS NOT USED 13, 31, 47-50, 52, 62
LAST NUMBER USED 64
575° SET
1 TS
MTR THERMAL SW
1M TS
MTR THERMAL SW
2M TS
STOP
PB2
MICROPROCESSOR INTERFACE
POWER ON
RESET
PB1
10cr
TO LINE 16
1 LS
MAGNETIC
CONTROL
MAN
AUTO
VENT
OPEN
CLOSE
STEAM
TEMP CNTRL
RTD 100 OHMS
MNT'D IN UPPER
HEATER BANK
WATLOW CONTROLLER
RTD 100 OHMS
MNT'D IN LOWER
HEATER BANK.
END TRAVEL
DAMPER L.S.
1 DS
(OUTSIDE)
END TRAVEL
DAMPER L.S.
2 DS
(INSIDE)
FAULT/HI LIMIT
END TRAVEL 1 DS
LOCATED ON SIDE
AWAY FROM OVEN BODY.
END TRAVEL 2 DS
LOCATED NEXT TO
OVEN BODY.
DAMPER MOTOR
1/100 HP 0.3 AMP
SHOWN IN CLOSED
POSITION
DAMPER OPEN
BUZZER
DOOR LAMP - 39 WATTS
BALLAST - 51 WATTS
USE 16 GA CONDUCTOR
DIRECT CONNECTION
TO LINE GROUND
BLOWER CONTACTOR
7, 8, 9
STEAM SOLENOID
HEATING CONTACTOR
1, 2, 3
HEATING CONTACTOR
1, 2, 3
HEATING CONTACTOR
4, 5, 6
HEATING CONTACTOR
4, 5, 6

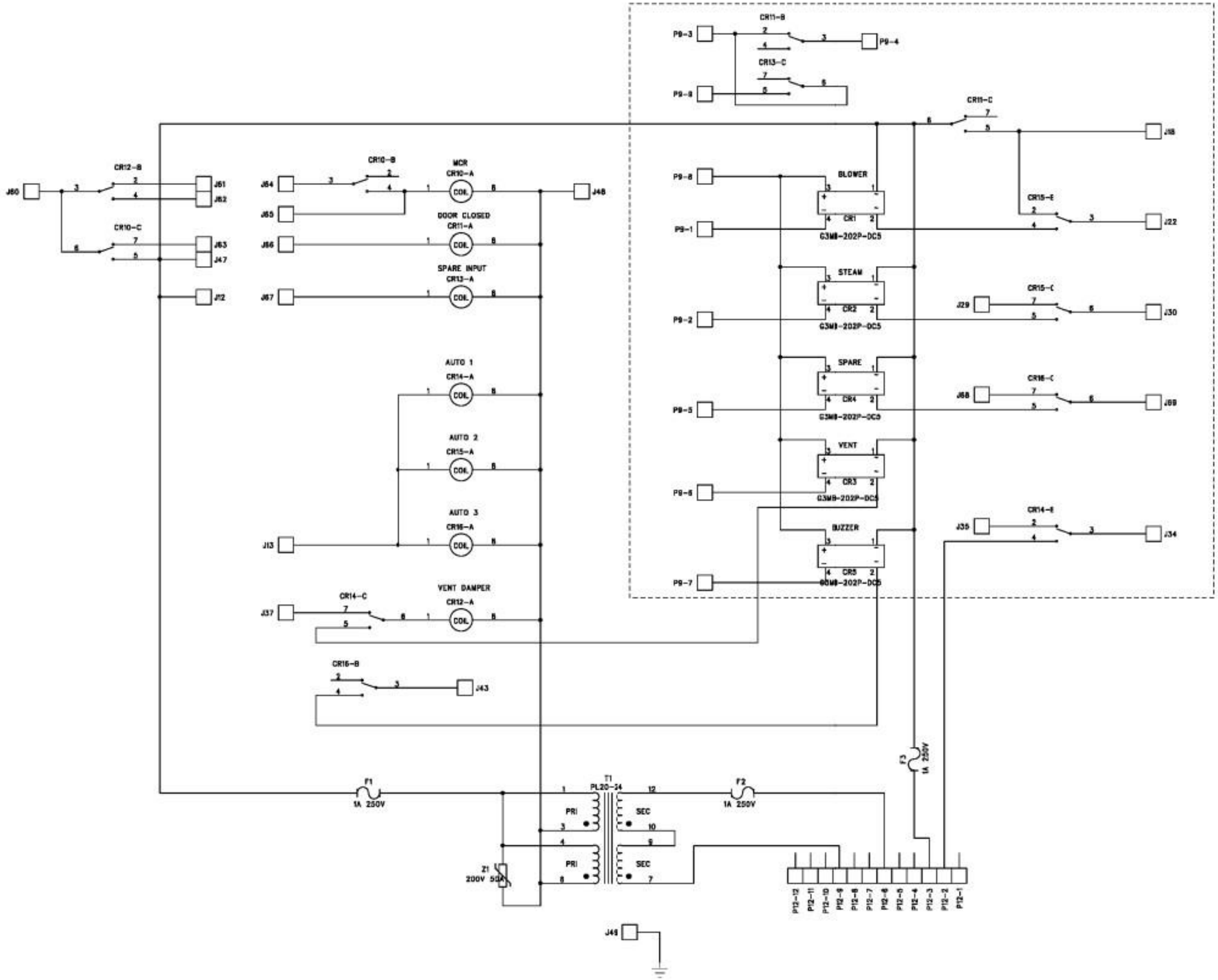
CR11-B
P9-3
P9-4
CR13-C
P9-9
CR11-C
J58
P9-8
BLOWER
CR1
G3MB-202P-DC5
CR15-E
J22
P9-1
STEAM
CR2
G3MB-202P-DC5
CR15-C
J29
J30
P9-2
SPARE
CR4
G3MB-202P-DC5
CR16-C
J68
J69
P9-5
VENT
CR3
G3MB-202P-DC5
P9-6
CR14-E
J35
J34
BUZZER
CR5
G3MB-202P-DC5
P9-7
J60
CR12-B
J61
J62
CR10-C
J63
J47
J12
J54
CR10-B
MCR
CR10-A
COIL
J48
J55
DOOR CLOSED
CR11-A
J56
SPARE INPUT
CR13-A
J57
AUTO 1
CR14-A
AUTO 2
CR15-A
AUTO 3
CR16-A
J13
VENT DAMPER
CR12-A
J37
CR14-C
CR16-B
J43
F1
1A 250V
T1
PL20-24
PRI
SEC
F2
1A 250V
F3
1A 250V
Z1
200V 50A
P12-12
P12-11
P12-10
P12-9
P12-8
P12-7
P12-6
P12-5
P12-4
P12-3
P12-2
P12-1
J49