Parts Breakdown

Model BB-CN-0012E-GH *59058*

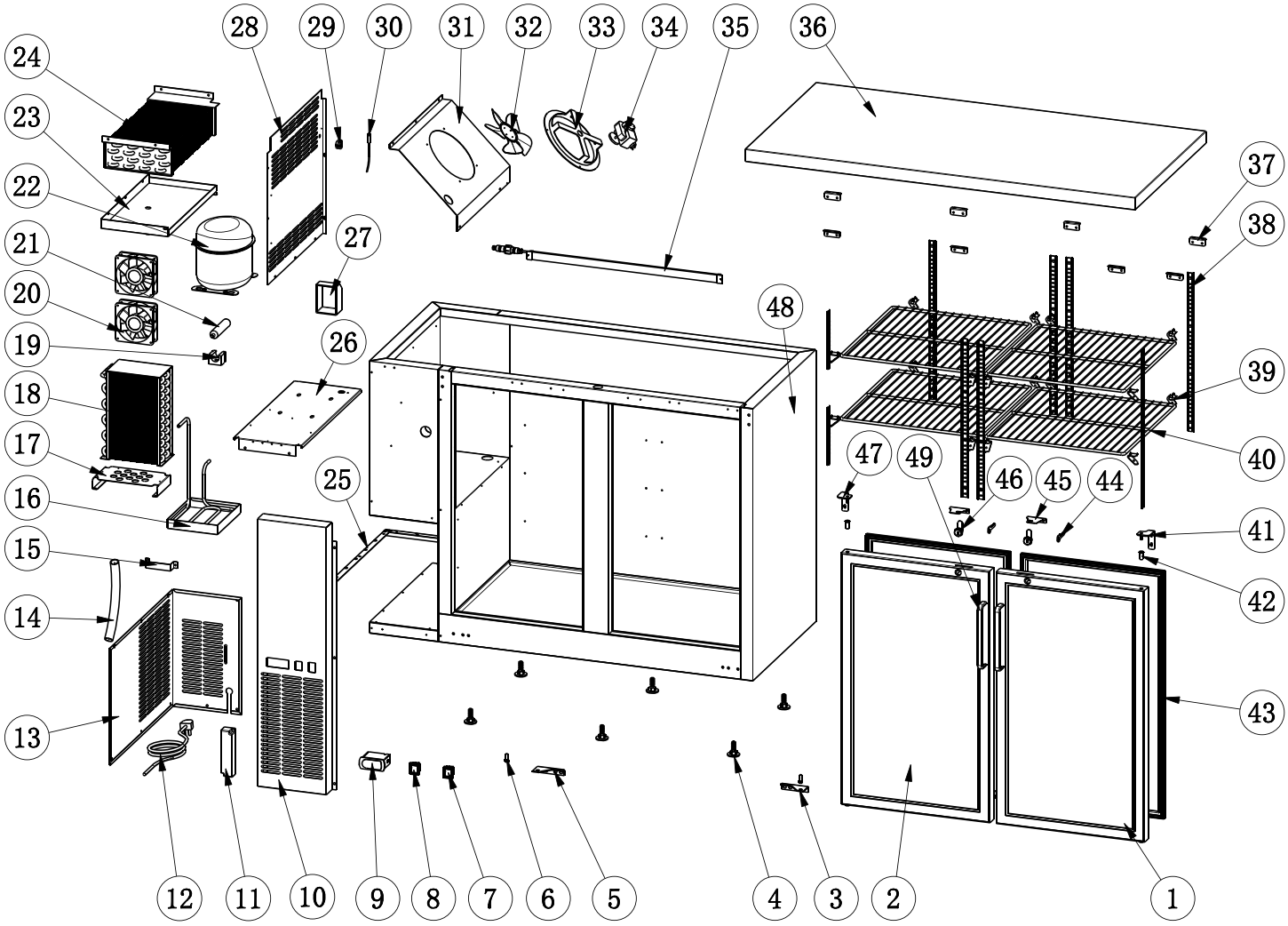

Parts Breakdown

Model BB-CN-0012E-GH *59058*

Item No.	Description	Position
AA357	Right Glass Door for 59058	1
AA358	Left Glass Door for 59058	2
61468	Left Bottom Hinge for 59058	3
AA185	Leveling Feet for 59058	4
AA360	Bottom Left Hinge for 59058	5
AA361	Bottom Hinge Axis for 59058	6
AA124	Power Switch for 59058	7
AA362	LED Light Switch for 59058	8
27185	Carel Controller PJEZ for 59058	9
AF776	Control Panel for 59058	10
AM179	LED Power Supply for 59058	11
AA365	Power Cord for 59058	12
AF777	Back Grill for 59058	13
AA216	Drain Tube for 59058	14
AB974	Handle of Compressor Installation Board for 59058	15
AF087	Outer Drain Pan for 59058	16

Item No.	Description	Position
AF778	Condenser Installation Board for 59058	17
AA155	Condenser for 59058	18
AB595	Filter Fixer for 59058	19
AA128	Condenser Fan Motor for 59058	20
AA371	Filter for 59058	21
AF088	Compressor for 59058	22
AI396	Inner Drain Pan for 59058	23
AI397	Evaporator for 59058	24
AF780	Fixed Mounts for Back Grill for 59058	25
AF781	Compressor Installation Board for 59058	26
AF820	Evaporator Cover for 59058	28
AA378	Temperature Probe Fixer for 59058	29
AA379	Temperature Probe for 59058	30
AF783	Evaporator Fan Installation Board for 59058	31
AA962	Blade of Evaporator Fan Motor for 59058	32
AL936	Evaporator Fan Cover for 59058	33

Item No.	Description	Position
AM180	Evaporator Fan Motor for 59058	34
AM181	LED Light for 59058	35
AF821	Top Board for 59058	36
AF764	Top Board Fixer for 59058	37
AF176	K Strip-4 Holes for 59058	38
26884	K Clip for 59058	39
AA386	Shelf for 59058	40
AA436	Upper Right Hinge for 59058	41
AA388	Axis Cover for 59058	42
AA389	Gasket for 59058	43
AA390	Key for 59058	44
AF761	Lock Plate for 59058	45
AA392	Lock for 59058	46
AF786	Upper Light Hinge for 59058	47
AA395	Glass Door Handle for 59058	49