Curved Display Warmer Showcase

Model DW-CN-0006

Item 43119

Instruction Manual

STOP

DO NOT RETURN THIS PRODUCT TO THE STORE

For questions or assistance with this product call OMCAN Toll Free: 1 800 465 0234 Customer Service or visit the Support section of www.omcan.com

Revised - 04/26/2019

LOCALLY QPS APPROVED

Toll Free: 1-800-465-0234

Fax: 905-607-0234

Email: service@omcan.com

www.omcan.com

MADE IN CHINA

NEMA
5 - 15
125 VAC / 15 AMP
RECEPTACLE

Table of Contents

Model DW-CN-0006

Section	Page
General Information	3 - 4
Safety and Warranty	4 - 6
Technical Specifications	6
Installation	6
Operation	6 - 7
Maintenance	7
Parts Breakdown	8 - 9
Electrical Schematics	10
Warranty Registration	11

General Information

Omcan Manufacturing and Distributing Company Inc., Food Machinery of America, Inc. dba Omcan and Omcan Inc. are not responsible for any harm or injury caused due to any person's improper or negligent use of this equipment. The product shall only be operated by someone over the age of 18, of sound mind, and not under the influence of any drugs or alcohol, who has been trained in the correct operation of this machine, and is wearing authorized, proper safety clothing. Any modification to the machine voids any warranty, and may cause harm to individuals using the machine or in the vicinity of the machine while in operation.

CHECK PACKAGE UPON ARRIVAL

Upon receipt of an Omcan shipment please inspect for external damage. If no damage is evident on the external packaging, open carton to ensure all ordered items are within the box, and there is no concealed damage to the machine. If the package has suffered rough handling, bumps or damage (visible or concealed), please note it on the bill of lading before accepting the delivery and contact Omcan within 24 hours, so we may initiate a claim with the carrier. A detailed report on the extent of the damage caused to the machine must be filled out within three days, from the delivery date shown in the shipping documents. Omcan has no recourse for damaged products that were shipped collect or third party.

Before operating any equipment, always read and familiarize yourself with all operation and safety instructions.

Omcan would like to thank you for purchasing this machine. It's of the utmost importance to save these instructions for future reference. Also save the original box and packaging for shipping the equipment if servicing or returning of the machine is required.

Omcan Fabrication et distribution Companie Limité et Food Machinery d'Amerique, dba Omcan et Omcan Inc. ne sont pas responsables de tout dommage ou blessure causé du fait que toute personne ait utilisé cet équipement de façon irrégulière. Le produit ne doit être exploité que par quelqu'un de plus de 18 ans, saine d'esprit, et pas sous l'influence d'une drogue ou d'acohol, qui a été formé pour utiliser cette machine correctement, et est vêtu de vêtements de sécurité approprié. Toute modification de la machine annule toute garantie, et peut causer un préjudice à des personnes utilisant la machine ou des personnes à proximité de la machine pendant son fonctionnement.

VÉRIFIEZ LE COLIS DÈS RÉCEPTION

Dès réception d'une expédition d'Omcan veuillez inspecter pour dommages externes. Si aucun dommage n'est visible sur l'emballage externe, ouvrez le carton afin de s'assurer que tous les éléments commandés sont dans la boîte, et il n'y a aucun dommage dissimulé à la machine. Si le colis n'a subi aucune mauvaises manipulations, de bosses ou de dommages (visible ou cachée), notez-le sur le bond de livraison avant d'accepter la livraison et contactez Omcan dans les 24 heures qui suivent, pour que nous puissions engager une réclamation auprès du transporteur. Un rapport détaillé sur l'étendue des dommages causés à la machine doit être rempli dans un délai de trois jours, à compter de la date de livraison indiquée dans les documents d'expédition. Omcan n'a aucun droit de recours pour les produits endommagés qui ont été expédiées ou cueilli par un tiers transporteur.

General Information

Avant d'utiliser n'importe quel équipement, toujours lire et vous familiariser avec toutes les opérations et les consignes de sécurité.

Omcan voudrais vous remercier d'avoir choisi cette machine. Il est primordial de conserver ces instructions pour une référence ultérieure. Également conservez la boîte originale et l'emballage pour l'expédition de l'équipement si l'entretien ou le retour de la machine est nécessaire.

Omcan Empresa De Fabricacion Y Distribucion Inc. Y Maquinaria De Alimentos De America, Inc. dba Omcan y Omcan Inc. no son responsables de ningun daño o perjuicío causado por cualquier persona inadecuada o el uso descuidado de este equipo. El producto solo podra ser operado por una persona mayor de 18 años, en su sano juicio y no bajo alguna influencia de droga o alcohol, y que este ha sido entrenado en el correcto funcionamiento de esta máquina, y ésta usando ropa apropiada y autorizada. Cualquier modificación a la máquina anúla la garantía y puede causar daños a las personas usando la máquina mientras esta en el funcionamiento.

REVISE EL PAQUETE A SU LLEGADA

Tras la recepcion de un envio Omcan favor inspeccionar daños externos. Si no hay daños evidentes en el empaque exterior, Habra el carton para asegurararse que todos los articulos solicitados ésten dentro de la caja y no encuentre daños ocultos en la máquina. Si el paquete ha sufrido un manejo de poco cuidado, golpes o daños (visible o oculto) por favor anote en la factura antes de aceptar la entrega y contacte Omcan dentro de las 24 horas, de modo que podamos iniciar una reclamación con la compañia. Un informe detallado sobre los daños causados a la máquina debe ser llenado en el plazo de tres días, desde la fecha de entrega que se muestra en los documentos de envío. Omcan no tiene ningun recurso por productos dañados que se enviaron a recoger por terceros.

Antes de utilizar cualquier equipo, siempre lea y familiarizarse con todas las instrucciones de funcionamiento y seguridad.

Omcan le gustaría darle las gracias por la compra de esta máquina. Es de la mayor importancia para salvar estas instrucciones para futuras consultas. Además, guarda la caja original y el embalaje para el envío del equipo si servicio técnico o devolución de la máquina que se requiere.

Safety and Warranty

- To prevent hazards and to ensure optimum efficiency, no modifications or alterations to the device that are not explicitly approved by the manufacturer may be undertaken. This device may only be operated in technically proper and safe condition.
- The device should be never left unattended during operation. Keep away children.
- Preserve this manual safely. When passing on/selling the device to a third party, the manuals must be handed over along with the device.
- Every person using the device must act in accordance to the manuals and under consideration of the

safety advice.
- The device is to be used indoors only.
- Any technical interventions, as well as assembly and maintenance are to be made by a qualified customer service only.
- This appliance is not intended for use by persons (including children) with reduced physical, sensory or mental capabilities, or lack of experience and knowledge, unless they have been given supervision or instruction concerning use of the appliance by a person responsible for their safety. Children should be supervised to ensure that they do not play with the appliance.
- Children should be supervised to ensure that they do not play with the appliance.
- The operation manual is not suitable for the persons (including children) with reduced physical, sensory or mental capabilities, or lack of experience and knowledge.

Exclusive power socket
The power receptacle must have a reliable grounded connection. Never let the device share the power socket with any other appliances, otherwise the cable will become hot and fire might be resulted.

Protect cables
Never break or damage the cables otherwise sparks and fire might be resulted.

No water flushing
Never wash the surface of the machine with water, otherwise electrocution might be resulted.

Prevent from flammables and explosive
Never put any flammable or explosive items inside or nearby the device such as ether, gasoline, alcohol, adhesive, ect.

1 YEAR PARTS AND LABOUR BENCH WARRANTY

Within the warranty period, contact Omcan Inc. at 1-800-465-0234 to schedule a drop off to either an Omcan authorized service depot in the area, or to an Omcan Service warehouse to repair the equipment.

Unauthorized maintenance will void the warranty. Warranty covers electrical and part failures, not improper use.

Please see https://omcan.com/disclaimer for complete info.

WARNING:

The packaging components are classified as normal solid urban waste and can therefore be disposed of without difficulty.

In any case, for suitable recycling, we suggest disposing of the products separately (differentiated waste) according to the current norms.

Safety and Warranty

DO NOT DISCARD ANY PACKAGING MATERIALS IN THE ENVIRONMENT!

Technical Specifications

Model	**DW-CN-0006**
Temperature Range	30° - 90°C / 86° - 194°F
Storage Volume	68 L / 2.4 cu. ft.
Rated Current	7A
Rated Input Power	800 W
Grade of Waterproof	IPX4
Pan Size	12.75” x 7” x 2” / 324 x 178 x 51mm
Electrical	110V / 60Hz / 1
Dimensions	16.5” x 44” x 13.2” / 419 x 1118 x 335mm
Weight	35 lbs. / 15.9 kgs.
Item Number	43119

Installation

- Place the device on top of an level and stable surface which supports the weight of the device and is not heat sensitive.
- Never place the device on an inflammable surface (such as table cloth, carpet, etc).
- You must not position the device near open fireplaces, electric ovens, arc furnaces, electric heaters or any other heat sources.
- Position the device in such a way that the plug is easily accessible.

Operation

- Before first use, clean the inner sides and the shelves with a soft cloth and a mild cleaning agent. Afterwards, dry the device thoroughly.
- Connect the device to a single grounded power socket.
- Set the temperature as required for respective foods. You may adjust the desired temperature in the range between 30°C - 90°C.
- The temperature inside of the hot display can be read from the front display.
- Dry heat, no water required.

Operation

- Put the foods in appropriate containers before placing them inside the hot display and close it by using the sliding door.
- Some of the device parts become very hot, always use safety gloves when placing or removing food.
- In order to place or remove foods. You may open the door at rear side.
- Switch on the inner light when required by using the light switch of the device.
- Disconnect the device from the power socket when the device is not in use.

Maintenance

- Before starting any repair or cleaning to the unit, make sure the device has been disconnected from the power socket and has cooled down completely.
- Don’t use any acidic agents and make sure no water touches the device.
- To protected yourself from electric shock, never immerse the device, its cables or the plug in water or other liquids.
- Don’t use any kind of pressure water jet for cleaning the device.

CLEANING

- The device should be cleaned regularly.
- Clean the device from the inside and outside with a soft, damp cloth and a mild cleaning agent.
- Clean the shelves and the housing with a soft, damp cloth and a mild cleaning agent.
- Only use a soft cloth and make sure you never use any kind of abrasive agents or pads which could scratch the surface.
- After the cleaning procedure, you should use a soft and dry cloth to wipe dry and polish the surface.
- Make sure the device has been cleaned properly before storing it in a dry place.

MAINTENANCE

- Check the plug from time to time to ensure it is not damaged in any way. Never use the device if the plug is damaged. If it is damaged, it must be replaced by a qualified electrician.
- Only a qualified technician should carry out repairs and maintenance of the device, Do not attempt to repair the device by yourself.

Cautions

Children should be supervised to ensure that they do not play with the appliance.

- If the supply cord is damaged, it must be replaced by the manufacturer, its service agent or similarly qualified persons in order to avoid a hazard.

REFERENCE

Item Number	Model Number	Description	Manufacturer Model Number
43119	DW-CN-0006	Display Warmer Showcase Curved Glass 6 Pans 110V/60Hz/1 cQPSus	RTR6

Parts Breakdown

Model DW-CN-0006 *43119*

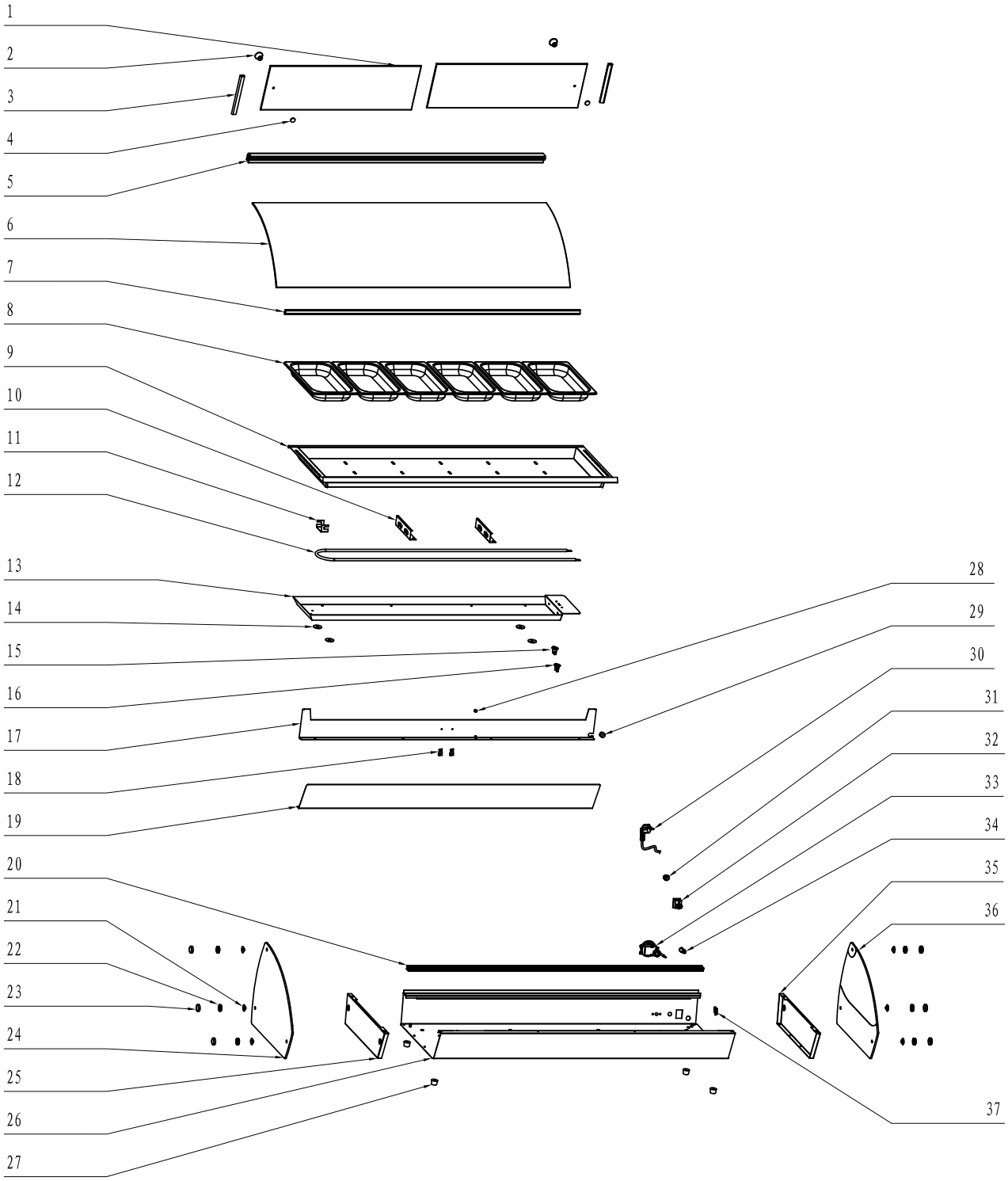

Parts Breakdown

Model DW-CN-0006 *43119*

Item No.	Description	Position
60185	Door Glass for RTR-6	1
60186	Door Handle for RTR-6	2
60187	A-Type Sealing Strip for RTR-6	3
60188	Nail for Glass for RTR-6	4
60189	Upper Plate for RTR-6	5
60190	Front Glass for RTR-6	6
60191	Sealing Strip for RTR-6	7
60192	1/3 GN Pans for RTR-6	8
60193	Stainless Steel Pans for RTR-6	9
60194	Heating Element Holder #1 for RTR-6	10
60195	Heating Element Holder #2 for RTR-6	11
60196	Heating Element for RTR-6	12
60197	Base Shield for RTR-6	13

Item No.	Description	Position
60198	Vibration Absorbing Gasket for RTR-6	14
60199	Thermostat for RTR-6	15
60200	Thermostat for RTR-6	16
60201	Back Shield for RTR-6	17
60202	Probe Pressing Plate for RTR-6	18
60203	Head Shield for RTR-6	19
60204	Front Pulley for RTR-6	20
60205	Big Gasket for Nut for RTR-6	21
60206	Decorating Gasket for Nut for RTR-6	22
60207	Decorating Parts for Nut for RTR-6	23
60208	Left Glass for RTR-6	24
60209	Left Plate for RTR-6	25
60210	Base Board for RTR-6	26

Item No.	Description	Position
60211	Rubber Feet for RTR-6	27
60212	Double-Faced Protective Ring C6 for RTR-6	28
60213	Double-Faced Protective Ring C12 for RTR-6	29
60214	Power Line for RTR-6	30
60215	Cable Clip for RTR-6	31
60216	Switch for RTR-6	32
60217	Thermostat for RTR-6	33
60218	Indicator Light for RTR-6	34
60219	Right Plate for RTR-6	35
60220	Right Glass for RTR-6	36
60221	Plug Type Fixer 17 for RTR-6	37

Electrical Schematics

Model DW-CN-0006 *43119*

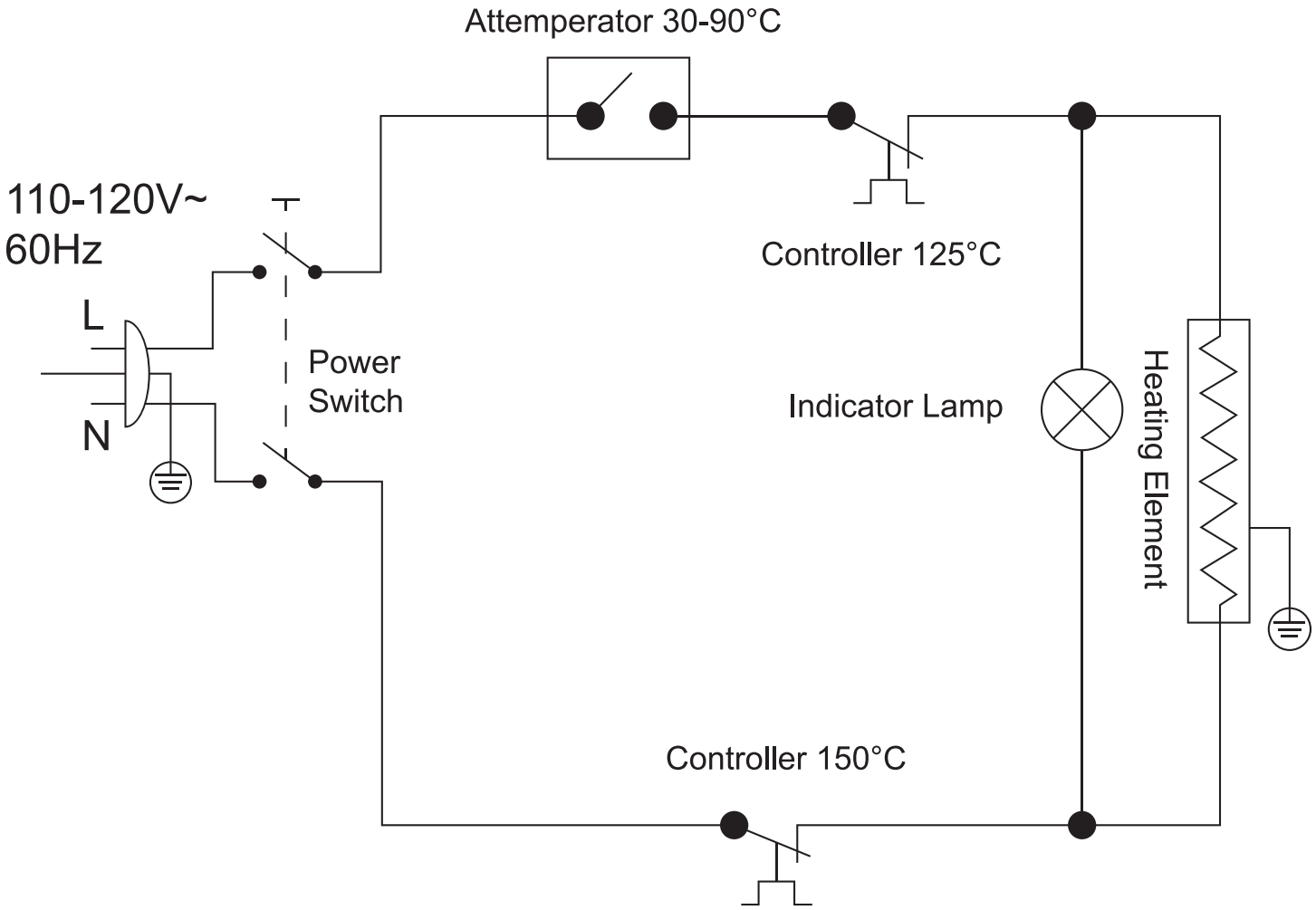

Warranty Registration

Thank you for purchasing an Omcan product. To register your warranty for this product, complete the information below, tear off the card at the perforation and then send to the address specified below. You can also register online by visiting:

Merci d'avoir acheté un produit Omcan. Pour enregistrer votre garantie pour ce produit, complétez les informations ci-dessous, détachez la carte au niveau de la perforation, puis l'envoyer à l'adresse spécifié ci-dessous. Vous pouvez également vous inscrire en ligne en visitant:

Gracias por comprar un producto Omcan usted. Para registrar su garantía para este producto, complete la información a continuación, cortar la tarjeta en la perforación y luego enviarlo a la dirección indicada a continuación. También puede registrarse en línea en:

https://omcan.com/warranty-registration/

For mailing in Canada

Pour postale au Canada

Por correo en Canadá

OMCAN
PRODUCT WARRANTY REGISTRATION
3115 Pepper Mill Court,
Mississauga, Ontario
Canada, L5L 4X5

For mailing in the US

Pour diffusion aux États-Unis

Por correo en los EE.UU.

OMCAN
PRODUCT WARRANTY REGISTRATION
4450 Witmer Industrial Estates, Unit 4,
Niagara Falls, New York
USA, 14305

or email to: service@omcan.com

Purchaser's Information

Name: _____

Address: _____

City: _____ Province or State: _____ Postal or Zip: _____

Country: _____

Dealer from which Purchased: _____

Dealer City: _____ Dealer Province or State: _____

Invoice: _____

Company Name: _____

Telephone: _____

Email Address: _____

Type of Company:

☐ Restaurant ☐ Bakery ☐ Deli

☐ Butcher ☐ Supermarket ☐ Caterer

☐ Institution *(specify)*: _____

☐ Other *(specify)*: _____

Model Name: _____ Model Number: _____ Serial Number: _____

Machine Description: _____

Date of Purchase (MM/DD/YYYY): _____ Date of Installation (MM/DD/YYYY): _____

Would you like to extend the warranty? ☐ Yes ☐ No

Thank you for choosing Omcan | Merci d'avoir choisi Omcan | Gracias por elegir Omcan

Since 1951 Omcan has grown to become a leading distributor of equipment and supplies to the North American food service industry. Our success over these many years can be attributed to our commitment to strengthen and develop new and existing relationships with our valued customers and manufacturers. Today with partners in North America, Europe, Asia and South America, we continually work to improve and grow the company. We strive to offer customers exceptional value through our qualified local sales and service representatives who provide convenient access to over 5,000 globally sourced products.

Depuis 1951 Omcan a grandi pour devenir un des “leaders” de la distribution des équipements et matériel pour l’industrie des services alimentaires en Amérique du Nord. Notre succès au cours de ces nombreuses années peut être attribué à notre engagement à renforcer et à développer de nouvelles et existantes relations avec nos clients et les fabricants de valeur. Aujourd’hui avec des partenaires en Amérique du Nord, Europe, Asie et Amérique du Sud, nous travaillons continuellement à améliorer et développer l’entreprise. Nous nous efforçons d’offrir à nos clients une valeur exceptionnelle grâce à nos ventes locales qualifiées et des représentants de service qui offrent un accès facile à plus de 5000 produits provenant du monde entier.

Desde 1951 Omcan ha crecido hasta convertirse en un líder en la distribución de equipos y suministros de alimentos en América del Norte industria de servicios. Nuestro éxito en estos años se puede atribuir a nuestro compromiso de fortalecer y desarrollar nuevas relaciones existentes con nuestros valiosos clientes y fabricantes. Hoy con socios de América del Norte, Europa, Asia y América del Sur, que trabajan continuamente para mejorar y crecer la empresa. Nos esforzamos por ofrecer a nuestros clientes valor excepcional a través de nuestro local de ventas y representantes de los servicios que proporcionan un fácil acceso a más de 5,000 productos con origen a nivel mundial.