Display Warmers

Models DW-CN-0025-L, 0045-L, 0080-L, 0115-L
Items 41868, 41870, 41872, 41873

Instruction Manual

STOP
DO NOT RETURN
THIS PRODUCT TO THE STORE

For questions or assistance with this product call OMCAN Toll Free:
1 800 465 0234
Customer Service
or
visit the Support section of
www.omcan.com

Revised - 03/29/2019

LOCALLY
QPS
APPROVED

Toll Free: 1-800-465-0234
Fax: 905-607-0234
Email: service@omcan.com
www.omcan.com

MADE IN CHINA

NEMA
5 - 15
125 VAC / 15 AMP
RECEPTACLE

Table of Contents

Model DW-CN-0025-L / Model DW-CN-0045-L
Model DW-CN-0080-L / Model DW-CN-0115-L

Section	Page
General Information	3 - 4
Safety and Warranty	4 - 5
Technical Specifications	6
Installation and Operation	6
Maintenance	7
Parts Breakdown	8 - 13
Electrical Schematics	14 - 15
Notes	16 - 18
Warranty Registration	19

General Information

Omcan Manufacturing and Distributing Company Inc., Food Machinery of America, Inc. dba Omcan and Omcan Inc. are not responsible for any harm or injury caused due to any person's improper or negligent use of this equipment. The product shall only be operated by someone over the age of 18, of sound mind, and not under the influence of any drugs or alcohol, who has been trained in the correct operation of this machine, and is wearing authorized, proper safety clothing. Any modification to the machine voids any warranty, and may cause harm to individuals using the machine or in the vicinity of the machine while in operation.

CHECK PACKAGE UPON ARRIVAL

Upon receipt of an Omcan shipment please inspect for external damage. If no damage is evident on the external packaging, open carton to ensure all ordered items are within the box, and there is no concealed damage to the machine. If the package has suffered rough handling, bumps or damage (visible or concealed), please note it on the bill of lading before accepting the delivery and contact Omcan within 24 hours, so we may initiate a claim with the carrier. A detailed report on the extent of the damage caused to the machine must be filled out within three days, from the delivery date shown in the shipping documents. Omcan has no recourse for damaged products that were shipped collect or third party.

Before operating any equipment, always read and familiarize yourself with all operation and safety instructions.

Omcan would like to thank you for purchasing this machine. It's of the utmost importance to save these instructions for future reference. Also save the original box and packaging for shipping the equipment if servicing or returning of the machine is required.

Omcan Fabrication et distribution Companie Limité et Food Machinery d'Amerique, dba Omcan et Omcan Inc. ne sont pas responsables de tout dommage ou blessure causé du fait que toute personne ait utilisé cet équipement de façon irrégulière. Le produit ne doit être exploité que par quelqu'un de plus de 18 ans, saine d'esprit, et pas sous l'influence d'une drogue ou d'acohol, qui a été formé pour utiliser cette machine correctement, et est vêtu de vêtements de sécurité approprié. Toute modification de la machine annule toute garantie, et peut causer un préjudice à des personnes utilisant la machine ou des personnes à proximité de la machine pendant son fonctionnement.

VÉRIFIEZ LE COLIS DÈS RÉCEPTION

Dès réception d'une expédition d'Omcan veuillez inspecter pour dommages externes. Si aucun dommage n'est visible sur l'emballage externe, ouvrez le carton afin de s'assurer que tous les éléments commandés sont dans la boîte, et il n'y a aucun dommage dissimulé à la machine. Si le colis n'a subi aucune mauvaises manipulations, de bosses ou de dommages (visible ou cachée), notez-le sur le bond de livraison avant d'accepter la livraison et contactez Omcan dans les 24 heures qui suivent, pour que nous puissions engager une réclamation auprès du transporteur. Un rapport détaillé sur l'étendue des dommages causés à la machine doit être rempli dans un délai de trois jours, à compter de la date de livraison indiquée dans les documents d'expédition. Omcan n'a aucun droit de recours pour les produits endommagés qui ont été expédiées ou cueilli par un tiers transporteur.

General Information

Avant d'utiliser n'importe quel équipement, toujours lire et vous familiariser avec toutes les opérations et les consignes de sécurité.

Omcan voudrais vous remercier d'avoir choisi cette machine. Il est primordial de conserver ces instructions pour une référence ultérieure. Également conservez la boîte originale et l'emballage pour l'expédition de l'équipement si l'entretien ou le retour de la machine est nécessaire.

Omcan Empresa De Fabricacion Y Distribucion Inc. Y Maquinaria De Alimentos De America, Inc. dba Omcan y Omcan Inc. no son responsables de ningun daño o perjuicío causado por cualquier persona inadecuada o el uso descuidado de este equipo. El producto solo podra ser operado por una persona mayor de 18 años, en su sano juicio y no bajo alguna influencia de droga o alcohol, y que este ha sido entrenado en el correcto funcionamiento de esta máquina, y ésta usando ropa apropiada y autorizada. Cualquier modificación a la máquina anúla la garantía y puede causar daños a las personas usando la máquina mientras esta en el funcionamiento.

REVISE EL PAQUETE A SU LLEGADA

Tras la recepcion de un envio Omcan favor inspeccionar daños externos. Si no hay daños evidentes en el empaque exterior, Habra el carton para asegurararse que todos los articulos solicitados ésten dentro de la caja y no encuentre daños ocultos en la máquina. Si el paquete ha sufrido un manejo de poco cuidado, golpes o daños (visible o oculto) por favor anote en la factura antes de aceptar la entrega y contacte Omcan dentro de las 24 horas, de modo que podamos iniciar una reclamación con la compañia. Un informe detallado sobre los daños causados a la máquina debe ser llenado en el plazo de tres días, desde la fecha de entrega que se muestra en los documentos de envío. Omcan no tiene ningun recurso por productos dañados que se enviaron a recoger por terceros.

Antes de utilizar cualquier equipo, siempre lea y familiarizarse con todas las instrucciones de funcionamiento y seguridad.

Omcan le gustaría darle las gracias por la compra de esta máquina. Es de la mayor importancia para salvar estas instrucciones para futuras consultas. Además, guarda la caja original y el embalaje para el envío del equipo si servicio técnico o devolución de la máquina que se requiere.

Safety and Warranty

- To prevent hazards and to ensure optimum efficiency, no modifications or alterations to the device that are not explicitly approved by the manufacturer may be undertaken.
- The device should be never left unattended during operation. Keep the device away from children.
- Keep this manual in a safe location. When passing on/selling the device to a third party, the manual must be handed over along with the device.
- Every person using the device must follow the safety warnings in this manual at all times.
- The device is to be used indoors only.

Safety and Warranty

- Any technical service, including assembly and maintenance are to be made by a qualified Omcan service technician only.
- This appliance is not intended for use by persons (including children) with reduced physical, sensory or mental capabilities, or lack of experience and knowledge, unless they have been given supervision or instruction concerning use of the appliance by a person responsible for their safety.
- Children should be supervised to ensure that they do not play with the appliance.

This device may only be operated in technically proper and safe condition.

Exclusive Power Socket The power receptacle must have a reliable grounded connection.	**No Share on Socket** Never let the device share the common socket with other appliance, otherwise the cable becomes hot and fire might be resulted.
Protect Cables Never break or damage the cables otherwise current leakage and fire might be resulted.	**No Water Flushing** Never give the device surface a flush otherwise current leakage might be resulted.
Prevent from Flammables and Explosive Never put any flammable or explosive inside the device such as ether, gasoline, alcohol, adhesive and explosive. Never put dangerous product nearby the device.	

1 YEAR PARTS AND LABOR BENCH WARRANTY

Within the warranty period, contact Omcan Inc. at 1-800-465-0234 to schedule a drop off to either an Omcan authorized service depot in the area, or to an Omcan Service warehouse to repair the equipment.

Unauthorized maintenance will void the warranty. Warranty covers electrical and part failures, not improper use.

Please see https://omcan.com/disclaimer for complete info.

WARNING:

The packaging components are classified as normal solid urban waste and can therefore be disposed of without difficulty.

In any case, for suitable recycling, we suggest disposing of the products separately (differentiated waste) according to the current norms.

DO NOT DISCARD ANY PACKAGING MATERIALS IN THE ENVIRONMENT!

Technical Specifications

Model	DW-CN-0025-L	DW-CN-0045-L	DW-CN-0080-L	DW-CN-0115-L
Temperature Range	30 - 90°C / 86 - 194°F			
Input Power	800 W		1000 W	1300 W
Electrical	110V / 60 Hz / 1			
Storage Capacity	25 L / 0.9 cu. ft.	45 L / 1.6 cu. ft.	80 L / 2.8 cu. ft.	115 L / 4.1 cu. ft.
Weight	26.5 lbs. / 12 kgs.	31 lbs. / 14 kgs.	36.2 lbs. / 16.4 kgs.	43.4 lbs. / 19.7 kgs.
Dimensions	22” x 15” x 12” 554 x 376 x 311mm	22” x 15” x 15” 554 x 376 x 376mm	27.6” x 15.8” x 14.8” 700 x 400 x 376mm	27.6” x 15.8” x 19.5” 700 x 400 x 500mm
Item Number	41868	41870	41872	41873

Installation and Operation

INSTALLATION

- Place the device on top of an even and stable surface which supports the weight of the device and is not heat sensitive.
- At no time should you place the device on an inflammable surface (such as table cloth, carpet, ect).
- You must not position the device near an open fireplace, electric oven/arc furnace/electric heater or other heat sources.
- Position the device in such a way that the plug is easily accessible.

OPERATION

- Before the first use, clean the inner sides and the placing grids with a soft cloth and a mild cleaning agent. Afterwards, dry the device thoroughly.
- Remove the water bowl from the device and fill it.
- Connect the device to a single grounded power socket.
- Set the temperature as required for respective foods. You may adjust the desired temperature in the range between 30 - 90°C.
- The temperature inside of the hot display can be read from the front display.
- Put the foods in appropriate containers before placing them inside the hot display and shut it by using the sliding door.
- Some of the parts can become very hot, always use safety gloves when placing or removing foods.
- The food is kept warm at the temperature set by you previously.
- In order to place or remove foods, you may open the door on the back of the unit.
- The inner light can be turned on at any time by using the light switch on the device.
- Disconnect the device from the power socket when the device is not in use.

Maintenance

- Before starting any repair or cleaning, make sure the device has been disconnected from the power socket and has cooled down completely.
- Don't use any acidic agents and make sure no water enters the device.
- To protected yourself from electric shock, never immerse the device, its cables or the plug in water or other liquids.
- Do not use a pressured water jet to clean.

CLEANING

- The device should be cleaned regularly.
- Clean the unit and placing grids with a soft, damp cloth and a mild cleaning agent.
- Clean the water bowl regularly. Calcifications on the water bowl may be removed with common agents or liquids.
- Only use a soft cloth and make sure you never use any kind of abrasive agents or pads which could scratch the surface.
- After the cleaning procedure, you should use a soft and dry cloth to wipe the surface.
- Make sure the device has been cleaned properly before storing it in a dry place.

MAINTENANCE

- Check the main power cable from time to time to ensure it is not damaged in any way. Never use the device if it is damaged. If the power cable is damaged, it must be replaced by a qualified electrician.
- Only a qualified technician should carry out repairs and maintenance of the device. Do not attempt to repair the device by yourself.

REFERENCE

Item Number	Model Number	Description	Manufacturer Model Number
41868	DW-CN-0025-L	Display Warmer 25L - Front Curved Glass 110V/60Hz cQPSus	RTR-25L
41870	DW-CN-0045-L	Display Warmer 45L - Front Curved Glass 110V/60Hz cQPSus	RTR-45L
41872	DW-CN-0080-L	Display Warmer 80L - 4 Hinged Door Square Glass 110V/60Hz cQPSus	RTR-80L
41873	DW-CN-0115-L	Display Warmer 115L - 6 Hinged Door Square Glass 110V/60Hz cQPSus	RTR-115L

Parts Breakdown

Model DW-CN-0025-L *41868*

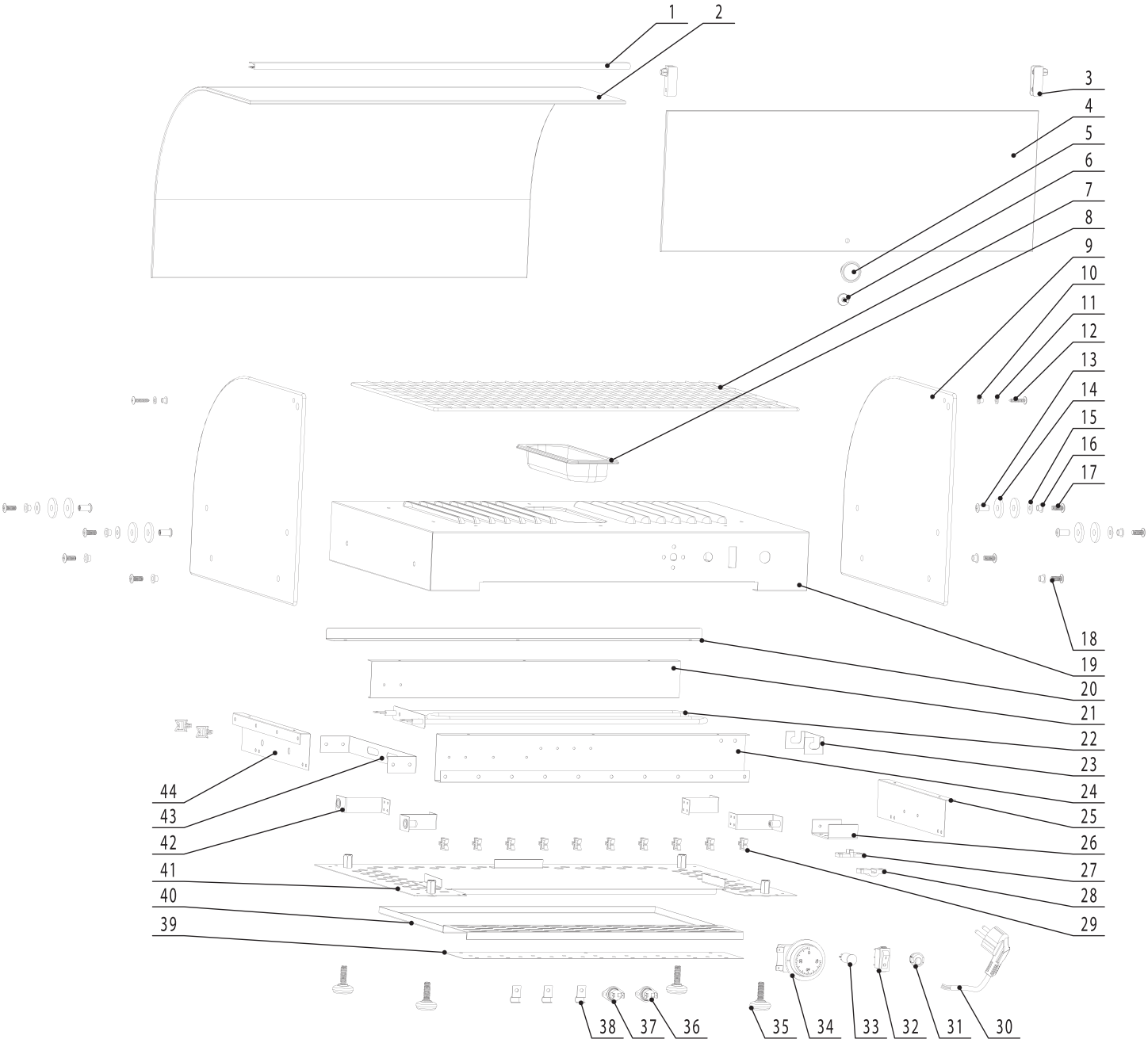

Parts Breakdown

Model DW-CN-0045-L *41870*

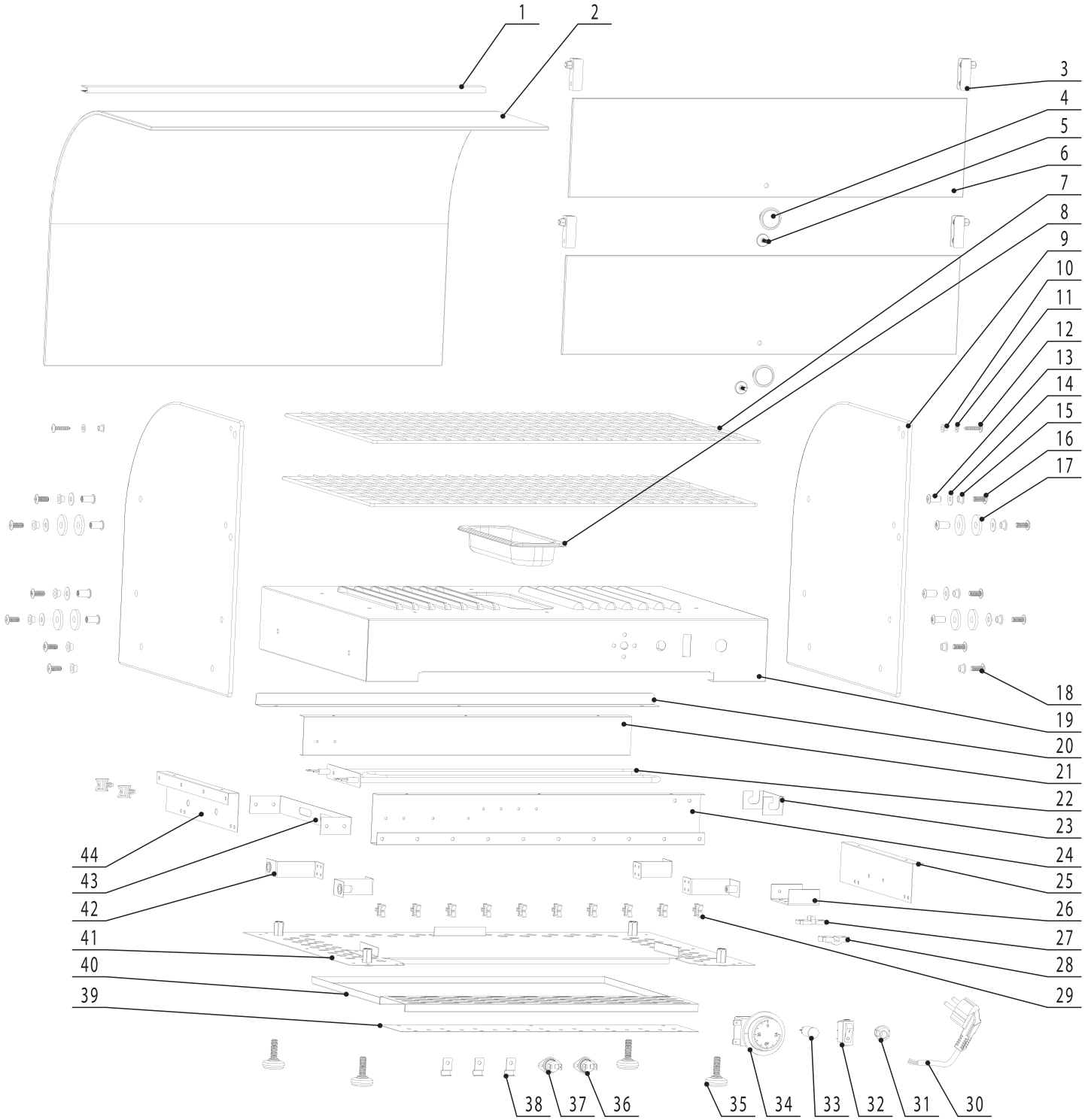

Parts Breakdown

Model DW-CN-0080-L *41872*

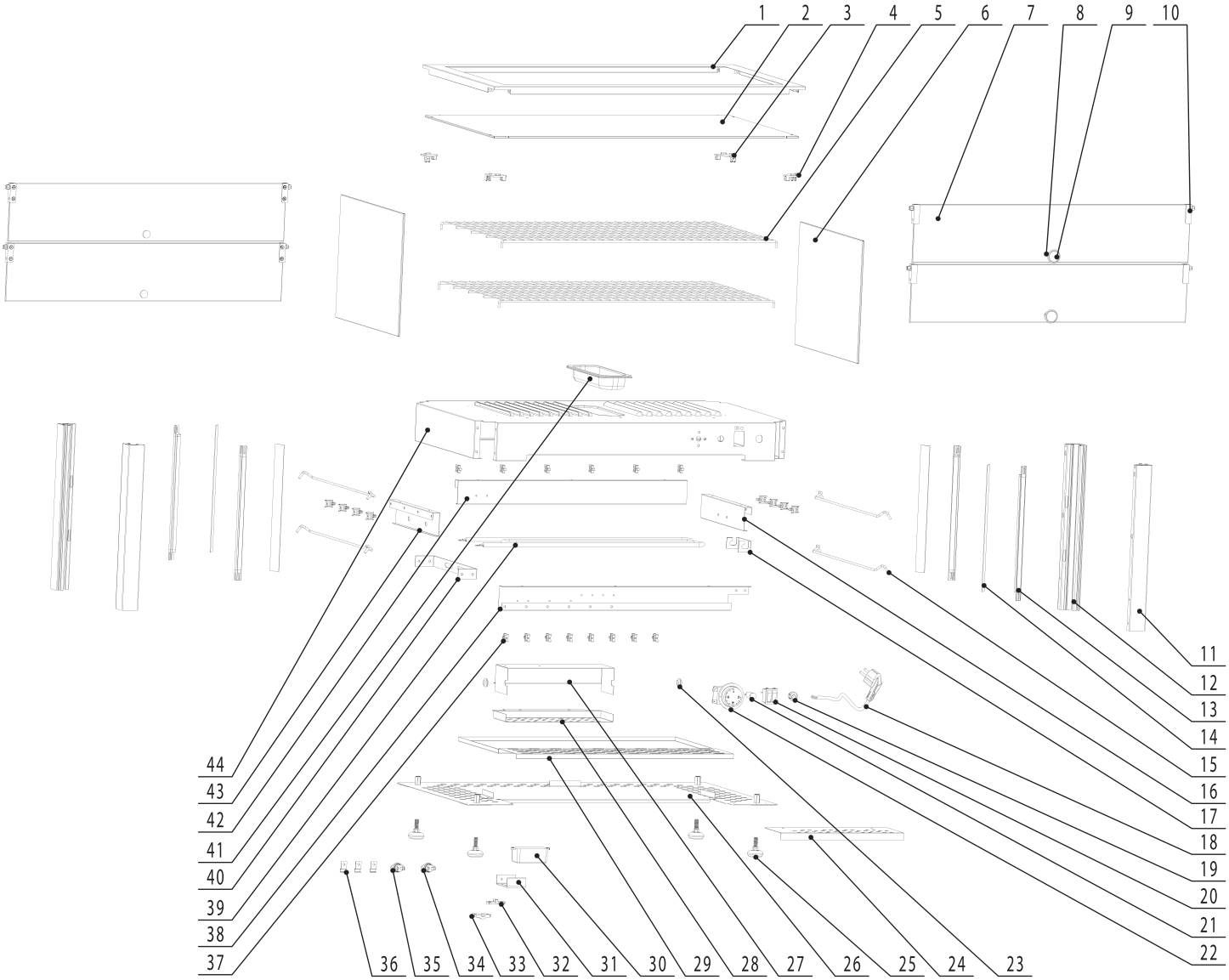

Parts Breakdown

Model DW-CN-0115-L *41873*

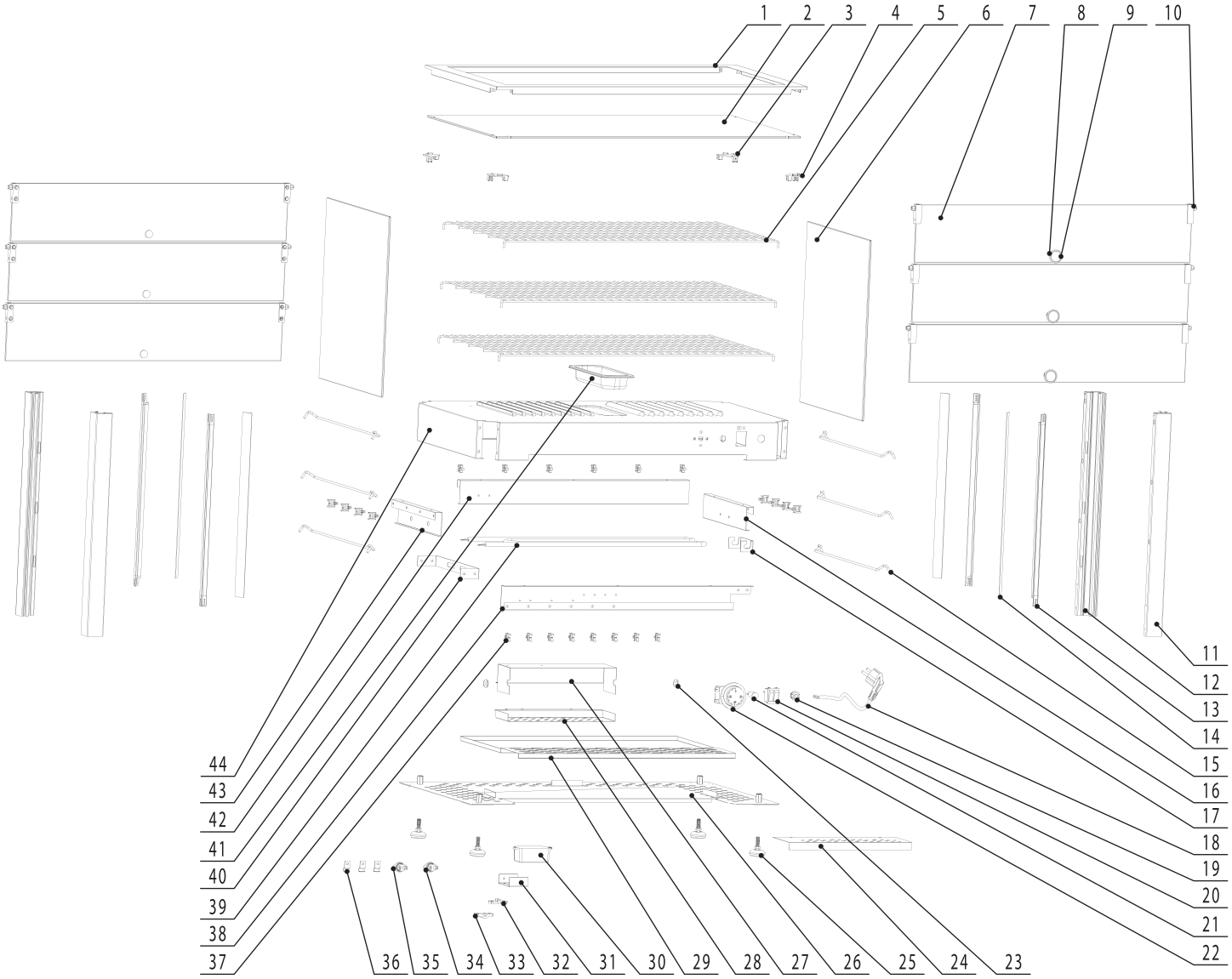

Parts Breakdown

Model DW-CN-0025-L *41868*

Item No.	Description	Position
69075	Glass Bracket for RTR-25L	1
78072	Curved Glass for RTR-25L	2
69076	Hinge for RTR-25L	3
78110	Door Glass for RTR-25L	4
78035	Handle for RTR-25L	5
78034	Nail for Glass for RTR-25L	6
78077	Shelf for RTR-25L	7
60735	Water Receiver for RTR-25L	8
78079	Side Glass for RTR-25L	9
69077	T-Type Washer M5 for RTR-25L	10
69078	Washer M5 for RTR-25L	11
69079	Stainless Steel Screws for RTR-25L	12
69080	Nut M6x15 for RTR-25L	13
60198	Vibration Absorbing Gasket for RTR-25L	14

Item No.	Description	Position
69081	Stainless Steel Flat Washer 6x16x1 for RTR-25L	15
69082	T-Type Washer M6 for RTR-25L	16
69083	Screw M6x15 for RTR-25L	17
69084	Screw M6x20 for RTR-25L	18
69085	Middle Panel for RTR-25L	19
78080	Baseboard Hanger for RTR-25L	20
78081	Front Panel for RTR-25L	21
69086	Heating Element for RTR-25L	22
78043	Heating Element Frame for RTR-25L	23, 43
78083	Rear Panel for RTR-25L	24
69087	Right Panel for RTR-25L	25
78056	Cable Clip Fixer for RTR-25L	26
60117	Base of Cable Clip for RTR-25L	27
60116	Cover of Cable Clip for RTR-25L	28

Item No.	Description	Position
78121	Plug-Type Fixer for RTR-25L	29
60214	Power Line for RTR-25L	30
79291	Wire Clip for RTR-25L	31
30597	Switch for RTR-25L	32
60218	Indicator Light for RTR-25L	33
78061	Probe Pressing Plate for RTR-25L	34, 38
60181	Adjustable Feet for RTR-25L	35
71661	Control 150°C for RTR-25L	36
71662	Control 125°C for RTR-25L	37
78097	Baffle for RTR-25L	39
78098	Drawer for RTR-25L	40
69088	Baseboard for RTR-25L	41
69089	Panel Bracket for RTR-25L	42
69090	Right Panel for RTR-25L	44

Model DW-CN-0045-L *41870*

Item No.	Description	Position
69075	Glass Bracket for RTR-45L	1
78106	Curved Glass for RTR-45L	2
69076	Hinge for RTR-45L	3
78035	Handle for RTR-45L	4
78034	Nail for Glass for RTR-45L	5
78110	Door Glass for RTR-45L	6
78077	Shelf for RTR-45L	7
60735	Water Receiver for RTR-45L	8
78113	Side Glass for RTR-45L	9
69077	T-Type Washer M5 for RTR-45L	10
69078	Washer M5 for RTR-45L	11
69079	Stainless Steel Screws for RTR-45L	12
69080	Nut M6x15 for RTR-45L	13
69081	Stainless Steel Flat Washer 6x16x1 for RTR-45L	14

Item No.	Description	Position
69082	T-Type Washer M6 for RTR-45L	15
69083	Screw M6x15 for RTR-45L	16
60198	Vibration Absorbing Gasket for RTR-45L	17
69084	Screw M6x20 for RTR-45L	18
69085	Middle Panel for RTR-45L	19
78080	Baseboard Hanger for RTR-45L	20
78081	Front Panel for RTR-45L	21
69086	Heating Element for RTR-45L	22
78043	Heating Element Frame for RTR-45L	23, 43
78083	Rear Panel for RTR-45L	24
69087	Right Panel for RTR-45L	25
78056	Cable Clip Fixer for RTR-45L	26
60117	Base of Cable Clip for RTR-45L	27
60116	Cover of Cable Clip for RTR-45L	28

Item No.	Description	Position
78121	Plug-Type Fixer for RTR-45L	29
60214	Power Line for RTR-45L	30
79291	Wire Clip for RTR-45L	31
30597	Switch for RTR-45L	32
60218	Indicator Light for RTR-45L	33
78061	Probe Pressing Plate for RTR-45L	34, 38
60181	Adjustable Feet for RTR-45L	35
71661	Control 150°C for RTR-45L	36
71662	Control 125°C for RTR-45L	37
78097	Baffle for RTR-45L	39
78098	Drawer for RTR-45L	40
78099	Baseboard for RTR-45L	41
69089	Panel Bracket for RTR-45L	42
69090	Right Panel for RTR-45L	44

Parts Breakdown

Model DW-CN-0080-L *41872*

Item No.	Description	Position
78027	Decorative Frame for RTR-80L	1
78028	Top Glass for RTR-80L	2
78030	Top Glass Base A for RTR-80L	3
78029	Top Glass Base B for RTR-80L	4
78031	Shelf for RTR-80L	5
69088	Side Glass for RTR-80L	6
78033	Door Glass for RTR-80L	7
78034	Nail for Glass for RTR-80L	8
78035	Handle for RTR-80L	9
69076	Hinge for RTR-80L	10
69091	A-Pillar for RTR-80L	11
69092	B-Pillar for RTR-80L	12
69093	LED for RTR-80L	13
69094	LED Separator for RTR-80L	14
78041	Shelf Frame for RTR-80L	15

Item No.	Description	Position
78042	Right Panel for RTR-80L	16
69097	Heating Element Hanger 1 for RTR-80L	17
60214	Power Line for RTR-80L	18
79291	Wire Clip for RTR-80L	19
70688	Switch for RTR-80L	20
60218	Indicator Light for RTR-80L	21
71640	Temperature Thermostat for RTR-80L	22
69095	Double-Face Protective Ring for RTR-80L	23
78050	Baffle for RTR-80L	24
60181	Adjustable Feet for RTR-80L	25
78052	Baseboard for RTR-80L	26
78053	Electric Box for RTR-80L	27
78054	Electric Cover for RTR-80L	28
78055	Drawer for RTR-80L	29
60145	#6 Driver for RTR-80L	30

Item No.	Description	Position
78056	Cable Clip Fixer for RTR-80L	31
60117	Base of Cable Clip for RTR-80L	32
60116	Cover of Cable Clip for RTR-80L	33
71661	Control 150°C for RTR-80L	34
71662	Control 125°C for RTR-80L	35
78061	Probe Pressing Plate for RTR-80L	36
78062	Plug-Type Fixer for RTR-80L	37
78063	Rear Panel for RTR-80L	38
69096	Heating Element for RTR-80L	39
78043	Heating Element Frame 2 for RTR-80L	40
60735	Water Receiver for RTR-80L	41
78066	Front Panel for RTR-80L	42
78067	Left Panel for RTR-80L	43
78068	Grill for RTR-80L	44

Model DW-CN-0115-L *41873*

Item No.	Description	Position
78027	Decorative Frame for RTR-115L	1
78028	Top Glass for RTR-115L	2
78030	Top Glass Base A for RTR-115L	3
78029	Top Glass Base B for RTR-115L	4
78031	Shelf for RTR-115L	5
78032	Side Glass for RTR-115L	6
78033	Door Glass for RTR-115L	7
78034	Nail for Glass for RTR-115L	8
78035	Handle for RTR-115L	9
69076	Hinge for RTR-115L	10
78037	Pillar A for RTR-115L	11
78038	Pillar B for RTR-115L	12
78039	LED Light for RTR-115L	13
78040	LED Partition for RTR-115L	14
78041	Shelf Frame for RTR-115L	15

Item No.	Description	Position
78042	Right Panel for RTR-115L	16
69097	Heating Element Hanger 1 for RTR-115L	17
69098	Power Line for RTR-115L	18
79291	Wire Clip for RTR-115L	19
70688	Switch for RTR-115L	20
60218	Indicator Light for RTR-115L	21
71640	Temperature Thermostat for RTR-115L	22
69095	Double-Face Protective Ring for RTR-115L	23
78050	Baffle for RTR-115L	24
60181	Adjustable Feet for RTR-115L	25
78052	Baseboard for RTR-115L	26
78053	Electric Box for RTR-115L	27
78054	Electric Cover for RTR-115L	28
78055	Drawer for RTR-115L	29
60145	#6 Driver for RTR-115L	30

Item No.	Description	Position
78056	Cable Clip Fixer for RTR-115L	31
60117	Base of Cable Clip for RTR-115L	32
60116	Cover of Cable Clip for RTR-115L	33
71661	Control 150°C for RTR-115L	34
71662	Control 125°C for RTR-115L	35
78061	Probe Pressing Plate for RTR-115L	36
78062	Plug-Type Fixer for RTR-115L	37
78063	Rear Panel for RTR-115L	38
69096	Heating Element for RTR-115L	39
78043	Heating Element Frame 2 for RTR-115L	40
60735	Water Receiver for RTR-115L	41
78066	Front Panel for RTR-115L	42
78067	Left Panel for RTR-115L	43
78068	Grill for RTR-115L	44

Electrical Schematics

Model DW-CN-0025-L *41868*
Model DW-CN-0045-L *41870*

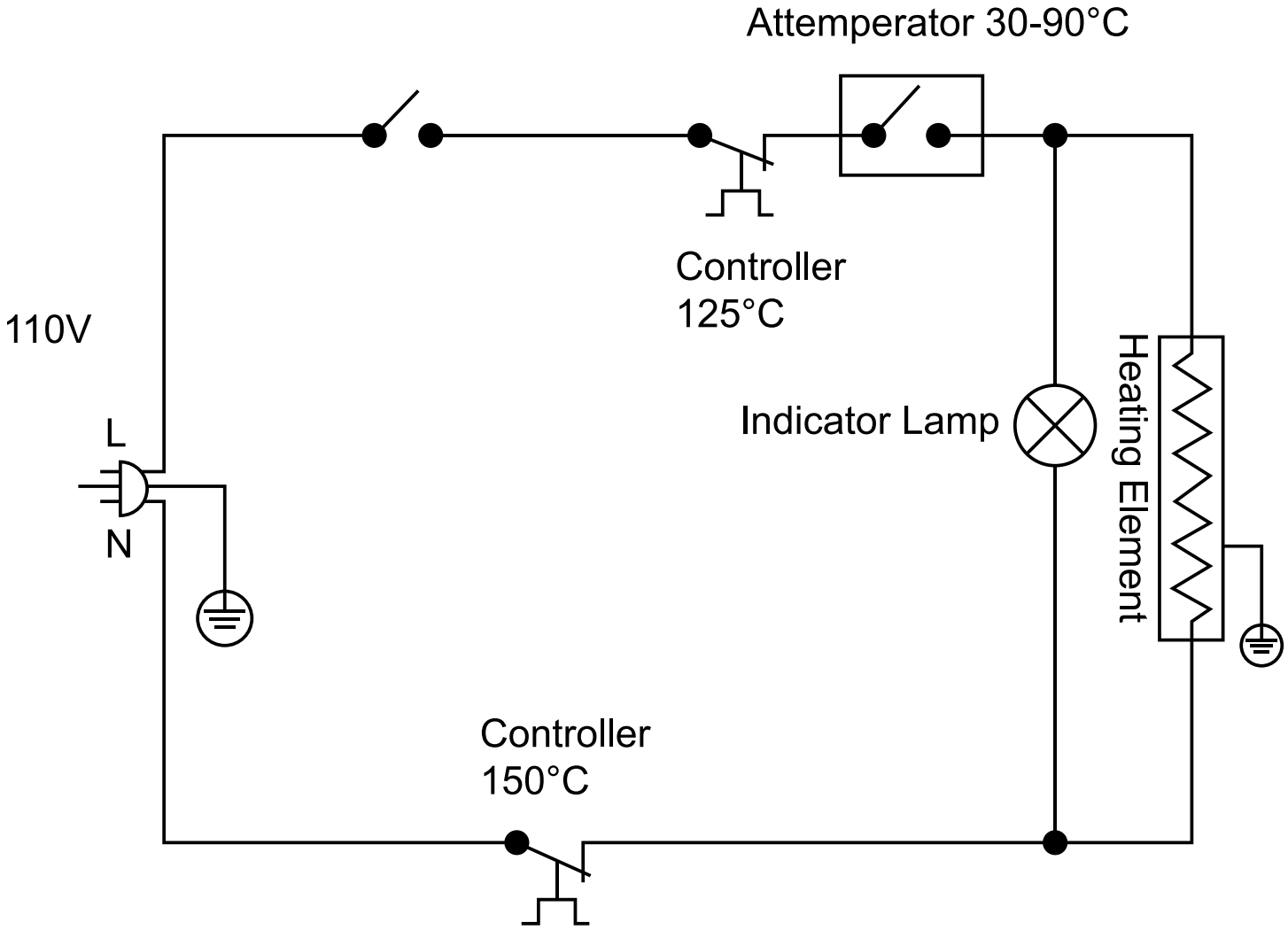

Electrical Schematics

Model DW-CN-0080-L *41872*
Model DW-CN-0115-L *41873*

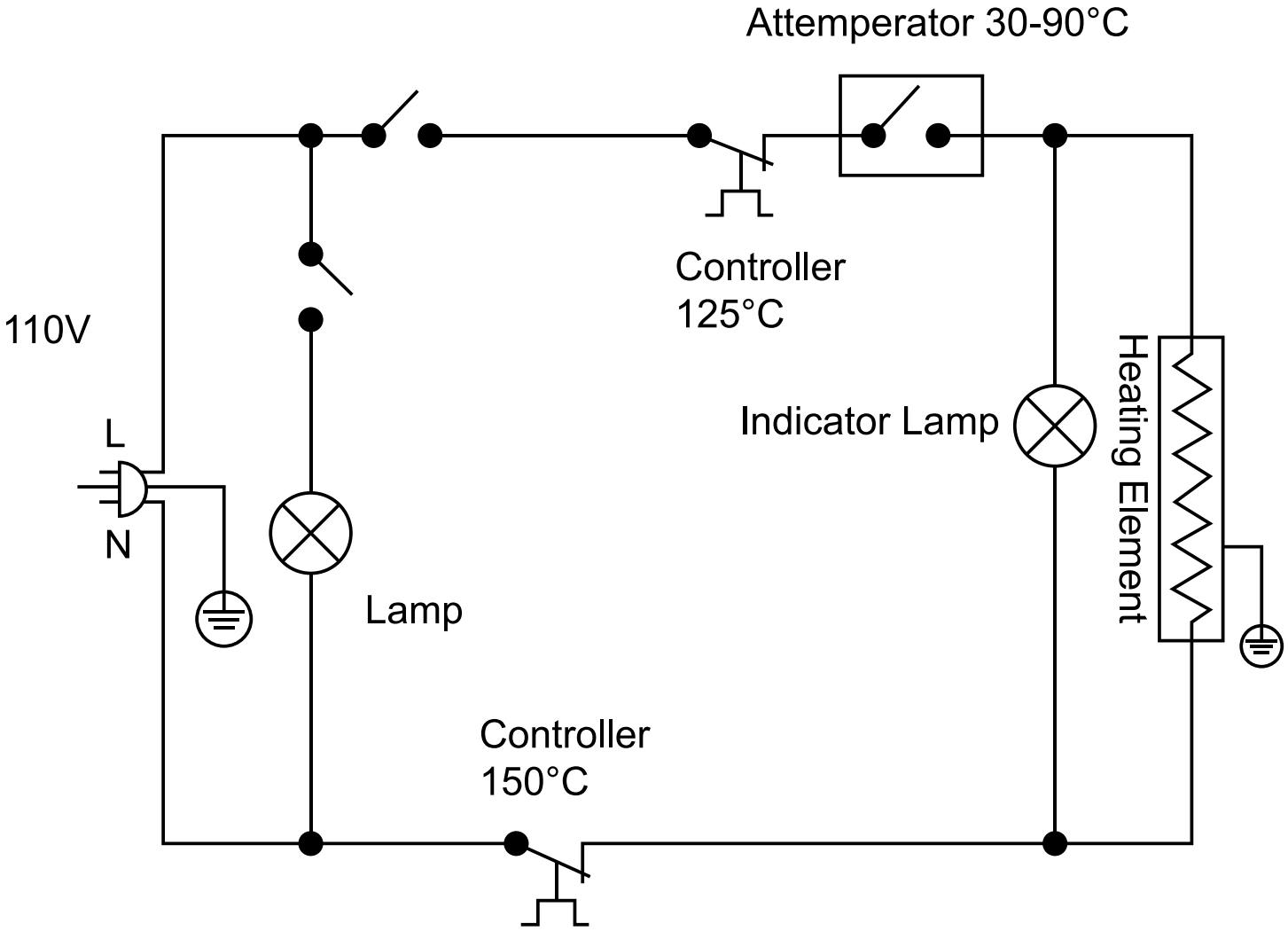

Notes

Notes

Notes

Warranty Registration

Thank you for purchasing an Omcan product. To register your warranty for this product, complete the information below, tear off the card at the perforation and then send to the address specified below. You can also register online by visiting:

Merci d'avoir acheté un produit Omcan. Pour enregistrer votre garantie pour ce produit, complétez les informations ci-dessous, détachez la carte au niveau de la perforation, puis l'envoyer à l'adresse spécifié ci-dessous. Vous pouvez également vous inscrire en ligne en visitant:

Gracias por comprar un producto Omcan usted. Para registrar su garantía para este producto, complete la información a continuación, cortar la tarjeta en la perforación y luego enviarlo a la dirección indicada a continuación. También puede registrarse en línea en:

https://omcan.com/warranty-registration/

For mailing in Canada

Pour postale au Canada

Por correo en Canadá

OMCAN
PRODUCT WARRANTY REGISTRATION
3115 Pepper Mill Court,
Mississauga, Ontario
Canada, L5L 4X5

For mailing in the US

Pour diffusion aux États-Unis

Por correo en los EE.UU.

OMCAN
PRODUCT WARRANTY REGISTRATION
4450 Witmer Industrial Estates, Unit 4,
Niagara Falls, New York
USA, 14305

or email to: service@omcan.com

Purchaser's Information

Name: _____

Address: _____

City: _____ Province or State: _____ Postal or Zip: _____

Country: _____

Dealer from which Purchased: _____

Dealer City: _____ Dealer Province or State: _____

Invoice: _____

Company Name: _____

Telephone: _____

Email Address: _____

Type of Company:

☐ Restaurant ☐ Bakery ☐ Deli

☐ Butcher ☐ Supermarket ☐ Caterer

☐ Institution *(specify)*: _____

☐ Other *(specify)*: _____

Model Name: _____ Model Number: _____ Serial Number: _____

Machine Description: _____

Date of Purchase (MM/DD/YYYY): _____ Date of Installation (MM/DD/YYYY): _____

Would you like to extend the warranty? ☐ Yes ☐ No

Thank you for choosing Omcan | Merci d'avoir choisi Omcan | Gracias por elegir Omcan

Since 1951 Omcan has grown to become a leading distributor of equipment and supplies to the North American food service industry. Our success over these many years can be attributed to our commitment to strengthen and develop new and existing relationships with our valued customers and manufacturers. Today with partners in North America, Europe, Asia and South America, we continually work to improve and grow the company. We strive to offer customers exceptional value through our qualified local sales and service representatives who provide convenient access to over 5,000 globally sourced products.

Depuis 1951 Omcan a grandi pour devenir un des “leaders” de la distribution des équipements et matériel pour l’industrie des services alimentaires en Amérique du Nord. Notre succès au cours de ces nombreuses années peut être attribué à notre engagement à renforcer et à développer de nouvelles et existantes relations avec nos clients et les fabricants de valeur. Aujourd’hui avec des partenaires en Amérique du Nord, Europe, Asie et Amérique du Sud, nous travaillons continuellement à améliorer et développer l’entreprise. Nous nous efforçons d’offrir à nos clients une valeur exceptionnelle grâce à nos ventes locales qualifiées et des représentants de service qui offrent un accès facile à plus de 5000 produits provenant du monde entier.

Desde 1951 Omcan ha crecido hasta convertirse en un líder en la distribución de equipos y suministros de alimentos en América del Norte industria de servicios. Nuestro éxito en estos años se puede atribuir a nuestro compromiso de fortalecer y desarrollar nuevas relaciones existentes con nuestros valiosos clientes y fabricantes. Hoy con socios de América del Norte, Europa, Asia y América del Sur, que trabajan continuamente para mejorar y crecer la empresa. Nos esforzamos por ofrecer a nuestros clientes valor excepcional a través de nuestro local de ventas y representantes de los servicios que proporcionan un fácil acceso a más de 5,000 productos con origen a nivel mundial.