Display Warmer

Model DW-CN-0097-SF
Item 47477

Instruction Manual

STOP

DO NOT RETURN THIS PRODUCT TO THE STORE

For questions or assistance with this product call OMCAN Toll Free:
1 800 465 0234
Customer Service
or
visit the Support section of
www.omcan.com

Revised - 07/05/2022

Intertek Intertek

Toll Free: 1-800-465-0234
Fax: 905-607-0234
Email: service@omcan.com
www.omcan.com

MADE IN CHINA

NEMA
5 - 15
125 VAC / 15 AMP
RECEPTACLE

Table of Contents

Model DW-CN-0097-SF

Section	Page
General Information	3 - 4
Safety and Warranty	4 - 6
Technical Specifications	6
Installation	6 - 7
Operation	7
Maintenance	7 - 8
Parts Breakdown	9 - 11
Electrical Schematics	12
Notes	13 - 14
Warranty Registration	15

General Information

Omcan Manufacturing and Distributing Company Inc., Food Machinery of America, Inc. dba Omcan and Omcan Inc. are not responsible for any harm or injury caused due to any person's improper or negligent use of this equipment. The product shall only be operated by someone over the age of 18, of sound mind, and not under the influence of any drugs or alcohol, who has been trained in the correct operation of this machine, and is wearing authorized, proper safety clothing. Any modification to the machine voids any warranty, and may cause harm to individuals using the machine or in the vicinity of the machine while in operation.

CHECK PACKAGE UPON ARRIVAL

Upon receipt of an Omcan shipment please inspect for external damage. If no damage is evident on the external packaging, open carton to ensure all ordered items are within the box, and there is no concealed damage to the machine. If the package has suffered rough handling, bumps or damage (visible or concealed), please note it on the bill of lading before accepting the delivery and contact Omcan within 24 hours, so we may initiate a claim with the carrier. A detailed report on the extent of the damage caused to the machine must be filled out within three days, from the delivery date shown in the shipping documents. Omcan has no recourse for damaged products that were shipped collect or third party.

Before operating any equipment, always read and familiarize yourself with all operation and safety instructions.

Omcan would like to thank you for purchasing this machine. It's of the utmost importance to save these instructions for future reference. Also save the original box and packaging for shipping the equipment if servicing or returning of the machine is required.

Omcan Fabrication et distribution Companie Limité et Food Machinery d'Amerique, dba Omcan et Omcan Inc. ne sont pas responsables de tout dommage ou blessure causé du fait que toute personne ait utilisé cet équipement de façon irrégulière. Le produit ne doit être exploité que par quelqu'un de plus de 18 ans, saine d'esprit, et pas sous l'influence d'une drogue ou d'acohol, qui a été formé pour utiliser cette machine correctement, et est vêtu de vêtements de sécurité approprié. Toute modification de la machine annule toute garantie, et peut causer un préjudice à des personnes utilisant la machine ou des personnes à proximité de la machine pendant son fonctionnement.

VÉRIFIEZ LE COLIS DÈS RÉCEPTION

Dès réception d'une expédition d'Omcan veuillez inspecter pour dommages externes. Si aucun dommage n'est visible sur l'emballage externe, ouvrez le carton afin de s'assurer que tous les éléments commandés sont dans la boîte, et il n'y a aucun dommage dissimulé à la machine. Si le colis n'a subi aucune mauvaises manipulations, de bosses ou de dommages (visible ou cachée), notez-le sur le bond de livraison avant d'accepter la livraison et contactez Omcan dans les 24 heures qui suivent, pour que nous puissions engager une réclamation auprès du transporteur. Un rapport détaillé sur l'étendue des dommages causés à la machine doit être rempli dans un délai de trois jours, à compter de la date de livraison indiquée dans les documents d'expédition. Omcan n'a aucun droit de recours pour les produits endommagés qui ont été expédiées ou cueilli par un tiers transporteur.

General Information

Avant d'utiliser n'importe quel équipement, toujours lire et vous familiariser avec toutes les opérations et les consignes de sécurité.

Omcan voudrais vous remercier d'avoir choisi cette machine. Il est primordial de conserver ces instructions pour une référence ultérieure. Également conservez la boîte originale et l'emballage pour l'expédition de l'équipement si l'entretien ou le retour de la machine est nécessaire.

Omcan Empresa De Fabricacion Y Distribucion Inc. Y Maquinaria De Alimentos De America, Inc. dba Omcan y Omcan Inc. no son responsables de ningun daño o perjuicío causado por cualquier persona inadecuada o el uso descuidado de este equipo. El producto solo podra ser operado por una persona mayor de 18 años, en su sano juicio y no bajo alguna influencia de droga o alcohol, y que este ha sido entrenado en el correcto funcionamiento de esta máquina, y ésta usando ropa apropiada y autorizada. Cualquier modificación a la máquina anúla la garantía y puede causar daños a las personas usando la máquina mientras esta en el funcionamiento.

REVISE EL PAQUETE A SU LLEGADA

Tras la recepcion de un envio Omcan favor inspeccionar daños externos. Si no hay daños evidentes en el empaque exterior, Habra el carton para asegurararse que todos los articulos solicitados ésten dentro de la caja y no encuentre daños ocultos en la máquina. Si el paquete ha sufrido un manejo de poco cuidado, golpes o daños (visible o oculto) por favor anote en la factura antes de aceptar la entrega y contacte Omcan dentro de las 24 horas, de modo que podamos iniciar una reclamación con la compañia. Un informe detallado sobre los daños causados a la máquina debe ser llenado en el plazo de tres días, desde la fecha de entrega que se muestra en los documentos de envío. Omcan no tiene ningun recurso por productos dañados que se enviaron a recoger por terceros.

Antes de utilizar cualquier equipo, siempre lea y familiarizarse con todas las instrucciones de funcionamiento y seguridad.

Omcan le gustaría darle las gracias por la compra de esta máquina. Es de la mayor importancia para salvar estas instrucciones para futuras consultas. Además, guarda la caja original y el embalaje para el envío del equipo si servicio técnico o devolución de la máquina que se requiere.

Safety and Warranty

- This appliance can be used by children aged from 8 years and above and persons with reduced physical, sensory or mental capabilities or lack of experience and knowledge if they have been given supervision or instruction concerning use of the appliance in a safe way and understand the hazards involved.
- Children shall not play with the appliance.
- Cleaning and user maintenance shall not be made by children without supervision.
- If the supply cord is damaged, it must be replaced by the manufacturer, its service agent or similarly

qualified persons in order to avoid a hazard.
- Don't use any kind of pressure water jet for cleaning the device.
- To prevent hazards and to ensure optimum efficiency, no modifications or alterations to the device that are not explicitly approved by the manufacturer may be undertaken. This device may only be operated in technically proper and safe condition.
- The device should be never left unattended during operation. Keep children away.
- Preserve this manual safely. When passing on/selling the device to a third party, the manual must be handed over along with the device.
- Every person using the device must act in accordance to the manual and under consideration of the safety advice.
- The device is to be used indoors only.
- Any technical interventions, as well as assembly and maintenance are to be made by a qualified customer service only.

PREPARATION AND POWER SUPPLY

EXCLUSIVE POWER SOCKET
The power receptacle must have a reliable ground connection.

NO SHARE ON SOCKET
Never let the device share the common socket with other appliance, otherwise the cable becomes hot and fire might be resulted.

PROTECT CABLES
Never break or damage the cables otherwise current leakage and fire might be resulted.

NO WATER FLUSHING
Never give the device surface a flush otherwise current leakage might be resulted.

PREVENT FROM FLAMMABLES AND EXPLOSIVE
Never put any flammable or explosive inside the device such as ether, gasoline, alcohol, adhesive and explosive. Never put dangerous product nearby the device.

RESIDENTIAL USERS: Vendor assumes no liability for parts or labor coverage for component failure or other damages resulting from installation in non-commercial or residential applications. The right is reserved to deny shipment for residential usage; if this occurs, you will be notified as soon as possible.

1 YEAR PARTS AND LABOUR BENCH WARRANTY

Within the warranty period, contact Omcan Inc. at 1-800-465-0234 to schedule a drop off to either an Omcan authorized service depot in the area, or to an Omcan Service warehouse to repair the equipment.

Unauthorized maintenance will void the warranty. Warranty covers electrical and part failures, not

Safety and Warranty

improper use.

Please see https://omcan.com/disclaimer for complete info.

WARNING:

The packaging components are classified as normal solid urban waste and can therefore be disposed of without difficulty.

In any case, for suitable recycling, we suggest disposing of the products separately (differentiated waste) according to the current norms.

DO NOT DISCARD ANY PACKAGING MATERIALS IN THE ENVIRONMENT!

Technical Specifications

Model	**DW-CN-0097-SF**
Electrical	110V / 60Hz / 1
Power	800W
Current	7.2A
Capacity	97 L / 3.42 cu.ft.
Shelf Capacity	22 lbs. / 10 kgs.
Rack Size	13.4” x 16.7” / 340 x 424mm
Temperature Range	30 - 90°C / 86 - 194°F
Weight	48.5 lbs. / 22 kgs.
Packaging Weight	52.9 lbs. / 24 kgs.
Dimensions	18.1” x 17.6” x 30.9” / 460 x 448 x 785mm
Packaging Dimensions	21” x 21.1” x 32.8” / 534 x 537 x 833mm
Item Number	47477

Installation

- Place the device on top of an even and safe surface which supports the weight of the device and is not heat sensitive.
- At no time should you place the device on an inflammable surface (such as table cloth, carpet, etc).
- You must not position the device near open fireplaces, electric ovens/arc furnaces/electric heaters or other

Installation

heat sources.
- Position the device in such a way that the plug is easily accessible.

Operation

- Before first use, clean the inner sides and the shelving grids with a soft cloth and a mild cleaning agent. Afterwards, dry the device thoroughly.
- Remove the water bowl from the device. The water bowl is installed inside the device and then fill the water bowl with water.
- Connect the device to a single grounded power socket.
- Set the temperature as required for respective foods. You may adjust the desired temperature in the range between 30 - 90°C / 86 - 194°F.
- The temperature inside of the hot display can be read from the front display.
- Put the foods in appropriate containers before placing them inside the hot display.
- Some of the device parts become very hot, always use safety gloves when placing or removing foods.
- The food is kept warm at the temperature set by you previously.
- In order to place or remove foods. You may open the door on the rear side.
- Switch on the inner light when required using the light switch of the device.
- Disconnect the device from the power socket when the device is not in use.

Maintenance

- Before beginning with repairs or cleaning, make sure the device has been disconnected from the power socket and has cooled down.
- Don’t use any acidic agents and make sure no water enters the device.
- To protected yourself from electric shock, never immerse the device, its cables and the plug in water or other liquids.
- Don’t use any kind of pressure water jet for cleaning the device.

CLEANING
- The device should be cleaned regularly.
- Clean the device from the inside and outside with a soft, damp cloth and a mild cleaning agent.
- Clean the placing grids and the housing with a soft, damp cloth and a mild cleaning agent.
- Clean the water bowl regularly. Calcification at the water bowl may be removed with common agents or liquids.
- Only use a soft cloth and make sure you never use any kind of abrasive agents or pads which could scratch the surface.
- After the cleaning procedure, you should use a soft and dry cloth to wipe dry and polish the surface.
- Make sure the device has been cleaned properly before storing it in a dry place.

Maintenance

MAINTENANCE

- Check the main lead from time to time to ensure it is not damaged in any way. Never use the device if the lead is damaged. If the lead is damaged, it must be replaced by a qualified electrician.
- Only a qualified technician should carry out repairs and maintenance of the device. Do not attempt to repair the device by yourself.
- Appliances must be disconnected from their power supply during cleaning or maintenance and when replacing parts.

CAUTIONS

Children should be supervised to ensure that they do not play with the appliance.

- If the supply cord is damaged, it must be replaced by the manufacturer, its service agent or similarly qualified persons in order to avoid a hazard.

Parts Breakdown

Model DW-CN-0097-SF 47477

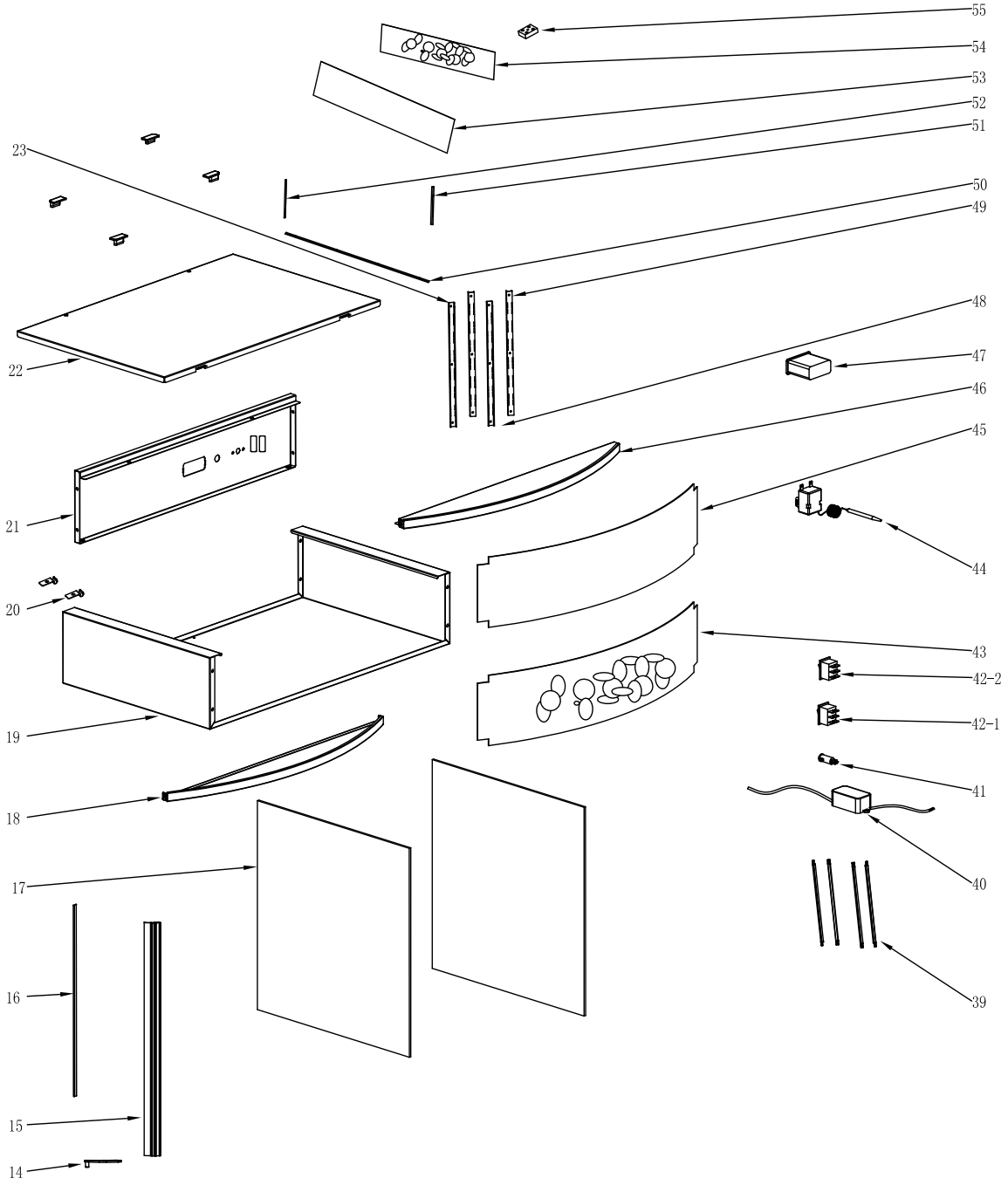

Parts Breakdown

Model DW-CN-0097-SF *47477*

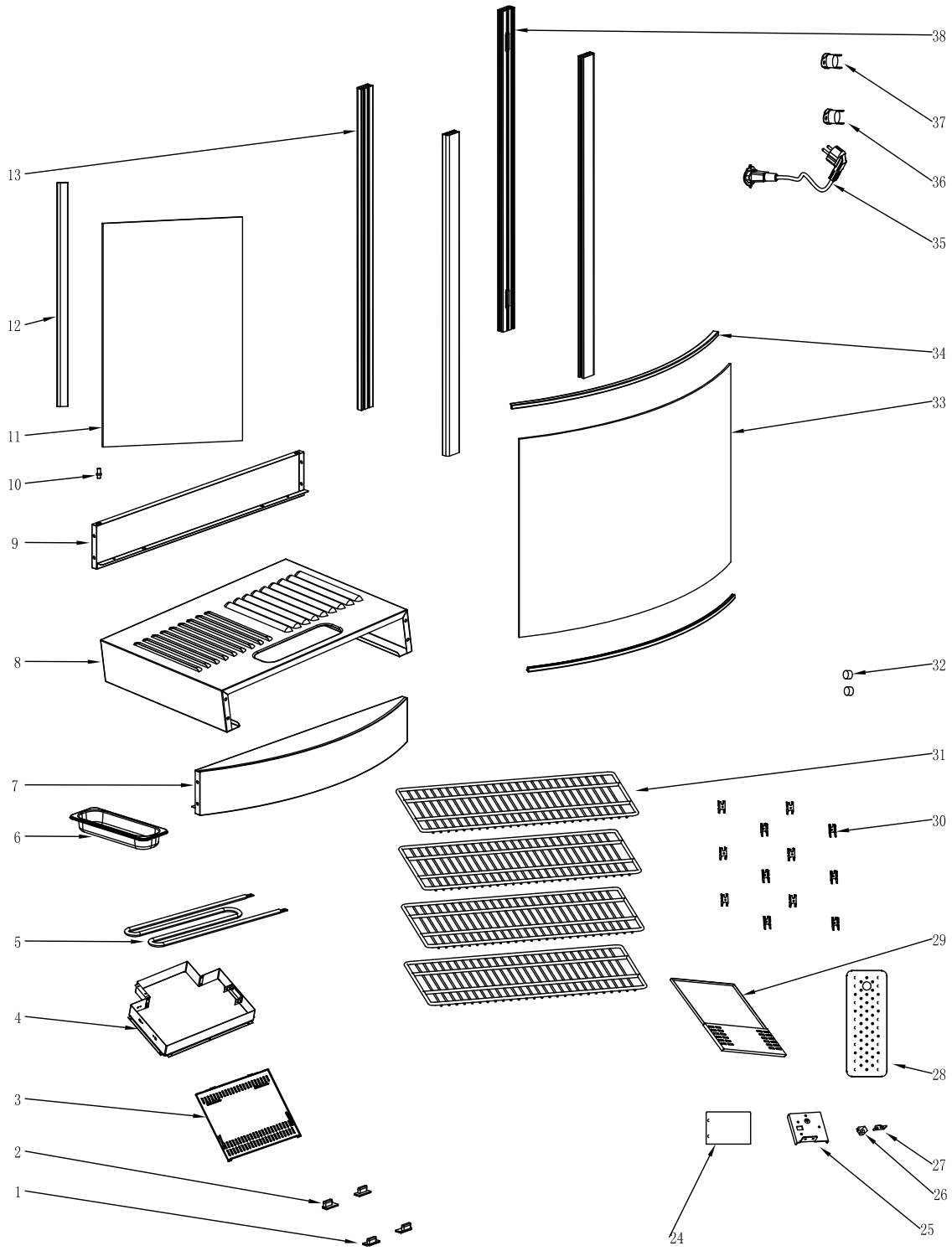

Parts Breakdown

Model DW-CN-0097-SF *47477*

Item No.	Description	Position
70819	Rubber Feet Left for 47477	1
70820	Rubber Feet Right for 47477	2
AK310	Bottom Board for 47477	3
AK311	Tray for Heater for 47477	4
AK312	Heating Element for 47477	5
60735	Water Receiver for 47477	6
AK313	Front Panel Component (01) for 47477	7
AK314	Ventilated Board for 47477	8
AK315	Back Panel for 47477	9
AK316	Door Bolt for 47477	10
70831	Door Glass for 47477	11
70832	Barrier Strip for 47477	12
70833	Front Pillar for 47477	13
67296	Upper Hinge Back for 47477	14
AK317	Handle for 47477	15
AK318	Stainless Iron Strip for 47477	16
70837	Side Glass for 47477	17
70838	Component of Front Panel for 47477	18
AK319	Top Side Board for 47477	19

Item No.	Description	Position
78061	Probe Pressing Plate for 47477	20
AK320	Top Back Board for 47477	21
70843	Cover Board for 47477	22
AK321	Grid Fixed Left Support for 47477	23
AK322	Heating Element Plate for 47477	24
AK323	Cable Clip Fixer for 47477	25
AD869	Steel Ingot for 47477	26
AD870	Fixed Plate for 47477	27
AK324	Lid for 47477	28
AK325	Drawer for 47477	29
AK326	Grid Hook for 47477	30
AK327	Shelf for 47477	31
70866	Magnet for 47477	32
70868	Curved Glass for 47477	33
70867	Decorative Strip for 47477	34
AK328	Power Cord for 47477	35
71662	Control 125°C for 47477	36
71661	Control 150°C for 47477	37
70861	Back Pillar for 47477	38

Item No.	Description	Position
AK329	LED for 47477	39
AK177	Power Drive for 47477	40
60218	Indicator Light for 47477	41
30597	Switch for 47477	42-1, 42-2
AK330	Front Decal for 47477	43
70849	Temperature Controller for 47477	44
70848	Transparent Plate for 47477	45
70847	Component of Front Panel for 47477	46
70846	Thermometer for 47477	47
AK331	Grid Fixed Left Support for 47477	48
AK332	Grid Fixed Right Support for 47477	49
AK333	Bottom Metal Insert for 47477	50
AK334	Right Metal Insert for 47477	51
AK335	Left Metal Insert for 47477	52
AK336	Side Acrylic for 47477	53
AK337	Side Decals (2pc) for 47477	54
AK338	Binding Post for 47477	55

Electrical Schematics

Model DW-CN-0097-SF *47477*

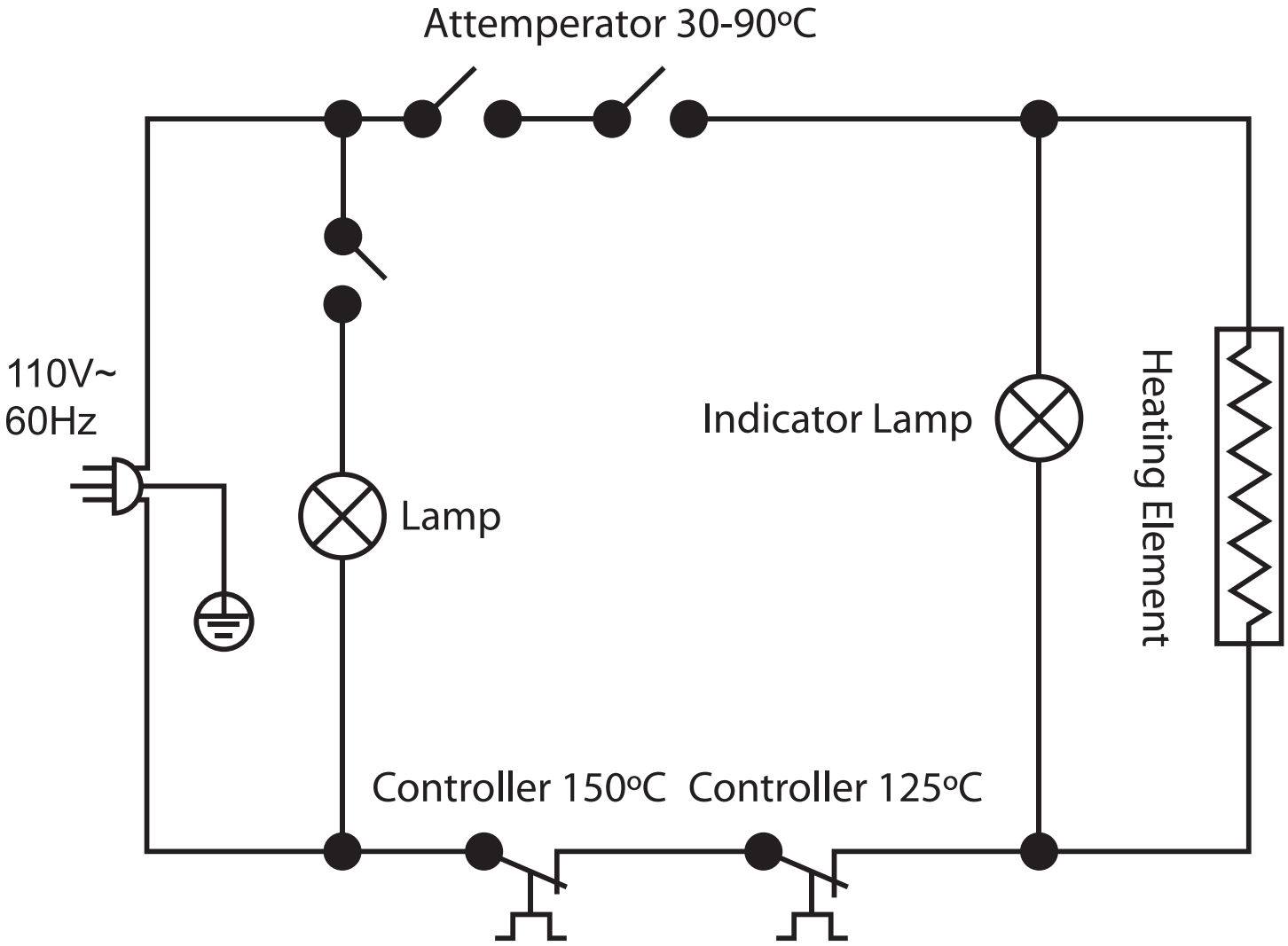

Notes

Notes

Warranty Registration

Thank you for purchasing an Omcan product. To register your warranty for this product, complete the information below, tear off the card at the perforation and then send to the address specified below. You can also register online by visiting:

Merci d'avoir acheté un produit Omcan. Pour enregistrer votre garantie pour ce produit, complétez les informations ci-dessous, détachez la carte au niveau de la perforation, puis l'envoyer à l'adresse spécifié ci-dessous. Vous pouvez également vous inscrire en ligne en visitant:

Gracias por comprar un producto Omcan usted. Para registrar su garantía para este producto, complete la información a continuación, cortar la tarjeta en la perforación y luego enviarlo a la dirección indicada a continuación. También puede registrarse en línea en:

https://omcan.com/warranty-registration/

For mailing in Canada

Pour postale au Canada

Por correo en Canadá

OMCAN
PRODUCT WARRANTY REGISTRATION
3115 Pepper Mill Court,
Mississauga, Ontario
Canada, L5L 4X5

For mailing in the US

Pour diffusion aux États-Unis

Por correo en los EE.UU.

OMCAN
PRODUCT WARRANTY REGISTRATION
4450 Witmer Industrial Estates, Unit 4,
Niagara Falls, New York
USA, 14305

or email to: service@omcan.com

Purchaser's Information

Name: _____

Address: _____

City: _____ Province or State: _____ Postal or Zip: _____

Country: _____

Dealer from which Purchased: _____

Dealer City: _____ Dealer Province or State: _____

Invoice: _____

Company Name: _____

Telephone: _____

Email Address: _____

Type of Company:

☐ Restaurant ☐ Bakery ☐ Deli

☐ Butcher ☐ Supermarket ☐ Caterer

☐ Institution *(specify)*: _____

☐ Other *(specify)*: _____

Model Name: _____ Model Number: _____ Serial Number: _____

Machine Description: _____

Date of Purchase (MM/DD/YYYY): _____ Date of Installation (MM/DD/YYYY): _____

Would you like to extend the warranty? ☐ Yes ☐ No

Thank you for choosing Omcan | Merci d'avoir choisi Omcan | Gracias por elegir Omcan

Since 1951 Omcan has grown to become a leading distributor of equipment and supplies to the North American food service industry. Our success over these many years can be attributed to our commitment to strengthen and develop new and existing relationships with our valued customers and manufacturers. Today with partners in North America, Europe, Asia and South America, we continually work to improve and grow the company. We strive to offer customers exceptional value through our qualified local sales and service representatives who provide convenient access to over 6,500 globally sourced products.

Depuis 1951 Omcan a grandi pour devenir un des “leaders” de la distribution des équipements et matériel pour l’industrie des services alimentaires en Amérique du Nord. Notre succès au cours de ces nombreuses années peut être attribué à notre engagement à renforcer et à développer de nouvelles et existantes relations avec nos clients et les fabricants de valeur. Aujourd’hui avec des partenaires en Amérique du Nord, Europe, Asie et Amérique du Sud, nous travaillons continuellement à améliorer et développer l’entreprise. Nous nous efforçons d’offrir à nos clients une valeur exceptionnelle grâce à nos ventes locales qualifiées et des représentants de service qui offrent un accès facile à plus de 6500 produits provenant du monde entier.

Desde 1951 Omcan ha crecido hasta convertirse en un líder en la distribución de equipos y suministros de alimentos en América del Norte industria de servicios. Nuestro éxito en estos años se puede atribuir a nuestro compromiso de fortalecer y desarrollar nuevas relaciones existentes con nuestros valiosos clientes y fabricantes. Hoy con socios de América del Norte, Europa, Asia y América del Sur, que trabajan continuamente para mejorar y crecer la empresa. Nos esforzamos por ofrecer a nuestros clientes valor excepcional a través de nuestro local de ventas y representantes de los servicios que proporcionan un fácil acceso a más de 6,500 productos con origen a nivel mundial.