Display Warmers

Models DW-CN-0120-5, 0160-5*, 0202-5*, 0252-5*
Items 47425, 47426*, 47427*, 47428*

Instruction Manual

STOP
DO NOT RETURN
THIS PRODUCT TO THE STORE

For questions or assistance with this product call OMCAN Toll Free:
1 800 465 0234
Customer Service
or
visit the Support section of
www.omcan.com

Revised - 07/05/2022

* C ETL LISTED US Intertek

* ETL SANITATION LISTED Intertek

Toll Free: 1-800-465-0234
Fax: 905-607-0234
Email: service@omcan.com
www.omcan.com

MADE IN CHINA

NEMA
5 - 15
125 VAC / 15 AMP
RECEPTACLE

Table of Contents

Model DW-CN-0120-5 / Model DW-CN-0160-5
Model DW-CN-0202-5 / Model DW-CN-0252-5

Section	Page
General Information	3 - 4
Safety and Warranty	4 - 6
Technical Specifications	6
Installation	7
Operation	7
Maintenance	7 - 8
Parts Breakdown	9 - 20
Electrical Schematics	21
Notes	22
Warranty Registration	23

General Information

Omcan Manufacturing and Distributing Company Inc., Food Machinery of America, Inc. dba Omcan and Omcan Inc. are not responsible for any harm or injury caused due to any person's improper or negligent use of this equipment. The product shall only be operated by someone over the age of 18, of sound mind, and not under the influence of any drugs or alcohol, who has been trained in the correct operation of this machine, and is wearing authorized, proper safety clothing. Any modification to the machine voids any warranty, and may cause harm to individuals using the machine or in the vicinity of the machine while in operation.

CHECK PACKAGE UPON ARRIVAL

Upon receipt of an Omcan shipment please inspect for external damage. If no damage is evident on the external packaging, open carton to ensure all ordered items are within the box, and there is no concealed damage to the machine. If the package has suffered rough handling, bumps or damage (visible or concealed), please note it on the bill of lading before accepting the delivery and contact Omcan within 24 hours, so we may initiate a claim with the carrier. A detailed report on the extent of the damage caused to the machine must be filled out within three days, from the delivery date shown in the shipping documents. Omcan has no recourse for damaged products that were shipped collect or third party.

Before operating any equipment, always read and familiarize yourself with all operation and safety instructions.

Omcan would like to thank you for purchasing this machine. It's of the utmost importance to save these instructions for future reference. Also save the original box and packaging for shipping the equipment if servicing or returning of the machine is required.

Omcan Fabrication et distribution Companie Limité et Food Machinery d'Amerique, dba Omcan et Omcan Inc. ne sont pas responsables de tout dommage ou blessure causé du fait que toute personne ait utilisé cet équipement de façon irrégulière. Le produit ne doit être exploité que par quelqu'un de plus de 18 ans, saine d'esprit, et pas sous l'influence d'une drogue ou d'acohol, qui a été formé pour utiliser cette machine correctement, et est vêtu de vêtements de sécurité approprié. Toute modification de la machine annule toute garantie, et peut causer un préjudice à des personnes utilisant la machine ou des personnes à proximité de la machine pendant son fonctionnement.

VÉRIFIEZ LE COLIS DÈS RÉCEPTION

Dès réception d'une expédition d'Omcan veuillez inspecter pour dommages externes. Si aucun dommage n'est visible sur l'emballage externe, ouvrez le carton afin de s'assurer que tous les éléments commandés sont dans la boîte, et il n'y a aucun dommage dissimulé à la machine. Si le colis n'a subi aucune mauvaises manipulations, de bosses ou de dommages (visible ou cachée), notez-le sur le bond de livraison avant d'accepter la livraison et contactez Omcan dans les 24 heures qui suivent, pour que nous puissions engager une réclamation auprès du transporteur. Un rapport détaillé sur l'étendue des dommages causés à la machine doit être rempli dans un délai de trois jours, à compter de la date de livraison indiquée dans les documents d'expédition. Omcan n'a aucun droit de recours pour les produits endommagés qui ont été expédiées ou cueilli par un tiers transporteur.

General Information

Avant d'utiliser n'importe quel équipement, toujours lire et vous familiariser avec toutes les opérations et les consignes de sécurité.

Omcan voudrais vous remercier d'avoir choisi cette machine. Il est primordial de conserver ces instructions pour une référence ultérieure. Également conservez la boîte originale et l'emballage pour l'expédition de l'équipement si l'entretien ou le retour de la machine est nécessaire.

Omcan Empresa De Fabricacion Y Distribucion Inc. Y Maquinaria De Alimentos De America, Inc. dba Omcan y Omcan Inc. no son responsables de ningun daño o perjuicío causado por cualquier persona inadecuada o el uso descuidado de este equipo. El producto solo podra ser operado por una persona mayor de 18 años, en su sano juicio y no bajo alguna influencia de droga o alcohol, y que este ha sido entrenado en el correcto funcionamiento de esta máquina, y ésta usando ropa apropiada y autorizada. Cualquier modificación a la máquina anúla la garantía y puede causar daños a las personas usando la máquina mientras esta en el funcionamiento.

REVISE EL PAQUETE A SU LLEGADA

Tras la recepcion de un envio Omcan favor inspeccionar daños externos. Si no hay daños evidentes en el empaque exterior, Habra el carton para asegurararse que todos los articulos solicitados ésten dentro de la caja y no encuentre daños ocultos en la máquina. Si el paquete ha sufrido un manejo de poco cuidado, golpes o daños (visible o oculto) por favor anote en la factura antes de aceptar la entrega y contacte Omcan dentro de las 24 horas, de modo que podamos iniciar una reclamación con la compañia. Un informe detallado sobre los daños causados a la máquina debe ser llenado en el plazo de tres días, desde la fecha de entrega que se muestra en los documentos de envío. Omcan no tiene ningun recurso por productos dañados que se enviaron a recoger por terceros.

Antes de utilizar cualquier equipo, siempre lea y familiarizarse con todas las instrucciones de funcionamiento y seguridad.

Omcan le gustaría darle las gracias por la compra de esta máquina. Es de la mayor importancia para salvar estas instrucciones para futuras consultas. Además, guarda la caja original y el embalaje para el envío del equipo si servicio técnico o devolución de la máquina que se requiere.

Safety and Warranty

CAUTION HOT SURFACE

Do not put food directly in contact with the shelf. The shelf of this equipment is intended for the storage and display of packaged products only.

SAFETY

- The appliance is not to be used by persons (including children) with reduced physical, sensory or mental

capabilities, or lack of experience and knowledge, unless they have been given supervision or instruction.
- Don’t use any kind of pressure water jet for cleaning the device.
- To prevent hazards and to ensure optimum efficiency, no modifications or alterations to the device that are not explicitly approved by the manufacture may be undertaken. This device may only be operated in technically proper and safe condition.
- The device should never be left unattended during operation.
- Preserve this manual. When passing on/selling the device to a third party, the manual must be handed over along with the device.
- The device is to be used indoors only.
- Any technical interventions, as well as assembly and maintenance are to be made by a qualified technician only.

GROUNDED POWER SOCKET
The power receptacle must have a reliable ground connection.

DO NOT SHARE ON SOCKET
Never let the device share the socket with other appliances, otherwise the cable becomes hot and fire might be resulted.

PROTECT CABLES
Never break or damage the cables otherwise electrocution and fire may be resulted.

DO NOT SPRAY
Never spray the device with water or any other liquid otherwise electrocution might be resulted.

KEEP AWAY FROM FLAMMABLES AND EXPLOSIVES
Never place any flammable or explosive inside the device such as ether, gasoline, alcohol, or adhesive. Never put these dangerous products near the device.

RESIDENTIAL USERS: Vendor assumes no liability for parts or labor coverage for component failure or other damages resulting from installation in non-commercial or residential applications. The right is reserved to deny shipment for residential usage; if this occurs, you will be notified as soon as possible.

1 YEARS PARTS AND LABOUR WARRANTY

Within the warranty period, contact Omcan Inc. at 1-800-465-0234 to schedule an Omcan authorized service technician to repair the equipment locally.

Unauthorized maintenance will void the warranty. Warranty covers electrical and part failures, not improper use.

Please see https://omcan.com/disclaimer for complete info.

Safety and Warranty

WARNING:

The packaging components are classified as normal solid urban waste and can therefore be disposed of without difficulty.

In any case, for suitable recycling, we suggest disposing of the products separately (differentiated waste) according to the current norms.

DO NOT DISCARD ANY PACKAGING MATERIALS IN THE ENVIRONMENT!

Technical Specifications

Model	**DW-CN-0120-5**	**DW-CN-0160-5**	**DW-CN-0202-5**	**DW-CN-0252-5**
Electrical	110V / 60Hz / 1			
Power	1650W			
Rated Current	15A			
Capacity	120 L / 4.2 cu.ft	160 L / 5.7 cu.ft	202 L / 7.1 cu.ft	252 L / 8.9 cu.ft
Shelf Capacity	33.1 lbs. / 15 kgs.		44.1 lbs. / 20 kgs.	55.1 lbs. / 25 kgs.
Rack Size	15.7” x 25” 398 x 636mm	15.7” x 32” 398 x 813mm	15.7” x 45.9” 398 x 1167mm	
	14.4” x 25” 367 x 636mm	14.4” x 32” 367 x 813mm	14.4” x 45.9” 367 x 1167mm	
	13.2” x 25” 335 x 636mm	13.2” x 32” 335 x 813mm	13.2” x 45.9” 335 x 1167mm	
Temperature Range	30 - 90°C / 86 - 194°F			
Weight	84.9 lbs. / 38.5 kgs.	103.6 lbs. / 47 kgs.	132.3 lbs. / 60 kgs.	163.1 lbs. / 74 kgs.
Packaging Weight	91.5 lbs. / 41.5 kgs.	110.2 lbs. / 50 kgs.	138.9 lbs. / 63 kgs.	172 lbs. / 78 kgs.
Dimensions	26.7” x 22.4” x 27” 678 x 568 x 686mm	33.7” x 22.4” x 27” 856 x 568 x 686mm	48” x 23.1” x 27” 1219 x 588 x 685mm	60” x 22.4” x 27” 1524 x 568 x 685mm
Packaging Weight	29.5” x 24.7” x 28.8” 749 x 627 x 731mm	36.5” x 24.7” x 28.8” 928 x 627 x 731mm	50.8” x 24.7” x 28.9” 1290 x 627 x 735mm	62.8” x 36.5” x 28.9” 1595 x 927 x 735mm
Item Number	47425	47426	47427	47428

Installation

- Place the device on top of an even and stable surface which supports the weight of the device and is not heat sensitive. At no time should you place the device on a flammable surface (such as table cloth, carpet, ect).
- You must not position the device near any heat sources (such as open fireplaces, electric ovens, ect).
- Position the device in such a way that the plug can be easily accessed.

Operation

- Before first use, clean the inner sides and the grids with a soft cloth and a mild cleaning agent. Afterwards, dry the device thoroughly.
- Remove the water bowl from the device to fill with water.

SET TEMPERATURE

1. Press the SET button, the set temperature is displayed. Press the UP or DOWN buttons to modify and store the displayed value. Press the SET button to exit the adjustment and display the internal temperature. If no button is pressed within 10 seconds, the display shows the internal temperature.
2. Illumination: Press the LIGHT button, the light turns on, press it again and the light turns off.
3. Heating Indicator: During heating, the LED is on, when the temperature inside is constant, the LED is off.

- Set the temperature as required for respective foods. You may adjust the desired temperature in the range between 30 - 90°C (86 - 194°F).
- The temperature inside can be read from the front display.
- Put the foods in appropriate containers before placing them inside the hot display and shut it by using the sliding door.
- Some of the device parts become very hot, always use safety gloves when placing or removing food.
- Switch on the inner light when required by using the light switch on the device.
- Disconnect the device from the power socket when the device is not in use.

Maintenance

- Before beginning with repair or cleaning, make sure the device has been disconnected from the power socket and has cooled down completely.
- Don’t use any acidic agents and make sure no water enters the device.
- To protect yourself from electric shock, never immerse the device, its cables or the plug in water or other liquids. Don’t use any kind of pressure water jet for cleaning the device.

Maintenance

CLEANING

- The device should be cleaned regularly.
- Clean the device from the inside and outside with a soft, damp cloth and a mild cleaning agent.
- Clean the grids and the housing with a soft, damp cloth and a mild cleaning agent.
- Clean the water bowl regularly. Calcifications at the water bowl may be removed with common agents or liquids.
- Only use a soft cloth and make sure you never use any kind of abrasive agents or pads which could scratch the surface.
- After the cleaning procedure, you should use a soft and dry cloth to wipe dry.
- Make sure the device has been cleaned properly before storing in a dry place.

MAINTENANCE

- Check the power cord from time to time to ensure it is not damaged in any way. Never use the device if the cord is damaged. If the cord is damaged, it must be replaced by a qualified technician.
- Only a qualified technician should carry out repairs and maintenance of the device. Do not attempt to repair the device yourself.
- Always disconnect the device for the power supply before any cleaning or maintenance.

Parts Breakdown

Model DW-CN-0120-5 *47425*

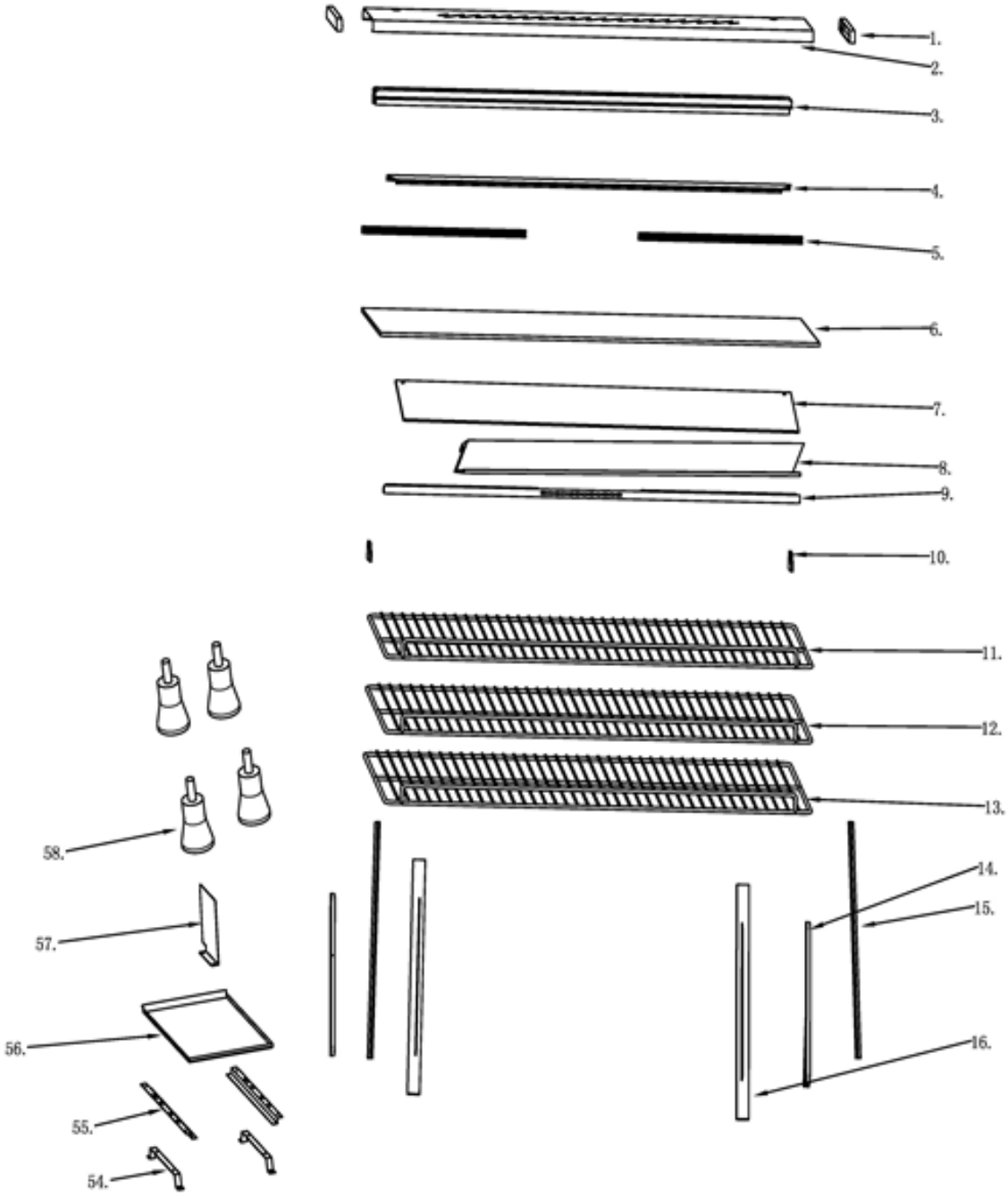

Parts Breakdown

Model DW-CN-0120-5 *47425*

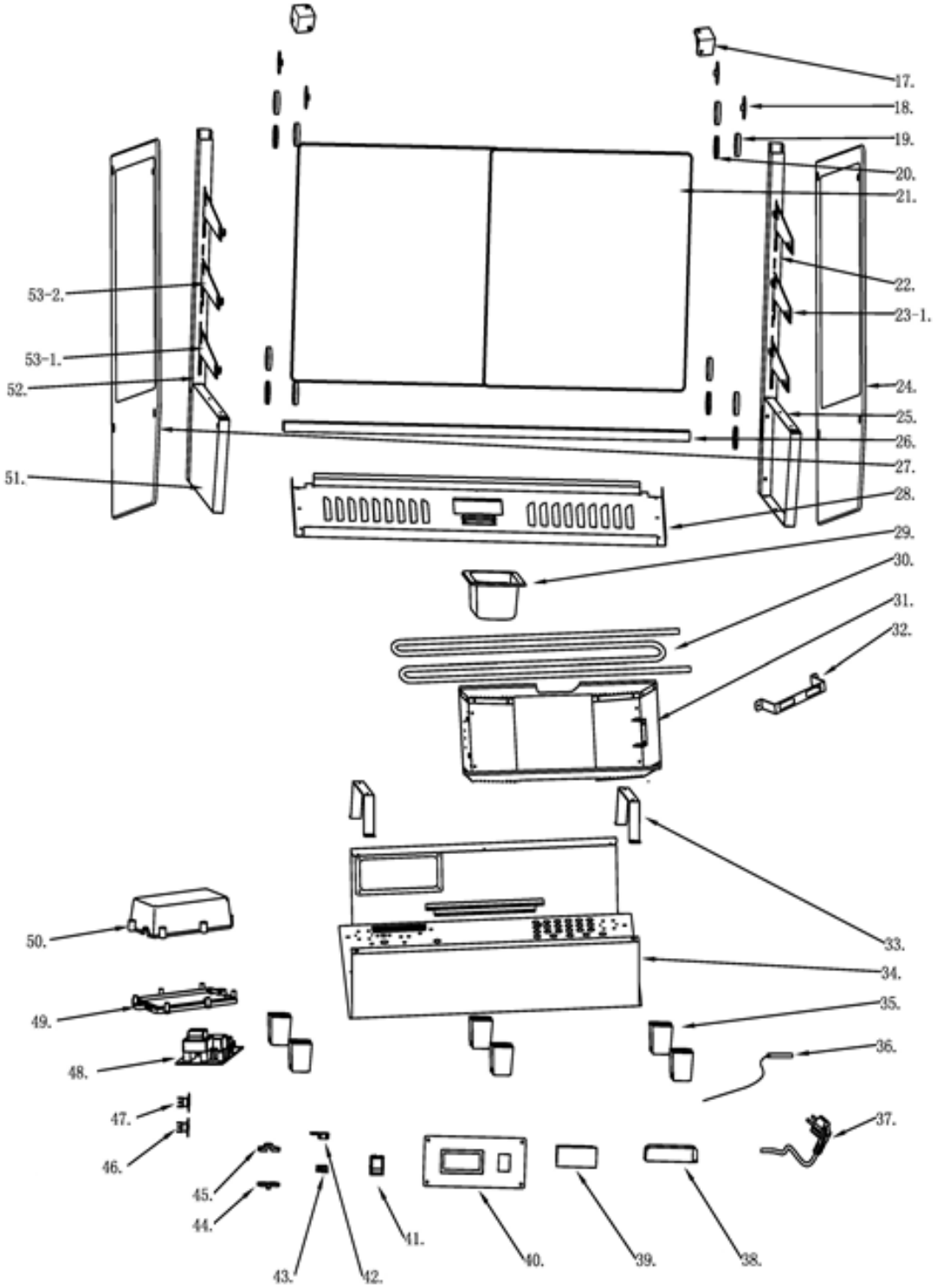

Parts Breakdown

Model DW-CN-0120-5 *47425*

Item No.	Description	Position
AD867	Side Board for Light Cover for 47425	1
AJ486	Lampshade for 47425	2
AD848	Sliding Glass Track for 47425	3
AJ487	LED for 47425	4
AD849	Sealing Strip for 47425	5
AK144	Top Glass for 47425	6
AK145	Front Glass for 47425	7
AD852	Sealing Strip for 47425	8
AJ488	Probe Fixing Plate for 47425	9
AJ489	Column Gasket for 47425	10
30757	Shelf 2 for 47425	11
30756	Shelf 1 for 47425	12
AD854	Shelf 3 for 47425	13
70675	Sheath of Door Knob for 47425	14
AJ490	Sliding Door Insert for 47425	15
AJ491	Pull out the Door for 47425	16
66238	Fixed Angle for 47425	17
AJ691	Glass Silicone Gasket for 47425	18
79312	Nut Decoration for 47425	19
79313	Nut Gasket for 47425	20

Item No.	Description	Position
AJ492	Rear Door Glass for 47425	21
71656	Right Pillar for 47425	22
67314	Bottom Shelf Bracket Right for 47425	23-1
71653	Right Small Bracket for 47425	23-2
AK146	Right Side Glass for 47425	24
71649	Right Panel for 47425	25
AJ496	Back Door Chute for 47425	26
AK147	Left Glass for 47425	27
AK148	Thermal Base Plate for 47425	28
71658	1/9 GN Pan for 47425	29
AJ498	U-Shaped Heating Pipe for 47425	30
AK149	Heater Pipe Chassis for 47425	31
AJ514	Heating Pipe Bracket for 47425	32
AJ500	Heater Stand for 47425	33
AK150	Mainframe for 47425	34
AJ502	Square Foot Pad for 47425	35
AJ503	Temperature Probe for 47425	36
AJ424	Power Plug for 47425	37
AJ504	Power Drive for 47425	38
AJ505	New Display for 47425	39

Item No.	Description	Position
AJ506	Switch Panel for 47425	40
71514	Switch for 47425	41
AD870	Fixed Plate for 47425	42
AD869	Steel Ingot for 47425	43
61246	Wire Clip Holder for 47425	44
61245	Wire Clip Cover for 47425	45
71662	Control 125°C for 47425	46
71661	Control 150°C for 47425	47
AJ507	Small Motherboard for 47425	48
AA051	Control Box Cover for 47425	49
AA050	Control Box for 47425	50
71651	Left Panel for 47425	51
71648	Left Pillar for 47425	52
71652	Left Small Bracket for 47425	53-1
67313	Bottom Shelf Bracket Left for 47425	53-2
AJ510	Heater Bracket Chassis for 47425	54
AJ511	Drawer Baffle Bracket for 47425	55
AJ512	Drawer for 47425	56
AJ513	Water Box Baffle for 47425	57
AJ515	Rubber Adjustable Feet for 47425	58

Parts Breakdown

Model DW-CN-0160-5 *47426*

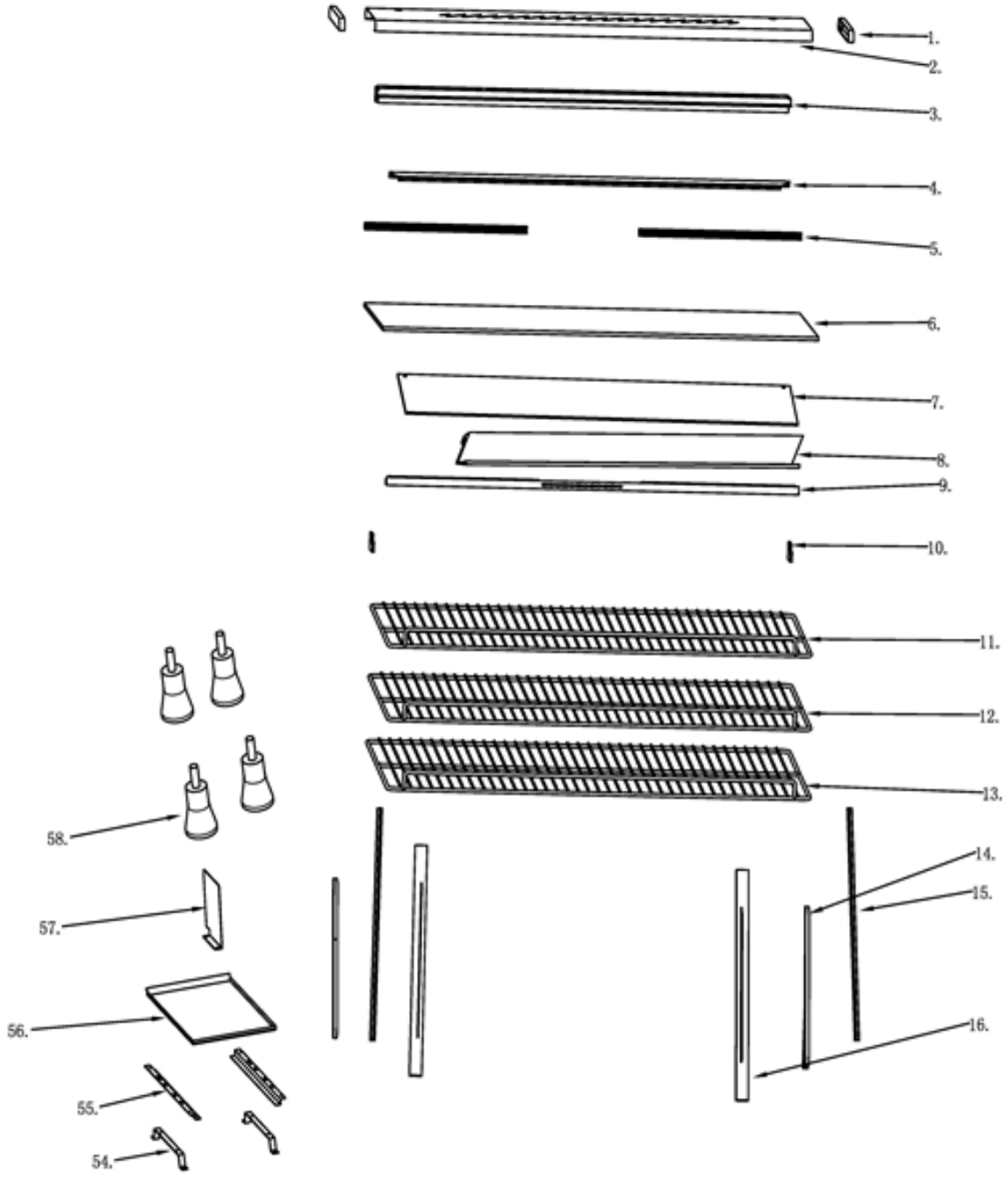

Parts Breakdown

Model DW-CN-0160-5 *47426*

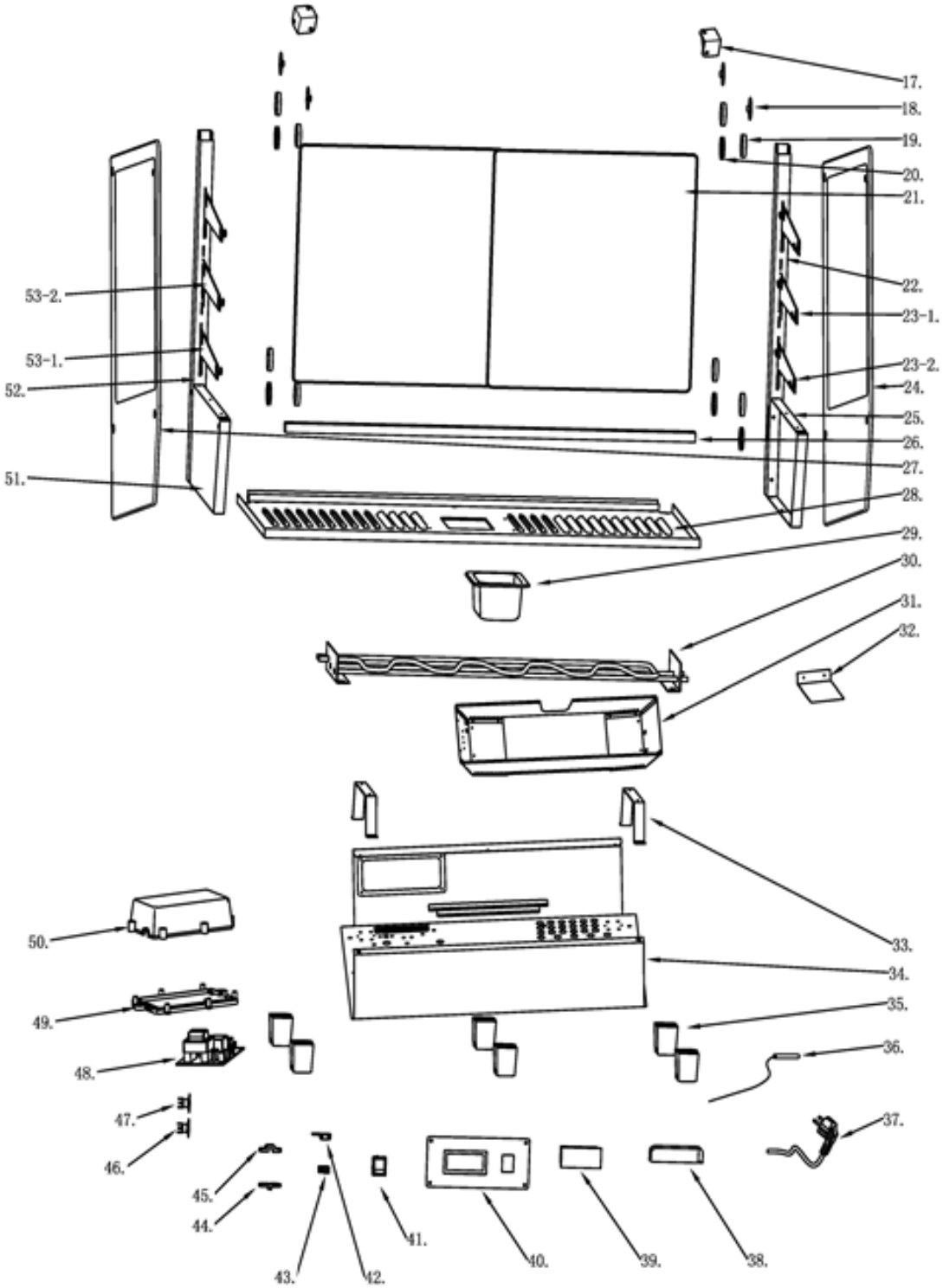

Parts Breakdown

Model DW-CN-0160-5 *47426*

Item No.	Description	Position
AD867	Side Board for Light Cover for 47426	1
AJ516	Lampshade for 47426	2
71682	Sliding Glass Track for 47426	3
AJ517	LED for 47426	4
AD871	Sealing Strip for 47426	5
AK151	Top Glass for 47426	6
AK152	Front Glass for 47426	7
AD872	Sealing Strip for 47426	8
AJ518	Probe Fixing Plate for 47426	9
AJ489	Column Gasket for 47426	10
71683	Chrome Shelf 1 for 47426	11
71684	Chrome Shelf 2 for 47426	12
71685	Chrome Shelf 3 for 47426	13
70675	Sheath of Door Knob for 47426	14
AJ490	Sliding Door Insert for 47426	15
AJ491	Pull out the Door for 47426	16
66238	Fixed Angle for 47426	17
AJ691	Glass Silicone Gasket for 47426	18
79312	Nut Decoration for 47426	19
79313	Nut Gasket for 47426	20

Item No.	Description	Position
AJ519	Rear Door Glass for 47426	21
71656	Right Pillar for 47426	22
67314	Bottom Shelf Bracket Right for 47426	23-1
71653	Right Small Bracket for 47426	23-2
AK146	Right Side Glass for 47426	24
71649	Right Panel for 47426	25
AK153	Back Door Chute for 47426	26
AK147	Left Glass for 47426	27
AK154	Thermal Base Plate for 47426	28
71658	1/9 GN Pan for 47426	29
AJ522	V-Shaped Heating Pipe for 47426	30
AK149	Heater Pipe Chassis for 47426	31
AJ527	Heating Pipe Baffle for 47426	32
AJ500	Heater Stand for 47426	33
AK155	Mainframe for 47426	34
AJ502	Square Foot Pad for 47426	35
AJ503	Temperature Probe for 47426	36
AJ424	Power Plug for 47426	37
AJ525	Power Drive for 47426	38
AJ505	New Display for 47426	39

Item No.	Description	Position
AJ506	Switch Panel for 47426	40
71514	Switch for 47426	41
AD870	Fixed Plate for 47426	42
AD869	Steel Ingot for 47426	43
61246	Wire Clip Holder for 47426	44
61245	Wire Clip Cover for 47426	45
71662	Control 125°C for 47426	46
71661	Control 150°C for 47426	47
AJ507	Small Motherboard for 47426	48
AA051	Control Box Cover for 47426	49
AA050	Control Box for 47426	50
71651	Left Panel for 47426	51
71648	Left Pillar for 47426	52
71652	Left Small Bracket for 47426	53-1
67313	Bottom Shelf Bracket Left for 47426	53-2
AJ510	Heater Bracket Chassis for 47426	54
AJ511	Drawer Baffle Bracket for 47426	55
AJ526	Drawer for 47426	56
AJ513	Water Box Baffle for 47426	57
AJ515	Rubber Adjustable Feet for 47426	58

Parts Breakdown

Model DW-CN-0202-5 *47427*

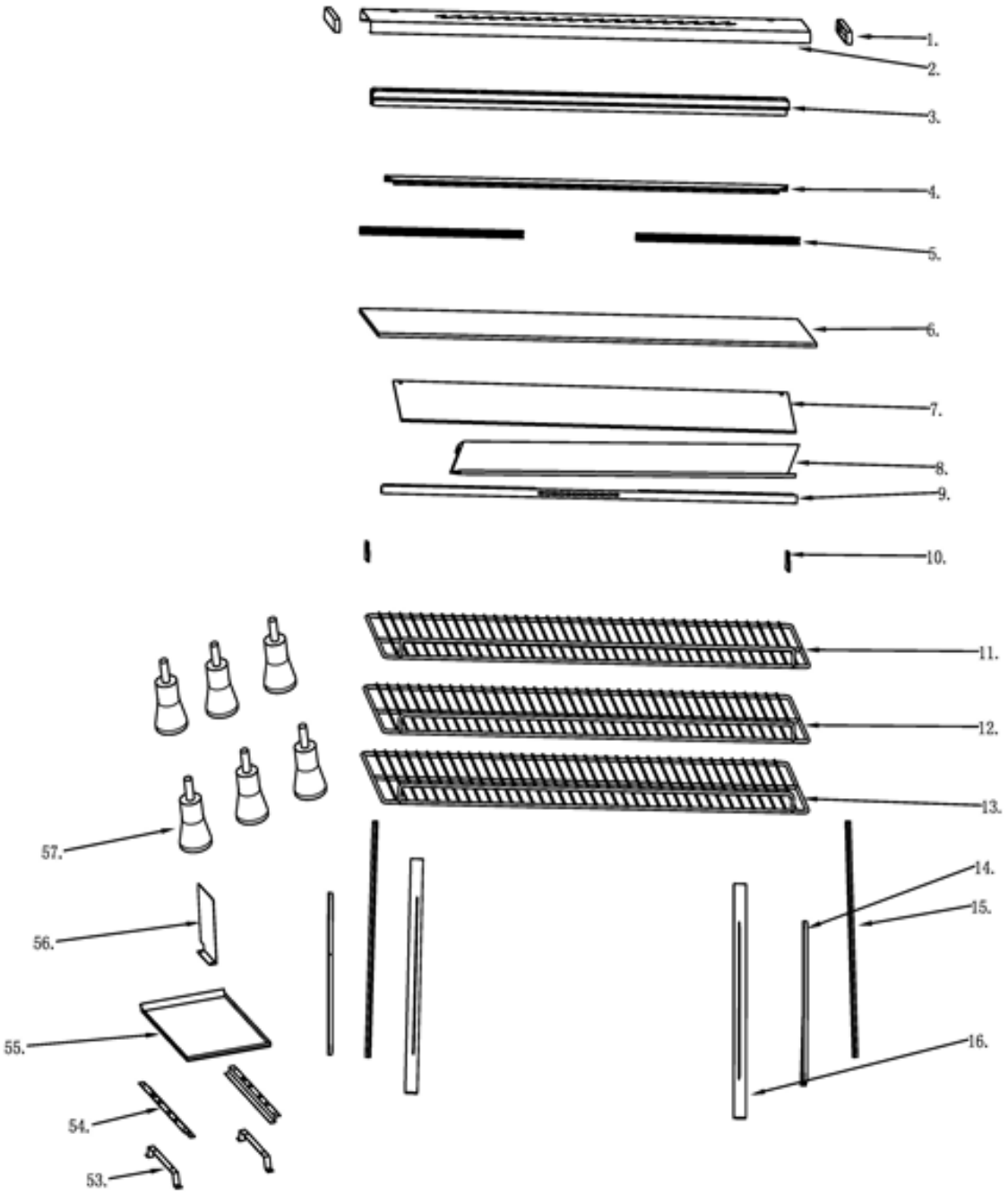

Parts Breakdown

Model DW-CN-0202-5 *47427*

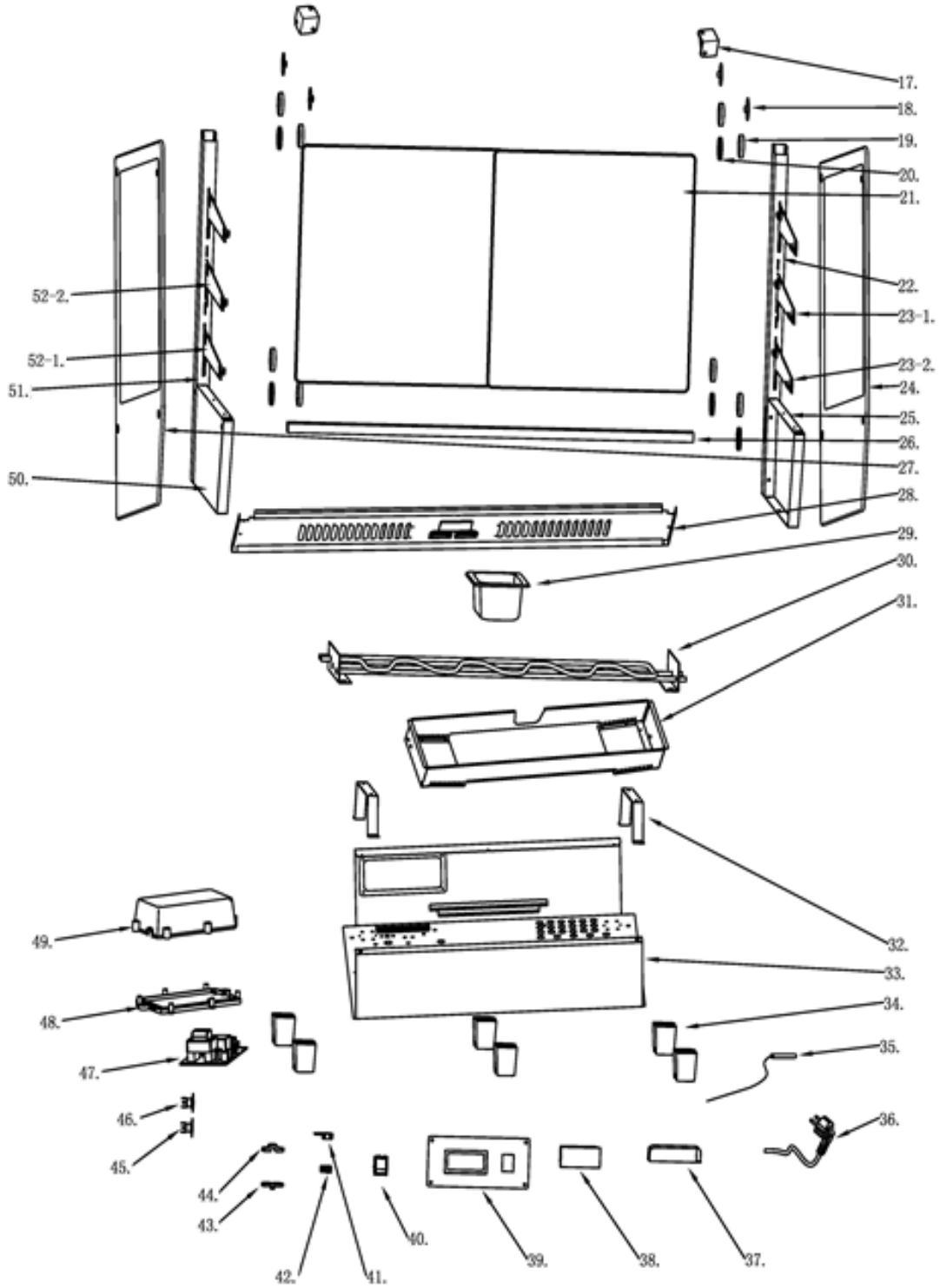

Parts Breakdown

Model DW-CN-0202-5 *47427*

Item No.	Description	Position
AD867	Side Board for Light Cover for 47427	1
AJ681	Lampshade for 47427	2
AJ682	Glass Chute for 47427	3
AJ683	LED for 47427	4
AJ684	Glass Inlay for 47427	5
AK156	Top Glass for 47427	6
AK157	Front Glass for 47427	7
AK158	Glass Seal Strip for 47427	8
AJ687	Probe Fixing Plate for 47427	9
AJ489	Column Gasket for 47427	10
AJ688	Internet Rack for 47427	11
AJ689	Middle Grid Rack for 47427	12
AJ690	Remove the Rack for 47427	13
70675	Sheath of Door Knob for 47427	14
AJ490	Sliding Door Insert for 47427	15
AJ491	Pull out the Door for 47427	16
66238	Fixed Angle for 47427	17
AJ691	Glass Silicone Gasket for 47427	18
79312	Nut Decoration for 47427	19
79313	Nut Gasket for 47427	20

Item No.	Description	Position
AJ692	Rear Door Glass for 47427	21
71656	Right Pillar for 47427	22
67314	Bottom Shelf Bracket Right for 47427	23-1
71653	Right Small Bracket for 47427	23-2
AK146	Right Side Glass for 47427	24
71649	Right Panel for 47427	25
AK159	Back Door Chute for 47427	26
AK147	Left Glass for 47427	27
AK160	Thermal Base Plate for 47427	28
71658	1/9 GN Pan for 47427	29
AJ697	V-Shaped Heating Pipe for 47427	30
AK149	Heater Pipe Chassis for 47427	31
AJ500	Heater Stand for 47427	32
AJ699	Mainframe for 47427	33
AJ502	Square Foot Pad for 47427	34
AJ503	Temperature Probe for 47427	35
AJ424	Power Plug for 47427	36
AJ700	Power Drive for 47427	37
AJ505	New Display for 47427	38
AJ506	Switch Panel for 47427	39

Item No.	Description	Position
71514	Switch for 47427	40
AD870	Fixed Plate for 47427	41
AD869	Steel Ingot for 47427	42
61246	Wire Clip Holder for 47427	43
61245	Wire Clip Cover for 47427	44
AJ701	120-Degree Thermostat for 47427	45
AJ702	135-Degree Thermostat for 47427	46
AJ507	Small Motherboard for 47427	47
AA051	Control Box Cover for 47427	48
AA050	Control Box for 47427	49
71651	Left Panel for 47427	50
71648	Left Pillar for 47427	51
AJ510	Heater Bracket Chassis for 47427	53
71652	Left Small Bracket for 47427	52-1
67313	Bottom Shelf Bracket Left for 47427	52-2
AJ511	Drawer Baffle Bracket for 47427	54
AJ705	Drawer for 47427	55
AJ513	Water Box Baffle for 47427	56
AJ515	Rubber Adjustable Feet for 47427	57

Parts Breakdown

Model DW-CN-0252-5 *47428*

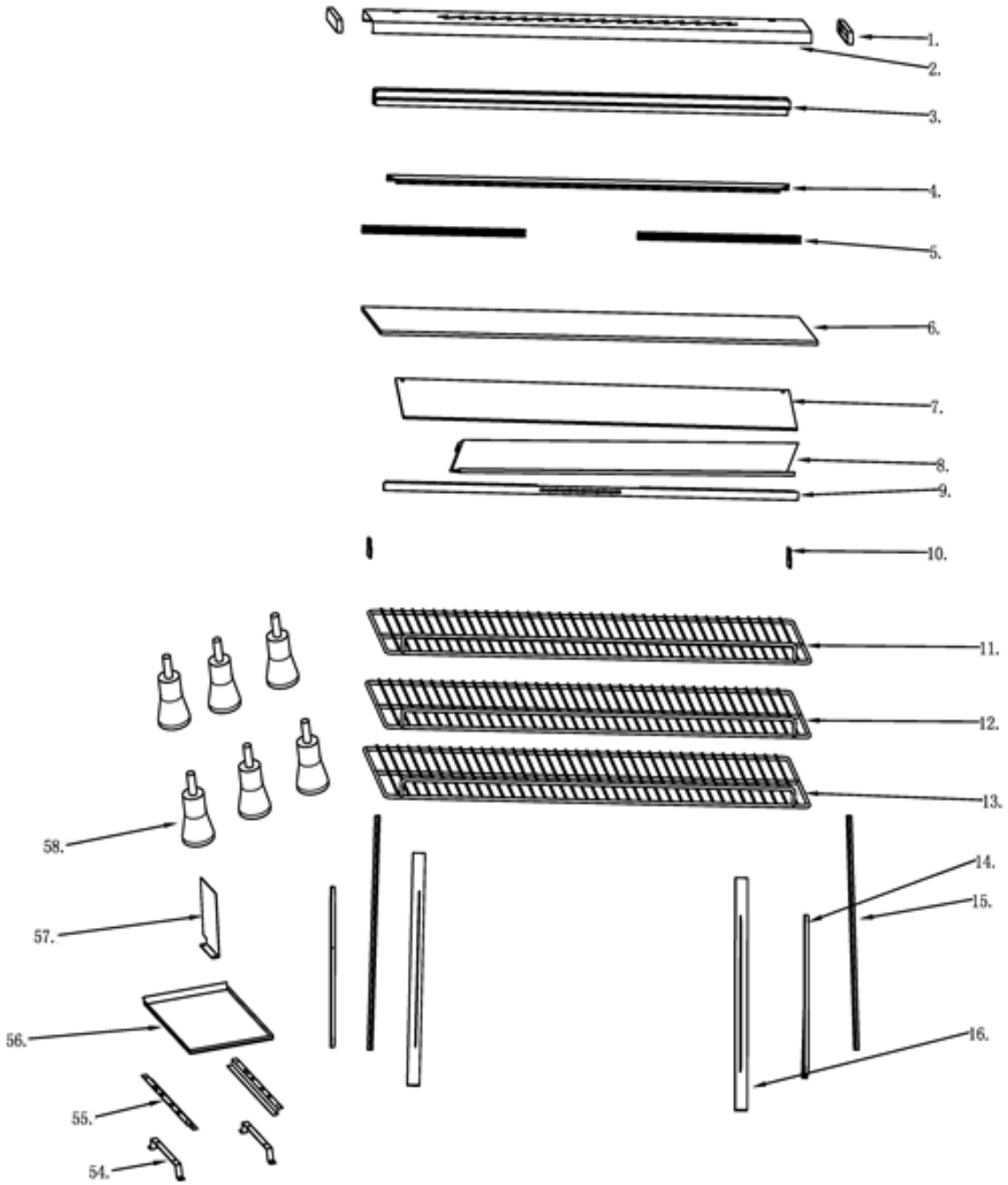

Parts Breakdown

Model DW-CN-0252-5 *47428*

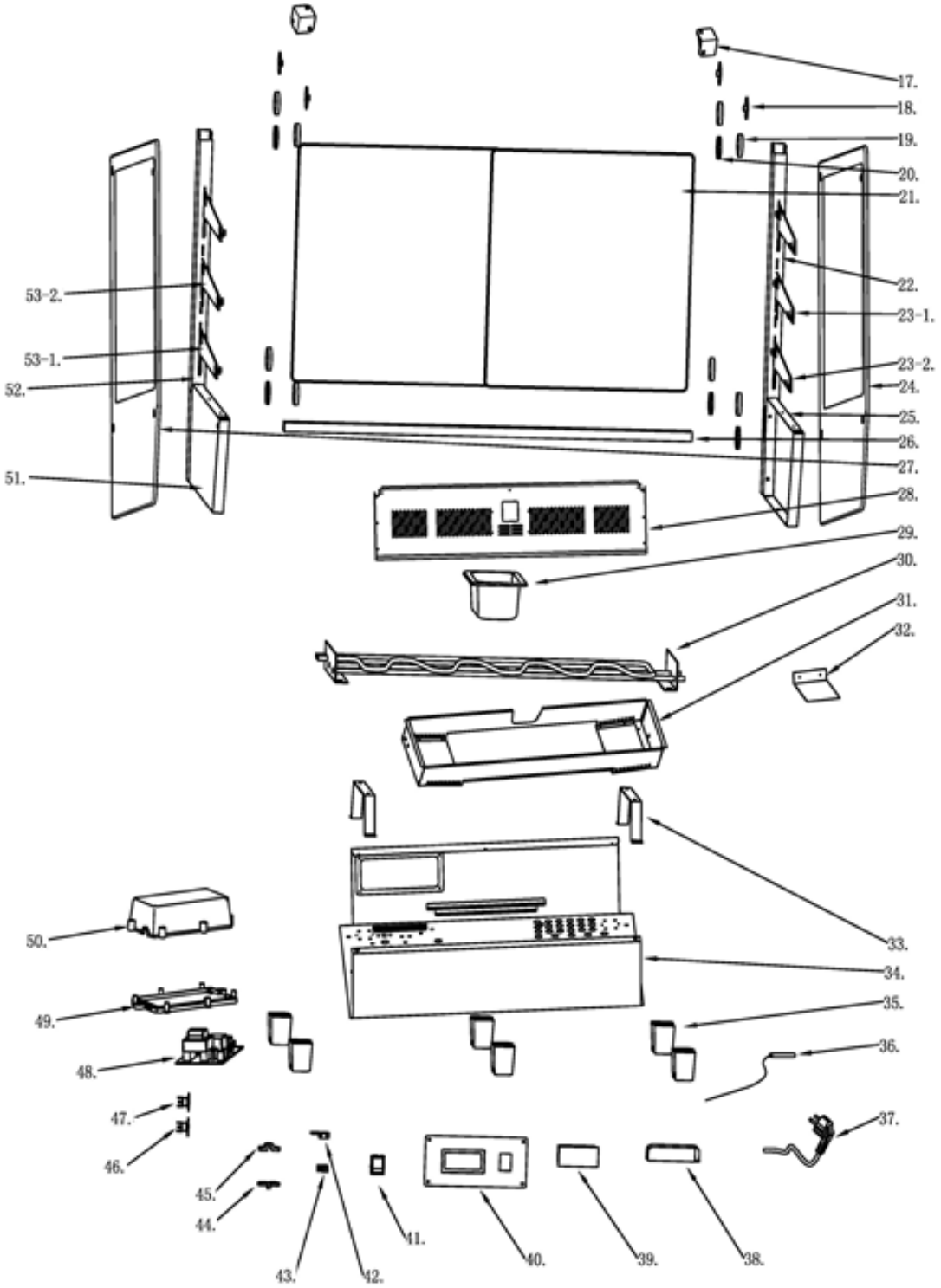

Parts Breakdown

Model DW-CN-0252-5 *47428*

Item No.	Description	Position
AD867	Side Board for Light Cover for 47428	1
AK161	Lampshade for 47428	2
AK162	Glass Chute for 47428	3
AK163	LED for 47428	4
AK164	Glass Inlay for 47428	5
AK165	Top Glass for 47428	6
AK166	Front Glass for 47428	7
AK167	Lower Door Chute for 47428	8, 26
AK168	Probe Fixing Plate for 47428	9
AJ489	Column Gasket for 47428	10
AK169	Internet Rack for 47428	11
AK170	Middle Grid Rack for 47428	12
AK171	Remove the Rack for 47428	13
70675	Sheath of Door Knob for 47428	14
AJ490	Sliding Door Insert for 47428	15
AJ491	Pull out the Door for 47428	16
66238	Fixed Angle for 47428	17
AJ691	Glass Silicone Gasket for 47428	18
79312	Nut Decoration for 47428	19
79313	Nut Gasket for 47428	20

Item No.	Description	Position
AK172	Rear Door Glass for 47428	21
71656	Right Pillar for 47428	22
67314	Bottom Left Small Bracket for 47428	23-1
71653	Right Small Bracket for 47428	23-2
AK146	Right Side Glass for 47428	24
71649	Right Panel for 47428	25
AK147	Left Glass for 47428	27
AK173	Thermal Base Plate for 47428	28
71658	1/9 GN Pan for 47428	29
AK174	Heating Pipe for 47428	30
AK149	Heater Pipe Chassis for 47428	31
AK175	Heating Pipe Baffle for 47428	32
AJ500	Heater Stand for 47428	33
AK176	Mainframe for 47428	34
AJ502	Square Foot Pad for 47428	35
AJ503	Temperature Probe for 47428	36
AJ424	Power Plug for 47428	37
AK177	Power Drive for 47428	38
AJ505	New Display for 47428	39
AJ506	Switch Panel for 47428	40

Item No.	Description	Position
71514	Switch for 47428	41
AD870	Fixed Plate for 47428	42
AD869	Steel Ingot for 47428	43
61246	Wire Clip Holder for 47428	44
61245	Wire Clip Cover for 47428	45
AJ701	120-Degree Thermostat for 47428	46
AJ702	135-Degree Thermostat for 47428	47
AJ507	Small Motherboard for 47428	48
AA051	Control Box Cover for 47428	49
AA050	Control Box for 47428	50
71651	Left Panel for 47428	51
71648	Left Pillar for 47428	52
AJ510	Heater Bracket Chassis for 47428	54
71652	Left Small Bracket for 47428	53-1
67313	Bottom Shelf Bracket Left for 47428	53-2
AJ511	Drawer Baffle Bracket for 47428	55
AK178	Drawer for 47428	56
AJ513	Water Box Baffle for 47428	57
AJ515	Rubber Adjustable Feet for 47428	58

Electrical Schematics

Model DW-CN-0120-5 *47425*
Model DW-CN-0160-5 *47426*
Model DW-CN-0202-5 *47427*
Model DW-CN-0252-5 *47428*

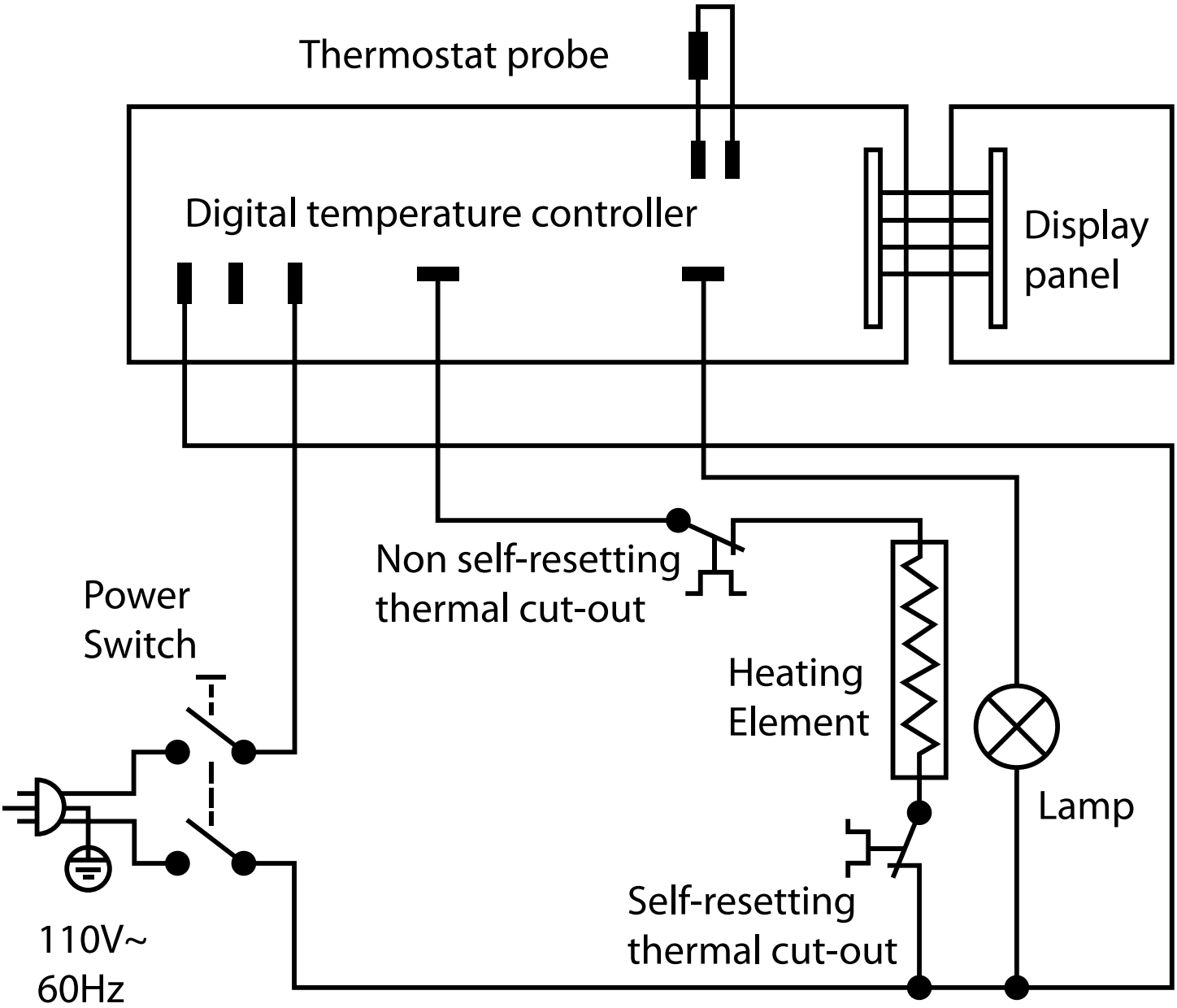

Notes

Warranty Registration

Thank you for purchasing an Omcan product. To register your warranty for this product, complete the information below, tear off the card at the perforation and then send to the address specified below. You can also register online by visiting:

Merci d'avoir acheté un produit Omcan. Pour enregistrer votre garantie pour ce produit, complétez les informations ci-dessous, détachez la carte au niveau de la perforation, puis l'envoyer à l'adresse spécifié ci-dessous. Vous pouvez également vous inscrire en ligne en visitant:

Gracias por comprar un producto Omcan usted. Para registrar su garantía para este producto, complete la información a continuación, cortar la tarjeta en la perforación y luego enviarlo a la dirección indicada a continuación. También puede registrarse en línea en:

https://omcan.com/warranty-registration/

For mailing in Canada

Pour postale au Canada

Por correo en Canadá

OMCAN
PRODUCT WARRANTY REGISTRATION
3115 Pepper Mill Court,
Mississauga, Ontario
Canada, L5L 4X5

For mailing in the US

Pour diffusion aux États-Unis

Por correo en los EE.UU.

OMCAN
PRODUCT WARRANTY REGISTRATION
4450 Witmer Industrial Estates, Unit 4,
Niagara Falls, New York
USA, 14305

or email to: service@omcan.com

Purchaser's Information

Name: _____

Address: _____

City: _____ Province or State: _____ Postal or Zip: _____

Country: _____

Dealer from which Purchased: _____

Dealer City: _____ Dealer Province or State: _____

Invoice: _____

Company Name: _____

Telephone: _____

Email Address: _____

Type of Company:

☐ Restaurant ☐ Bakery ☐ Deli

☐ Butcher ☐ Supermarket ☐ Caterer

☐ Institution *(specify)*: _____

☐ Other *(specify)*: _____

Model Name: _____ Model Number: _____ Serial Number: _____

Machine Description: _____

Date of Purchase (MM/DD/YYYY): _____ Date of Installation (MM/DD/YYYY): _____

Would you like to extend the warranty? ☐ Yes ☐ No

Thank you for choosing Omcan | Merci d'avoir choisi Omcan | Gracias por elegir Omcan

Since 1951 Omcan has grown to become a leading distributor of equipment and supplies to the North American food service industry. Our success over these many years can be attributed to our commitment to strengthen and develop new and existing relationships with our valued customers and manufacturers. Today with partners in North America, Europe, Asia and South America, we continually work to improve and grow the company. We strive to offer customers exceptional value through our qualified local sales and service representatives who provide convenient access to over 6,500 globally sourced products.

Depuis 1951 Omcan a grandi pour devenir un des “leaders” de la distribution des équipements et matériel pour l’industrie des services alimentaires en Amérique du Nord. Notre succès au cours de ces nombreuses années peut être attribué à notre engagement à renforcer et à développer de nouvelles et existantes relations avec nos clients et les fabricants de valeur. Aujourd’hui avec des partenaires en Amérique du Nord, Europe, Asie et Amérique du Sud, nous travaillons continuellement à améliorer et développer l’entreprise. Nous nous efforçons d’offrir à nos clients une valeur exceptionnelle grâce à nos ventes locales qualifiées et des représentants de service qui offrent un accès facile à plus de 6500 produits provenant du monde entier.

Desde 1951 Omcan ha crecido hasta convertirse en un líder en la distribución de equipos y suministros de alimentos en América del Norte industria de servicios. Nuestro éxito en estos años se puede atribuir a nuestro compromiso de fortalecer y desarrollar nuevas relaciones existentes con nuestros valiosos clientes y fabricantes. Hoy con socios de América del Norte, Europa, Asia y América del Sur, que trabajan continuamente para mejorar y crecer la empresa. Nos esforzamos por ofrecer a nuestros clientes valor excepcional a través de nuestro local de ventas y representantes de los servicios que proporcionan un fácil acceso a más de 6,500 productos con origen a nivel mundial.