Display Warmers

Models DW-CN-0120-E, 0160-E, 0202-E
Item 47454, 47455, 47456

Instruction Manual

STOP

DO NOT RETURN THIS PRODUCT TO THE STORE

For questions or assistance with this product call OMCAN Toll Free:
1 800 465 0234
Customer Service
or
visit the Support section of
www.omcan.com

Revised - 06/02/2022

Intertek Intertek

Toll Free: 1-800-465-0234
Fax: 905-607-0234
Email: service@omcan.com
www.omcan.com

MADE IN CHINA

NEMA
5 - 15
125 VAC / 15 AMP
RECEPTACLE

Table of Contents

Model DW-CN-0120-E / Model DW-CN-0160-E / Model DW-CN-0202-E

Section	Page
General Information	3 - 4
Safety and Warranty	4 - 6
Technical Specifications	6
Installation	6 - 7
Operation	7
Maintenance	7 - 8
Parts Breakdown	9 - 14
Electrical Schematics	15
Notes	16 - 18
Warranty Registration	19

General Information

Omcan Manufacturing and Distributing Company Inc., Food Machinery of America, Inc. dba Omcan and Omcan Inc. are not responsible for any harm or injury caused due to any person's improper or negligent use of this equipment. The product shall only be operated by someone over the age of 18, of sound mind, and not under the influence of any drugs or alcohol, who has been trained in the correct operation of this machine, and is wearing authorized, proper safety clothing. Any modification to the machine voids any warranty, and may cause harm to individuals using the machine or in the vicinity of the machine while in operation.

CHECK PACKAGE UPON ARRIVAL

Upon receipt of an Omcan shipment please inspect for external damage. If no damage is evident on the external packaging, open carton to ensure all ordered items are within the box, and there is no concealed damage to the machine. If the package has suffered rough handling, bumps or damage (visible or concealed), please note it on the bill of lading before accepting the delivery and contact Omcan within 24 hours, so we may initiate a claim with the carrier. A detailed report on the extent of the damage caused to the machine must be filled out within three days, from the delivery date shown in the shipping documents. Omcan has no recourse for damaged products that were shipped collect or third party.

Before operating any equipment, always read and familiarize yourself with all operation and safety instructions.

Omcan would like to thank you for purchasing this machine. It's of the utmost importance to save these instructions for future reference. Also save the original box and packaging for shipping the equipment if servicing or returning of the machine is required.

Omcan Fabrication et distribution Companie Limité et Food Machinery d'Amerique, dba Omcan et Omcan Inc. ne sont pas responsables de tout dommage ou blessure causé du fait que toute personne ait utilisé cet équipement de façon irrégulière. Le produit ne doit être exploité que par quelqu'un de plus de 18 ans, saine d'esprit, et pas sous l'influence d'une drogue ou d'acohol, qui a été formé pour utiliser cette machine correctement, et est vêtu de vêtements de sécurité approprié. Toute modification de la machine annule toute garantie, et peut causer un préjudice à des personnes utilisant la machine ou des personnes à proximité de la machine pendant son fonctionnement.

VÉRIFIEZ LE COLIS DÈS RÉCEPTION

Dès réception d'une expédition d'Omcan veuillez inspecter pour dommages externes. Si aucun dommage n'est visible sur l'emballage externe, ouvrez le carton afin de s'assurer que tous les éléments commandés sont dans la boîte, et il n'y a aucun dommage dissimulé à la machine. Si le colis n'a subi aucune mauvaises manipulations, de bosses ou de dommages (visible ou cachée), notez-le sur le bond de livraison avant d'accepter la livraison et contactez Omcan dans les 24 heures qui suivent, pour que nous puissions engager une réclamation auprès du transporteur. Un rapport détaillé sur l'étendue des dommages causés à la machine doit être rempli dans un délai de trois jours, à compter de la date de livraison indiquée dans les documents d'expédition. Omcan n'a aucun droit de recours pour les produits endommagés qui ont été expédiées ou cueilli par un tiers transporteur.

General Information

Avant d'utiliser n'importe quel équipement, toujours lire et vous familiariser avec toutes les opérations et les consignes de sécurité.

Omcan voudrais vous remercier d'avoir choisi cette machine. Il est primordial de conserver ces instructions pour une référence ultérieure. Également conservez la boîte originale et l'emballage pour l'expédition de l'équipement si l'entretien ou le retour de la machine est nécessaire.

Omcan Empresa De Fabricacion Y Distribucion Inc. Y Maquinaria De Alimentos De America, Inc. dba Omcan y Omcan Inc. no son responsables de ningun daño o perjuicío causado por cualquier persona inadecuada o el uso descuidado de este equipo. El producto solo podra ser operado por una persona mayor de 18 años, en su sano juicio y no bajo alguna influencia de droga o alcohol, y que este ha sido entrenado en el correcto funcionamiento de esta máquina, y ésta usando ropa apropiada y autorizada. Cualquier modificación a la máquina anúla la garantía y puede causar daños a las personas usando la máquina mientras esta en el funcionamiento.

REVISE EL PAQUETE A SU LLEGADA

Tras la recepcion de un envio Omcan favor inspeccionar daños externos. Si no hay daños evidentes en el empaque exterior, Habra el carton para asegurararse que todos los articulos solicitados ésten dentro de la caja y no encuentre daños ocultos en la máquina. Si el paquete ha sufrido un manejo de poco cuidado, golpes o daños (visible o oculto) por favor anote en la factura antes de aceptar la entrega y contacte Omcan dentro de las 24 horas, de modo que podamos iniciar una reclamación con la compañia. Un informe detallado sobre los daños causados a la máquina debe ser llenado en el plazo de tres días, desde la fecha de entrega que se muestra en los documentos de envío. Omcan no tiene ningun recurso por productos dañados que se enviaron a recoger por terceros.

Antes de utilizar cualquier equipo, siempre lea y familiarizarse con todas las instrucciones de funcionamiento y seguridad.

Omcan le gustaría darle las gracias por la compra de esta máquina. Es de la mayor importancia para salvar estas instrucciones para futuras consultas. Además, guarda la caja original y el embalaje para el envío del equipo si servicio técnico o devolución de la máquina que se requiere.

Safety and Warranty

- To prevent hazards and to ensure optimum efficiency, no modifications or alterations to the device that are not explicitly approved by the manufacturer may be undertaken. This device may only be operated in technically proper and safe conditions.
- The device should never be left unattended during operation. Keep children away.
- Preserve this manual safely. When passing on/selling the device to a third party, the manual must be handed over along with the device.
- Every person using the device must act in accordance to the manuals and under consideration of the

safety advice.
- The device is to be used indoors only.
- Any technical interventions, as well as assembly and maintenance are to be made by a qualified customer service only.
- This appliance is not intended for use by persons (including children) with reduced physical, sensory or mental capabilities, or lack of experience and knowledge, unless they have been given supervision or instruction concerning use of the appliance by a person responsible for their safety.
- Children should be supervised to ensure that they do not play with the appliance.

Do not run this unit for extended periods of time, it is not designed to cook food.

PREPARATION AND POWER SUPPLY

Exclusive power outlet The power outlet must be in close proximity to the ground.	**No shared power outlets** Warmer cable should never share the power outlet with any other appliance, as cable will overheat and may result in a fire.
Protect cables Extra caution should be used when handling cables, as broken or damaged cables can cause sparking and may result in a fire.	**No water flushing** Never flush the warmer surface. This can cause leakage, which may result in electrical damage or fire.
Never store flammables and explosives No explosives or flammables should be stored in, or in proximity to, the warmer, such as gasoline, alcohol, and adhesives.	

Omcan display warmers are engineered and designed to maintain previously cooked foods at serving temperatures. Improper use of this machine's maximum temperature for extended periods of time, in an attempt to thoroughly cook food products, is prohibited. Such operation will void the manufacturer's warranty and may result in under cooked and therefore unsafe food.

RESIDENTIAL USERS: Vendor assumes no liability for parts or labor coverage for component failure or other damages resulting from installation in non-commercial or residential applications. The right is reserved to deny shipment for residential usage; if this occurs, you will be notified as soon as possible.

1 YEAR PARTS AND LABOUR WARRANTY

Within the warranty period, contact Omcan Inc. at 1-800-465-0234 to schedule an Omcan authorized service technician to repair the equipment locally.

Unauthorized maintenance will void the warranty. Warranty covers electrical and part failures, not improper use.

Please see https://omcan.com/disclaimer for complete info.

Safety and Warranty

WARNING:

The packaging components are classified as normal solid urban waste and can therefore be disposed of without difficulty.

In any case, for suitable recycling, we suggest disposing of the products separately (differentiated waste) according to the current norms.

DO NOT DISCARD ANY PACKAGING MATERIALS IN THE ENVIRONMENT!

Technical Specifications

MFR	DW-CN-0120-E	DW-CN-0160-E	DW-CN-0202-E
Capacity	120 L / 4.24 cu.ft.	160 L / 5.65 cu.ft.	202 L / 7.14 cu.ft.
Power	1.8 kW		
Electrical	115V / 60Hz / 1		
Storage Temperature Range	30 - 82.2°C / 86 - 180°F		
Top Shelf Dimensions	25” x 13.2” 636 x 335mm	32” x 13.2” 813 x 335mm	45.9” x 13.2” 1167 x 335mm
Middle Shelf Dimensions	25” x 14.4” 636 x 367mm	32” x 14.4” 813 x 367mm	45.9” x 14.4” 1167 x 367mm
Bottom Shelf Dimensions	25” x 15.7” 636 x 398mm	32” x 15.7” 813 x 398mm	45.9” x 15.7” 1167 x 398mm
Shelf load Capacity	33.1 lbs. / 15 kgs.		
Weight	77 lbs. / 34.9 kgs.	94 lbs. / 42.6 kgs.	124 lbs. / 56.2 kgs.
Packaging Weight	83 lbs. / 37.6 kgs.	100 lbs. / 45.4 kgs.	130 lbs. / 59 kgs.
Dimensions	26.7” x 22.4” x 26.4” 678 x 569 x 671mm	33.7” x 22.4” x 26.4” 856 x 569 x 671mm	48” x 22.4” x 26.4” 1219 x 569 x 671mm
Packaging Dimensions	29.5” x 25.5” x 29.6” 749 x 648 x 752mm	36.5” x 25.5” x 29.6” 927 x 648 x 752mm	50.8” x 25.5” x 29.6” 1290 x 648 x 752mm
Item Number	47454	47455	47456

Installation

- Place the device on top of an even surface which supports the weight of the device and is not heat

Installation

sensitive.
- The device should never be placed on a flammable surface (such as table cloth, carpet, ect).
- You must not position the device near open fireplaces, electric ovens, arc furnaces/electric heaters or other heat sources.
- Position the device in such a way that the plug is easily accessible.

Operation

- Before first use, clean the inner sides and the shelves with a soft cloth and a mild cleaning agent. Afterwards, dry the device thoroughly.
- Remove the water bowl from the device. The water bowl is installed inside the device and then fill the water bowl with water.
- Connect the device to a single grounded power socket.
- Set the temperature as required for respective foods. You may adjust the desired temperature in the range between 30°C-90°C / 86°F-194°F.
- The temperature inside of the hot display can be read from the front display.
- Put the foods in appropriate containers before placing them inside the hot display and shut it by using the sliding door.
- Some of the device parts become very hot, always use safety gloves when placing or removing foods.
- The foods are kept warm at the temperature set by you previously.
- In order to place or remove foods, you may open the door at rear side.
- Switch on the inner light when required using the light switch of the device.
- Disconnect the device from the power socket when the device is not in use.

Maintenance

- Before beginning with repair or cleaning, make sure the device has been disconnected from the power socket and has cooled down.
- Do not use any acid agents and make sure no water enters the device.
- To protect yourself from the electric shock, never immerse the device, its cables or plug in water, or other liquids.
- Do not use any kind of pressure washer jet for cleaning the device.

CLEANING

- The device should be cleaned regularly.
- Clean the device from the inside and outside with a soft, damp cloth and a mild cleaning agent.
- Clean the shelves and the housing with a soft, damp cloth and a mild cleaning agent.
- Clean the water bowl regularly. Calcifications on the water bowl may be removed with common agents or

Maintenance

liquids.
- Only use a soft cloth and make sure you never use any kind of abrasive agents or pads which could scratch the surface.
- After the cleaning procedure, you should use a soft, dry cloth to wipe dry and polish the surface.
- Make sure the device has been cleaned properly before storing it in a dry place.

MAINTENANCE

- Check the mains lead from time to time to ensure it is not damaged in any way. Never use the device if the lead is damaged. If the lead is damaged, it must be replaced by a qualified electrician.
- Only a qualified technician should carry out repairs and maintenance of the device. Do not attempt to repair the device by yourself.

CAUTIONS

Children should be supervised to ensure that they do not play with the appliance.
- If the supply cord is damaged, it must be replaced by the manufacturer, its service agent or similarly qualified persons in order to avoid a hazard.

Parts Breakdown

Model DW-CN-0120-E *47454*

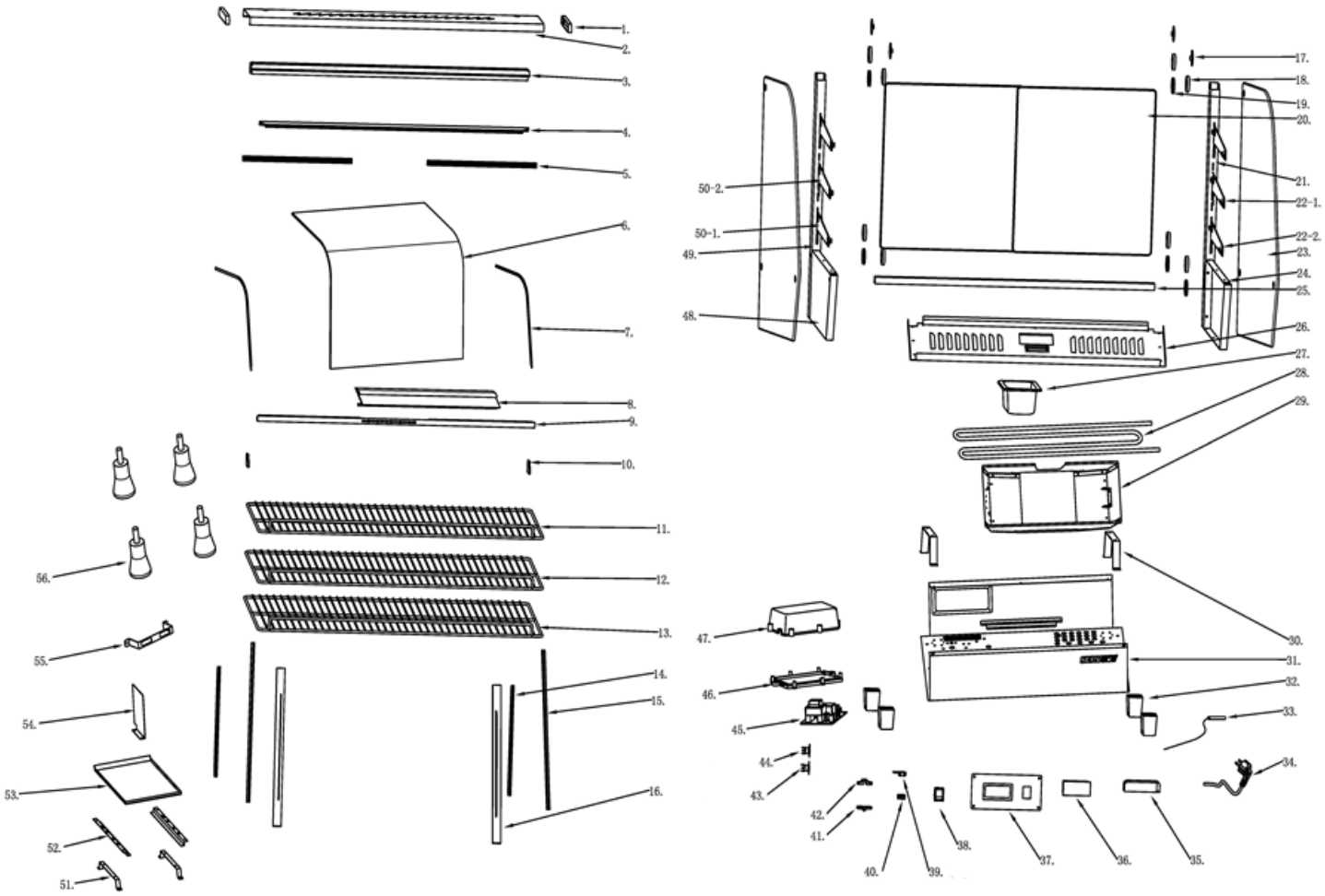

Parts Breakdown

Model DW-CN-0120-E *47454*

Item No.	Description	Position
AD867	Side Board for Light Cover for 47454	1
AJ486	Lampshade for 47454	2
AD848	Sliding Glass Track for 47454	3
AJ487	LED for 47454	4
AD849	Sealing Strip for 47454	5
AD850	Curved Front Glass for 47454	6
AD851	Sealing Strip (Thin) for 47454	7
AD852	Sealing Strip for 47454	8
AJ488	Probe Fixing Plate for 47454	9
AJ489	Column Gasket	10
30757	Shelf 2 for 47454	11
30756	Shelf 1 for 47454	12
AD854	Shelf 3 for 47454	13
70675	Sheath of Door Knob for 47454	14
AJ490	Sliding Door Insert for 47454	15
AJ491	Pull out the Door for 47454	16
71641	Decoration Nut Gasket for 47454	17
79312	Nut Decoration for 47454	18
79313	Nut Gasket for 47454	19
AJ492	Rear Door Glass for 47454	20

Item No.	Description	Position
71656	Right Pillar for 47454	21
AJ493	Right Bracket on the Net Rack for 47454	22-1
AJ494	Right Stand under the Net Rack for 47454	22-2
AJ495	Side Glass for 47454	23
71649	Right Panel for 47454	24
AJ496	Back Door Chute for 47454	25
AJ497	Thermal Base Plate for 47454	26
71658	1/9 GN Pan for 47454	27
AJ498	U-Shaped Heating Pipe for 47454	28
AJ499	Heater Pipe Chassis for 47454	29
AJ500	Heater Stand for 47454	30
AJ501	Mainframe for 47454	31
AJ502	Square Foot Pad for 47454	32
AJ503	Temperature Probe for 47454	33
AJ424	Power Plug for 47454	34
AJ504	Power Drive for 47454	35
AJ505	New Display for 47454	36
AJ506	Switch Panel for 47454	37
71514	Switch for 47454	38
AD870	Fixed Plate for 47454	39

Item No.	Description	Position
AD869	Steel Ingot for 47454	40
61246	Wire Clip Holder for 47454	41
61245	Wire Clip Cover for 47454	42
71662	Control 125°C for 47454	43
71661	Control 150°C for 47454	44
AJ507	Small Motherboard for 47454	45
AA051	Control Box Cover for 47454	46
AA050	Control Box for 47454	47
71651	Left Panel for 47454	48
71648	Left Pillar for 47454	49
AJ508	Left Stand under the Net Rack for 47454	50-1
AJ509	Left Bracket on the Net Rack for 47454	50-2
AJ510	Heater Bracket Chassis for 47454	51
AJ511	Drawer Baffle Bracket for 47454	52
AJ512	Drawer for 47454	53
AJ513	Water Box Baffle for 47454	54
AJ514	Heating Pipe Bracket for 47454	55
AJ515	Rubber Adjustable Feet for 47454	56

Parts Breakdown

Model DW-CN-0160-E *47455*

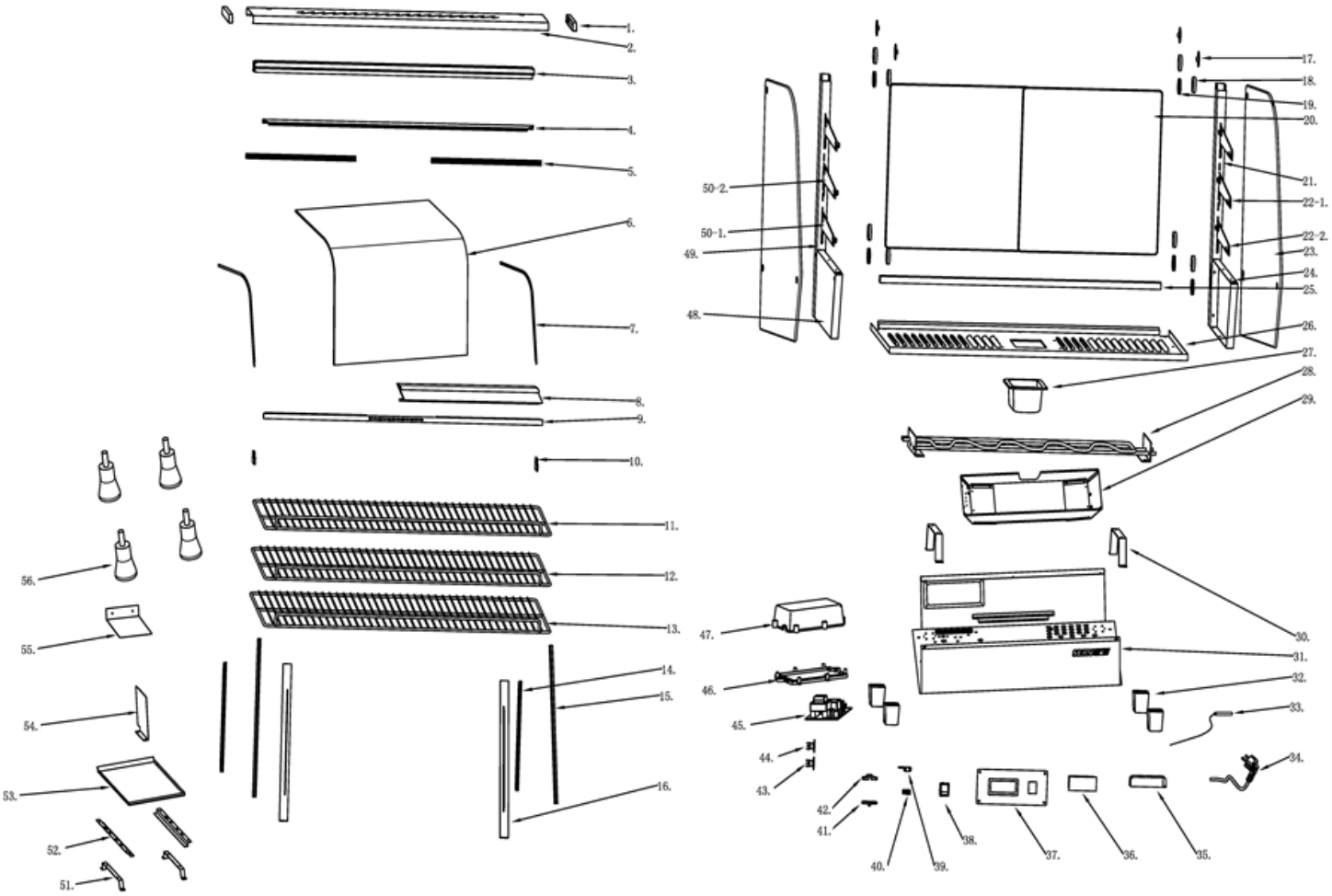

Parts Breakdown

Model DW-CN-0160-E *47455*

Item No.	Description	Position
AD867	Side Board for Light Cover for 47455	1
AJ516	Lampshade for 47455	2
71682	Sliding Glass Track for 47455	3
AJ517	LED for 47455	4
AD871	Sealing Strip for 47455	5
71681	Curved Front Glass for 47455	6
AD851	Sealing Strip (Thin) for 47455	7
AD872	Sealing Strip for 47455	8
AJ518	Probe Fixing Plate for 47455	9
AJ489	Column Gasket for 47455	10
71683	Chrome Shelf 1 for 47455	11
71684	Chrome Shelf 2 for 47455	12
71685	Chrome Shelf 3 for 47455	13
70675	Sheath of Door Knob for 47455	14
AJ490	Sliding Door Insert for 47455	15
AJ491	Pull out the Door for 47455	16
71641	Decoration Nut Gasket for 47455	17
79312	Nut Decoration for 47455	18
79313	Nut Gasket for 47455	19
AJ519	Rear Door Glass for 47455	20

Item No.	Description	Position
71656	Right Pillar for 47455	21
AJ493	Right Bracket on the Net Rack for 47455	22-1
AJ494	Right Stand under the Net Rack for 47455	22-2
AJ495	Side Glass for 47455	23
71649	Right Panel for 47455	24
AJ520	Back Door Chute for 47455	25
AJ521	Thermal Base Plate for 47455	26
71658	1/9 GN Pan for 47455	27
AJ522	V-Shaped Heating Pipe for 47455	28
AJ523	Heater Pipe Chassis for 47455	29
AJ500	Heater Stand for 47455	30
AJ524	Mainframe for 47455	31
AJ502	Square Foot Pad for 47455	32
AJ503	Temperature Probe for 47455	33
AJ424	Power Plug for 47455	34
AJ525	Power Drive for 47455	35
AJ505	New Display for 47455	36
AJ506	Switch Panel for 47455	37
71514	Switch for 47455	38
AD870	Fixed Plate for 47455	39

Item No.	Description	Position
AD869	Steel Ingot for 47455	40
61246	Wire Clip Holder for 47455	41
61245	Wire Clip Cover for 47455	42
71662	Control 125°C for 47455	43
71661	Control 150°C for 47455	44
AJ507	Small Motherboard for 47455	45
AA051	Control Box Cover for 47455	46
AA050	Control Box for 47455	47
71651	Left Panel for 47455	48
71648	Left Pillar for 47455	49
AJ508	Left Stand under the Net Rack for 47455	50-1
AJ509	Left Bracket on the Net Rack for 47455	50-2
AJ510	Heater Bracket Chassis for 47455	51
AJ511	Drawer Baffle Bracket for 47455	52
AJ526	Drawer for 47455	53
AJ513	Water Box Baffle for 47455	54
AJ527	Heating Pipe Baffle for 47455	55
AJ515	Rubber Adjustable Feet for 47455	56

Parts Breakdown

Model DW-CN-0202-E *47456*

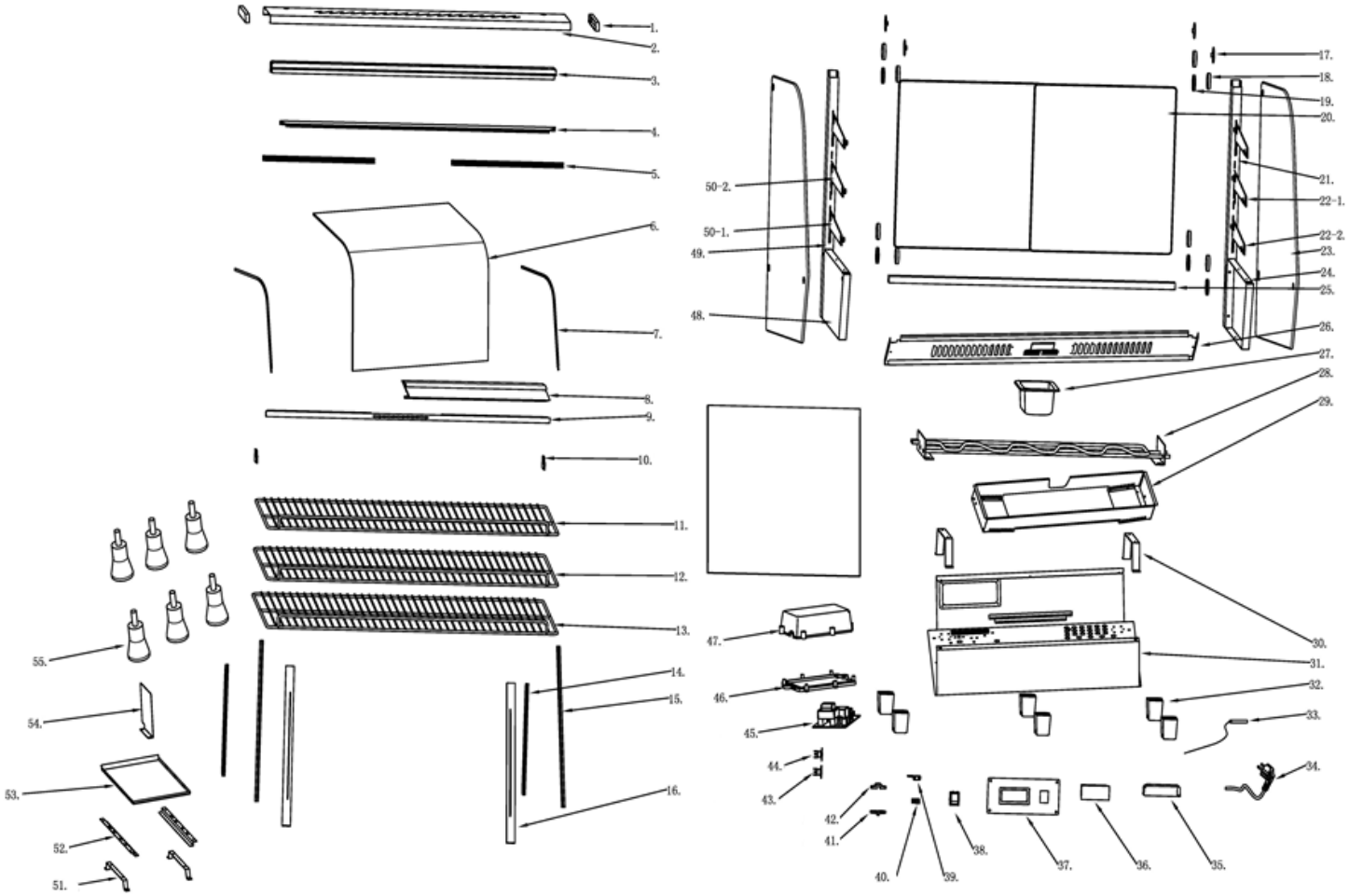

Parts Breakdown

Model DW-CN-0202-E *47456*

Item No.	Description	Position
AD867	Side Board for Light Cover for 47456	1
AJ681	Lampshade for 47456	2
AJ682	Glass Chute for 47456	3
AJ683	LED for 47456	4
AJ684	Glass Inlay for 47456	5
AJ685	Curved Front Glass for 47456	6
AD851	Sealing Strip (Thin) for 47456	7
AJ686	Lower the Seal for 47456	8
AJ687	Probe Fixing Plate for 47456	9
AJ489	Column Gasket for 47456	10
AJ688	Internet Rack for 47456	11
AJ689	Middle Grid Rack for 47456	12
AJ690	Remove the Rack for 47456	13
70675	Sheath of Door Knob for 47456	14
AJ490	Sliding Door Insert for 47456	15
AJ491	Pull Out the Door for 47456	16
AJ691	Glass Silicone Gasket for 47456	17
79312	Nut Decoration for 47456	18
79313	Nut Gasket for 47456	19

Item No.	Description	Position
AJ692	Rear Door Glass for 47456	20
71656	Right Pillar for 47456	21
AJ693	Right Bracket on the Net Rack for 47456	22-1
AJ694	Right Stand Under the Net Rack for 47456	22-2
AJ495	Side Glass for 47456	23
71649	Right Panel for 47456	24
AJ695	Back Door Chute for 47456	25
AJ696	Thermal Base Plate for 47456	26
71658	1/9 GN Pan for 47456	27
AJ697	V-Shaped Heating Pipe for 47456	28
AJ698	Heater Pipe Chassis for 47456	29
AJ500	Heater Stand for 47456	30
AJ699	Mainframe for 47456	31
AJ502	Square Foot Pad for 47456	32
AJ503	Temperature Probe for 47456	33
AJ424	Power Plug for 47456	34
AJ700	Power Drive for 47456	35
AJ505	New Display for 47456	36
AJ506	Switch Panel for 47456	37

Item No.	Description	Position
71514	Switch for 47456	38
AD870	Fixed Plate for 47456	39
AD869	Steel Ingot for 47456	40
61246	Wire Clip Holder for 47456	41
61245	Wire Clip Cover for 47456	42
AJ701	120-Degree Thermostat for 47456	43
AJ702	135-Degree Thermostat for 47456	44
AJ507	Small Motherboard for 47456	45
AA051	Control Box Cover for 47456	46
AA050	Control Box for 47456	47
71651	Left Panel for 47456	48
71648	Left Pillar for 47456	49
AJ703	Left Stand Under the Net Rack for 47456	50-1
AJ704	Left Bracket on the Net Rack for 47456	50-2
AJ510	Heater Bracket Chassis for 47456	51
AJ511	Drawer Baffle Bracket for 47456	52
AJ705	Drawer for 47456	53
AJ513	Water Box Baffle for 47456	54
AJ515	Rubber Adjustable Feet for 47456	55

Electrical Schematics

Model DW-CN-0120-E *47454*
Model DW-CN-0160-E *47455*
Model DW-CN-0202-E *47456*

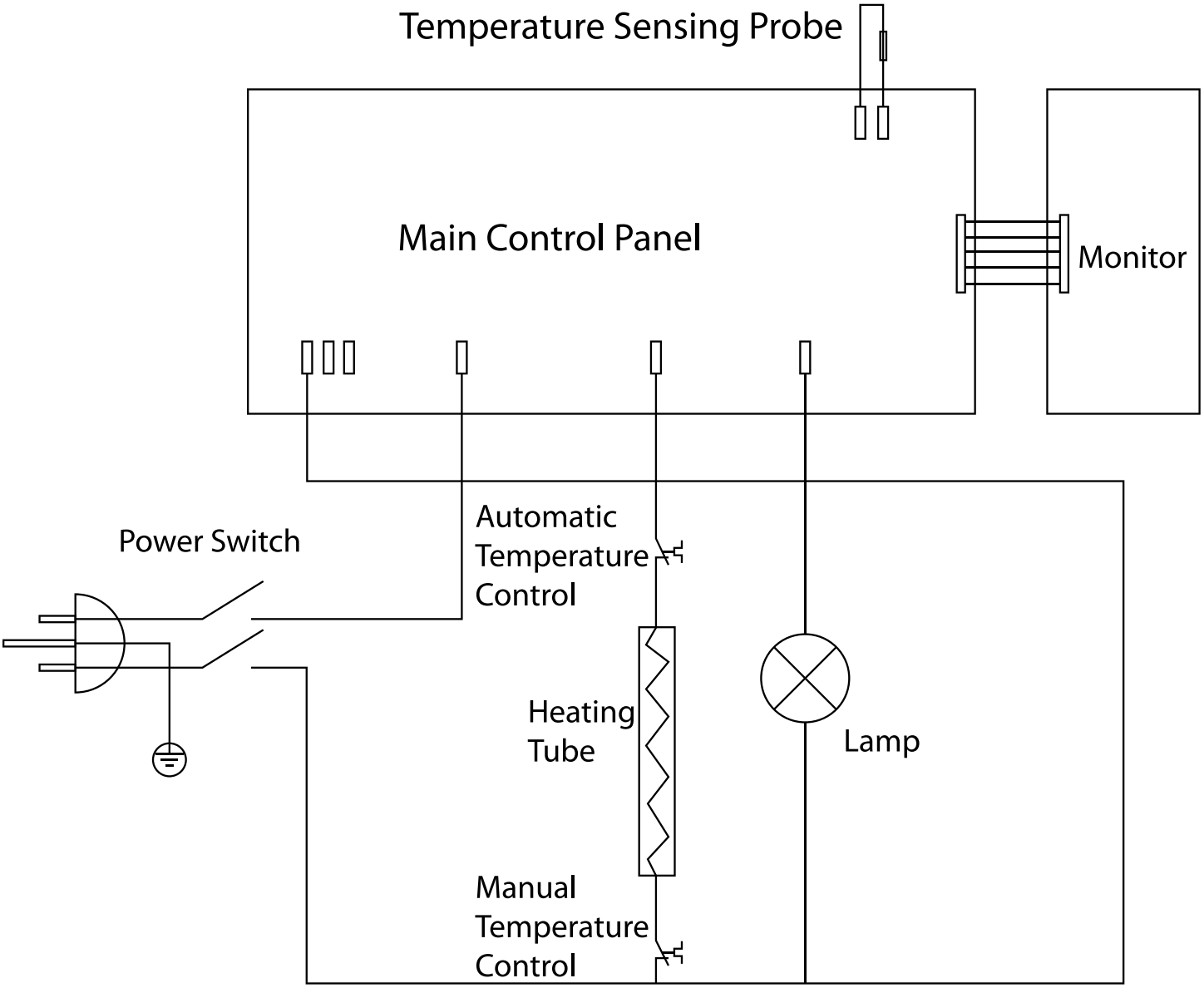

Notes

Notes

Notes

Warranty Registration

Thank you for purchasing an Omcan product. To register your warranty for this product, complete the information below, tear off the card at the perforation and then send to the address specified below. You can also register online by visiting:

Merci d'avoir acheté un produit Omcan. Pour enregistrer votre garantie pour ce produit, complétez les informations ci-dessous, détachez la carte au niveau de la perforation, puis l'envoyer à l'adresse spécifié ci-dessous. Vous pouvez également vous inscrire en ligne en visitant:

Gracias por comprar un producto Omcan usted. Para registrar su garantía para este producto, complete la información a continuación, cortar la tarjeta en la perforación y luego enviarlo a la dirección indicada a continuación. También puede registrarse en línea en:

https://omcan.com/warranty-registration/

For mailing in Canada

Pour postale au Canada

Por correo en Canadá

OMCAN
PRODUCT WARRANTY REGISTRATION
3115 Pepper Mill Court,
Mississauga, Ontario
Canada, L5L 4X5

For mailing in the US

Pour diffusion aux États-Unis

Por correo en los EE.UU.

OMCAN
PRODUCT WARRANTY REGISTRATION
4450 Witmer Industrial Estates, Unit 4,
Niagara Falls, New York
USA, 14305

or email to: service@omcan.com

Purchaser's Information

Name: _____

Address: _____

City: _____ Province or State: _____ Postal or Zip: _____

Country: _____

Dealer from which Purchased: _____

Dealer City: _____ Dealer Province or State: _____

Invoice: _____

Company Name: _____

Telephone: _____

Email Address: _____

Type of Company:

☐ Restaurant ☐ Bakery ☐ Deli

☐ Butcher ☐ Supermarket ☐ Caterer

☐ Institution *(specify)*: _____

☐ Other *(specify)*: _____

Model Name: _____ Model Number: _____ Serial Number: _____

Machine Description: _____

Date of Purchase (MM/DD/YYYY): _____ Date of Installation (MM/DD/YYYY): _____

Would you like to extend the warranty? ☐ Yes ☐ No

Thank you for choosing Omcan | Merci d'avoir choisi Omcan | Gracias por elegir Omcan

Since 1951 Omcan has grown to become a leading distributor of equipment and supplies to the North American food service industry. Our success over these many years can be attributed to our commitment to strengthen and develop new and existing relationships with our valued customers and manufacturers. Today with partners in North America, Europe, Asia and South America, we continually work to improve and grow the company. We strive to offer customers exceptional value through our qualified local sales and service representatives who provide convenient access to over 6,500 globally sourced products.

Depuis 1951 Omcan a grandi pour devenir un des “leaders” de la distribution des équipements et matériel pour l’industrie des services alimentaires en Amérique du Nord. Notre succès au cours de ces nombreuses années peut être attribué à notre engagement à renforcer et à développer de nouvelles et existantes relations avec nos clients et les fabricants de valeur. Aujourd’hui avec des partenaires en Amérique du Nord, Europe, Asie et Amérique du Sud, nous travaillons continuellement à améliorer et développer l’entreprise. Nous nous efforçons d’offrir à nos clients une valeur exceptionnelle grâce à nos ventes locales qualifiées et des représentants de service qui offrent un accès facile à plus de 6500 produits provenant du monde entier.

Desde 1951 Omcan ha crecido hasta convertirse en un líder en la distribución de equipos y suministros de alimentos en América del Norte industria de servicios. Nuestro éxito en estos años se puede atribuir a nuestro compromiso de fortalecer y desarrollar nuevas relaciones existentes con nuestros valiosos clientes y fabricantes. Hoy con socios de América del Norte, Europa, Asia y América del Sur, que trabajan continuamente para mejorar y crecer la empresa. Nos esforzamos por ofrecer a nuestros clientes valor excepcional a través de nuestro local de ventas y representantes de los servicios que proporcionan un fácil acceso a más de 6,500 productos con origen a nivel mundial.