Parts Breakdown

Model MG-CN-0012-E *21720*

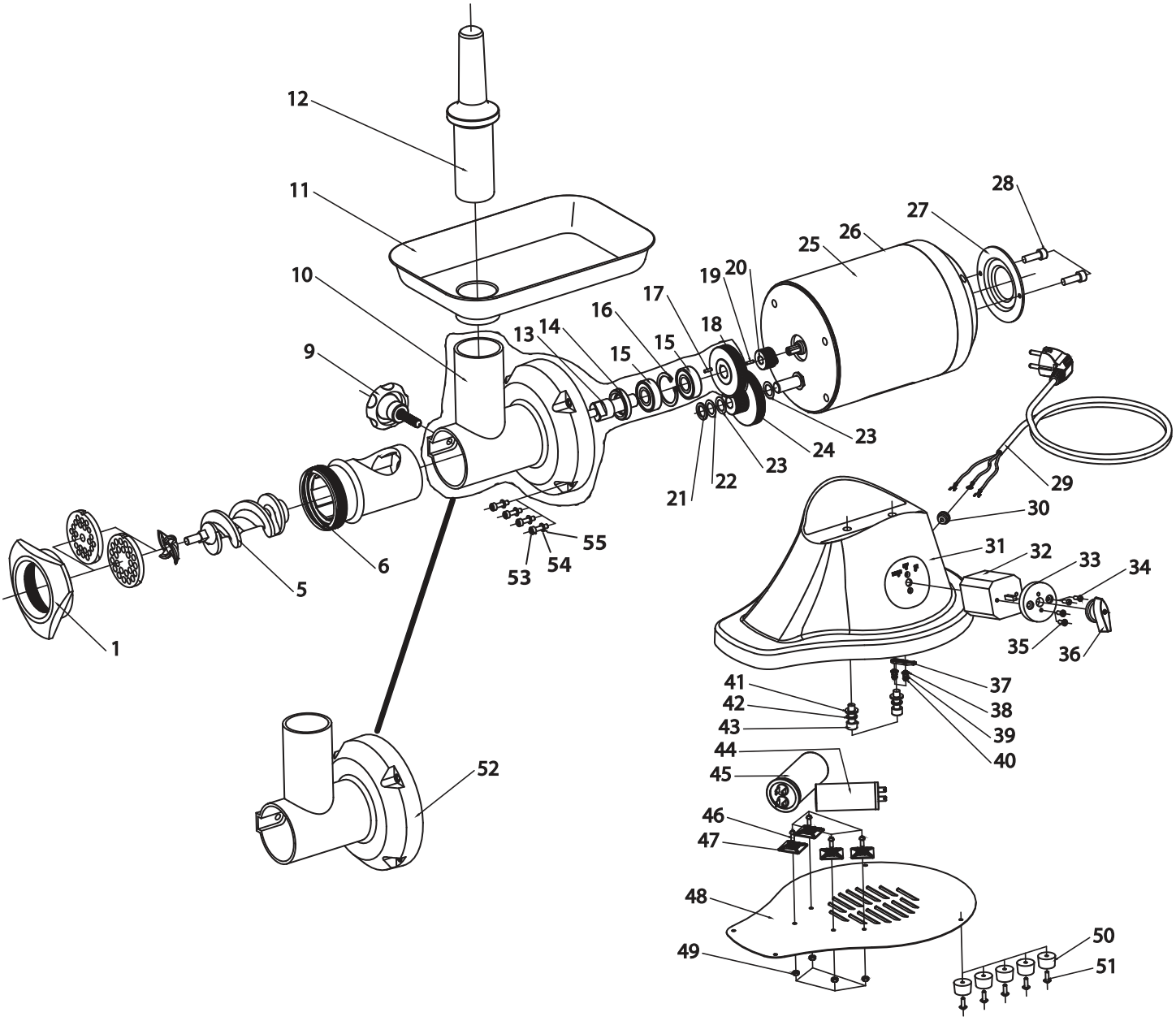

Parts Breakdown

Model MG-CN-0012-E *21720*

Item No.	Description	Position
14663	Locking Hand Screw for 21720	1
14664	Auger for 21720	5
14665	Auger Tube for 21720	6
14666	Locking Bolt for 21720	9
76319	Grinder Head for 21720	10
23763	Meat Tray for 21720	11
14667	Meat Pusher for 21720	12
14668	Pin for 21720	13
14669	O-Ring B24x40x7 for 21720	14
14670	Bearing for 21720	15
76320	O-Ring for 21720	16
44943	Pin 3x12 for 21720	17
14671	Gear for 21720	18
76321	Pin 3x16 for 21720	19
14672	Gear for 21720	20
76322	Washer for 21720	21

Item No.	Description	Position
76323	High Temperature-Proof for 21720	22
76324	Stainless Steel Washer 14x0.2 for 21720	23
14673	Gear for 21720	24
39060	Motor for 21720	25
76325	Frame for 21720	26
23764	Chromed Back Cover for 21720	27
76326	Screw M4x8 for 21720	28
76327	Electrical Cord for 21720	29
76328	Cable Clip for 21720	30
76329	Base for 21720	31
14674	Switch for 21720	32 - 35
14675	Switch Knob for 21720	36
72252	Clip for 21720	37
72253	Washer for 21720	38
72254	Washer for 21720	39
72255	Bolt M4x10 for 21720	40

Item No.	Description	Position
76303	Washer 8x1 for 21720	41
45027	Washer for 21720	42
45028	Bolt M8x24 for 21720	43
14676	Capacitor (40uF 250VAC) for 21720	44
14677	Capacitor (75uF 250VAC) for 21720	45
45029	Screw M4x10 for 21720	46
45030	Binder for 21720	47
45031	Bottom Cover for 21720	48
45032	Nut M4 for 21720	49
45033	Rubber Feet for 21720	50
45034	Bolt M4x12 for 21720	51
14678	Grinder Head and Gear Box Assembly for 21720	52
31598	Socket Head Cap Screw M5x25 for 21720	53
31599	Spring Washer 5 for 21720	54
31600	Washer 5 for 21720	55