ELECTRCIAL SCHEMATIC AFMG-52-4
STARTING WITH SERIAL NO
WITH PNEUMATIC FOOT SWITCH
THREE PHASE

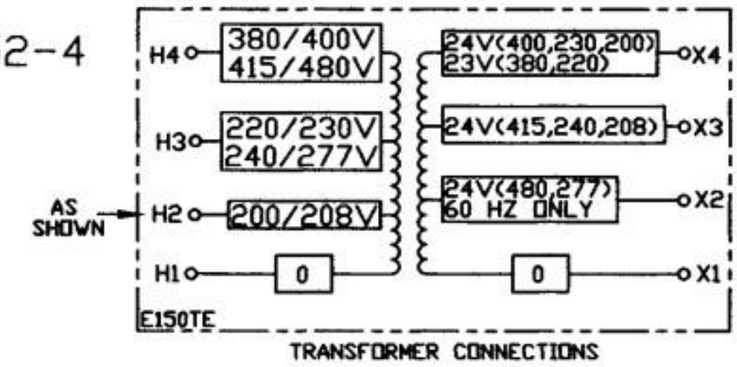

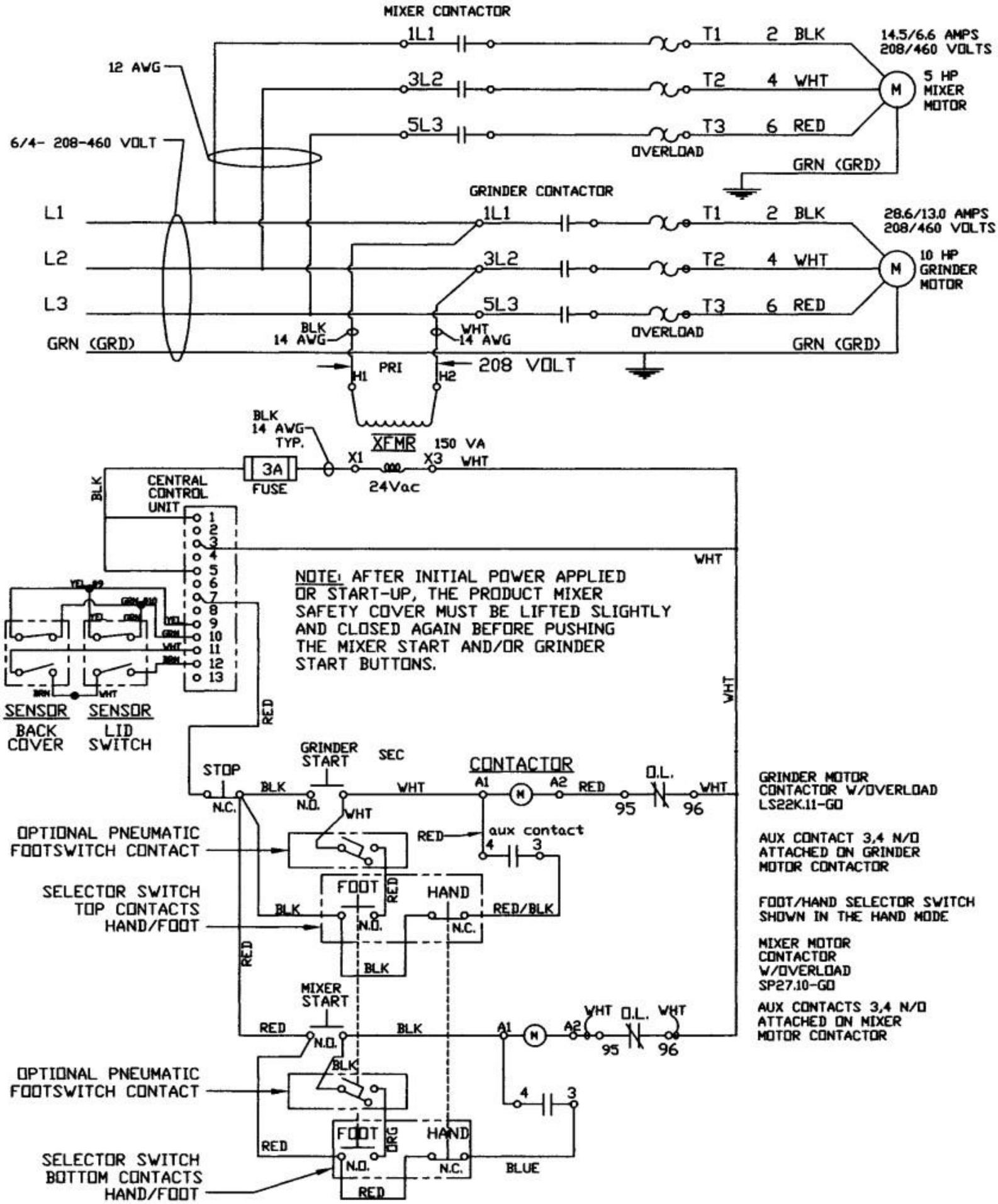

ELECTRCIAL SCHEMATIC AFMG-52-4
STARTING WITH SERIAL NO 524001
WITH ELECTRIC FOOT SWITCH
THREE PHASE

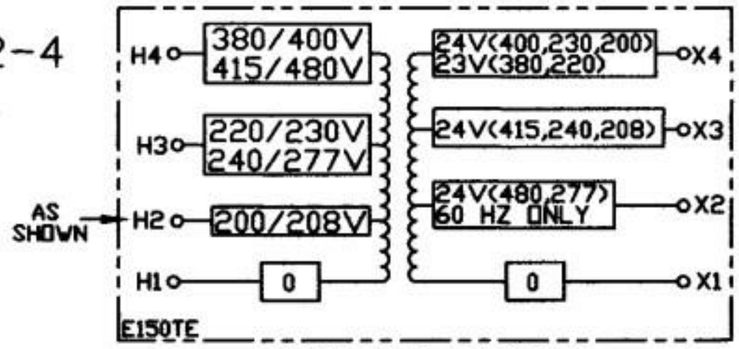
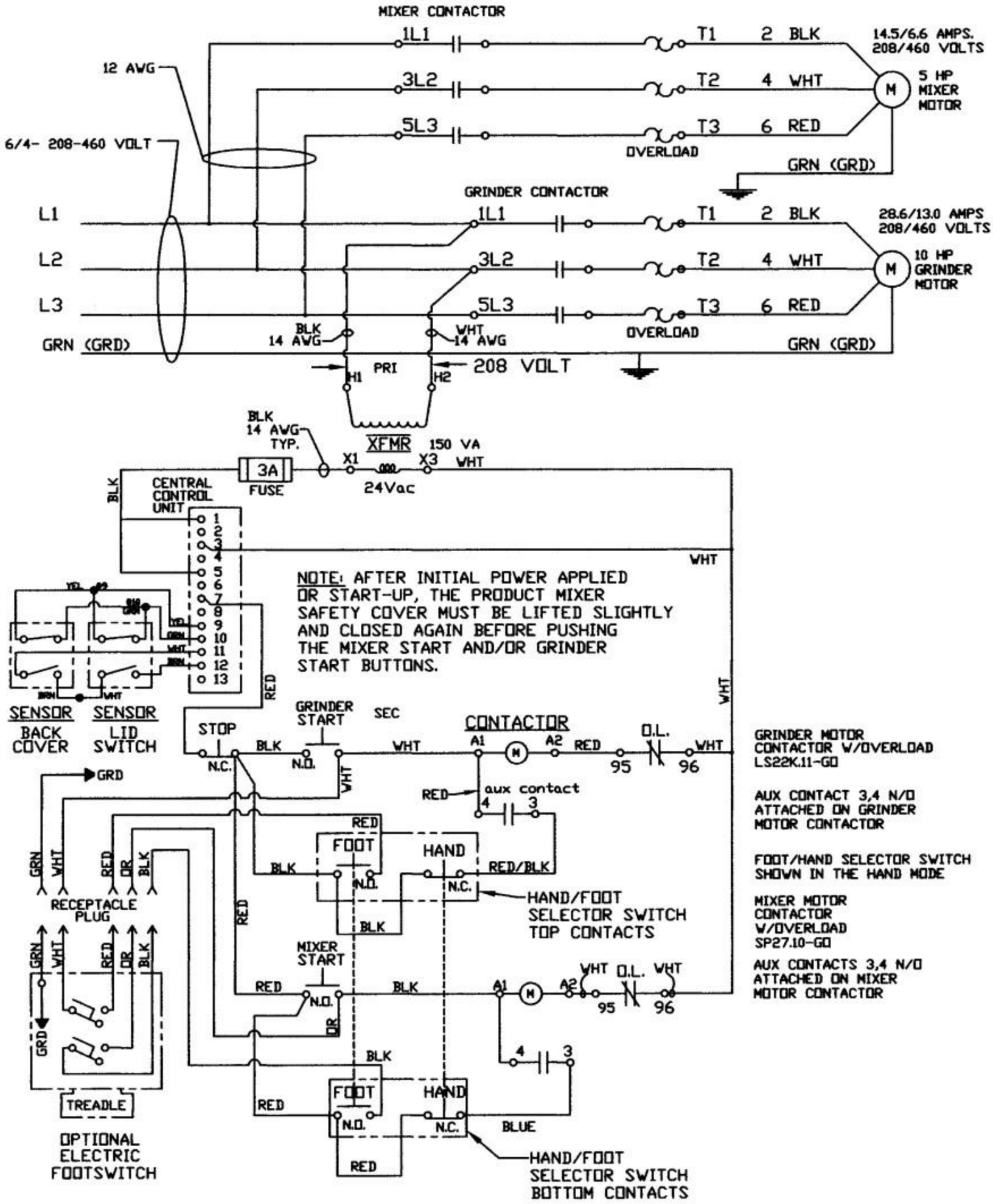
TRANSFORMER CONNECTIONS