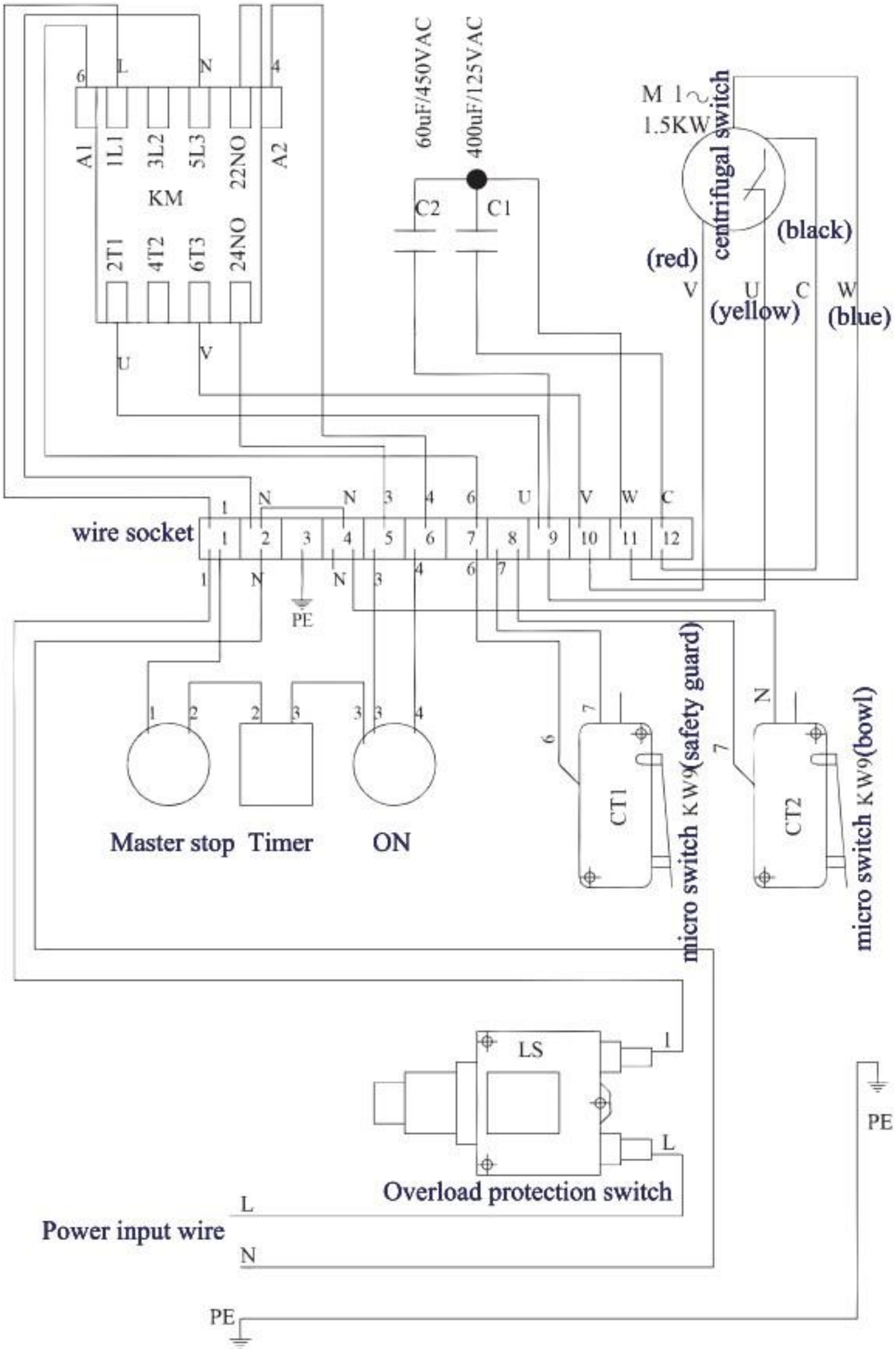
KM
A1
1L1
3L2
5L3
22NO
A2
2T1
4T2
6T3
24NO
60uF/450VAC
400uF/125VAC
C2
C1
M 1~
1.5KW
centrifugal switch
(black)
(red)
V
U
C
W
(yellow)
(blue)
wire socket
PE
Master stop
Timer
ON
CT1
CT2
micro switch KW9(safety guard)
micro switch KW9(bowl)
LS
Overload protection switch
Power input wire
L
N
PE

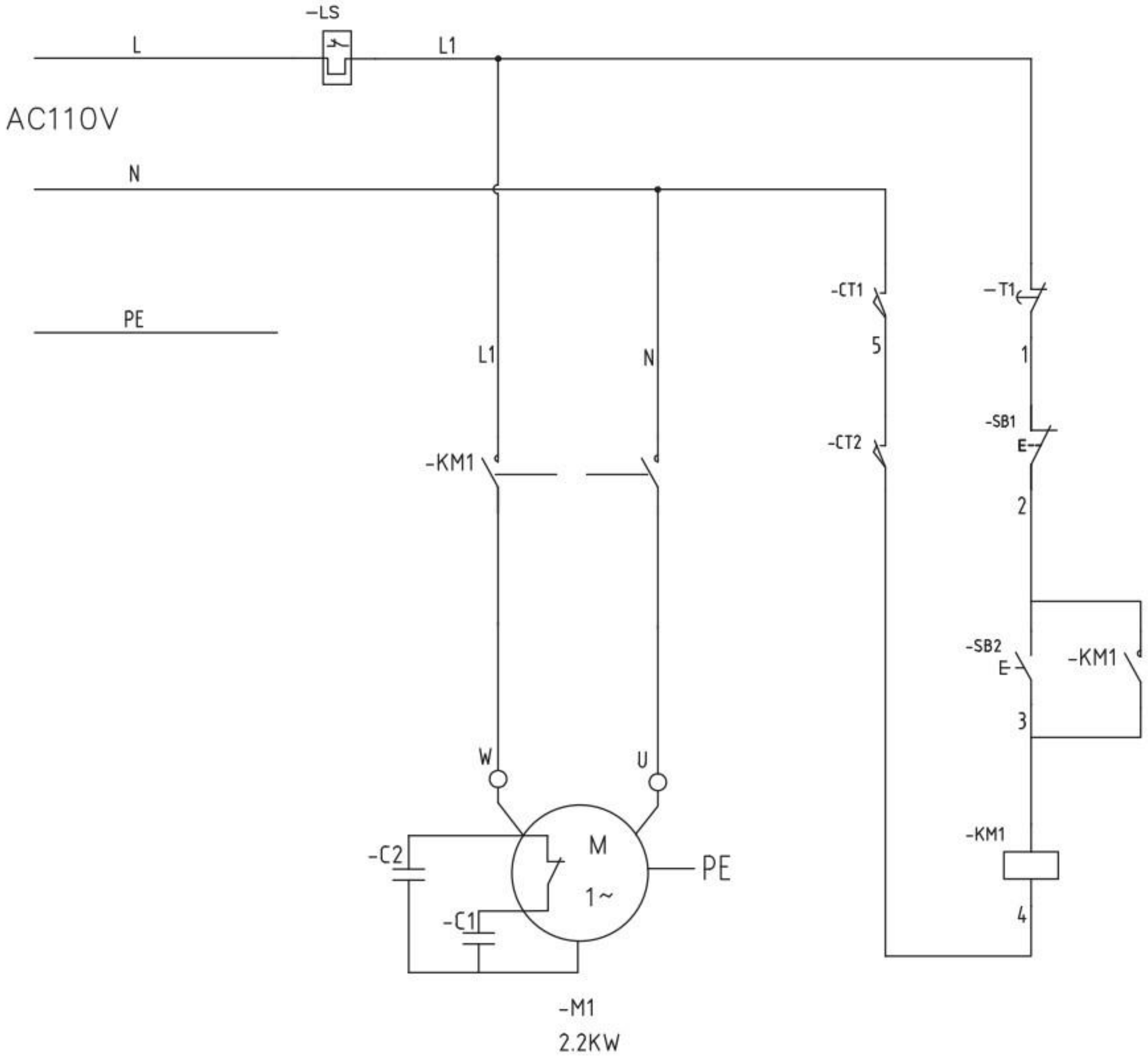
-LS
L
L1
AC110V
N
PE
L1
N
-KM1
-CT1
5
-CT2
-T1
1
-SB1
E
2
-SB2
E
3
-KM1
-KM1
4
W
U
-C2
-C1
M
1~
PE
-M1
2.2KW

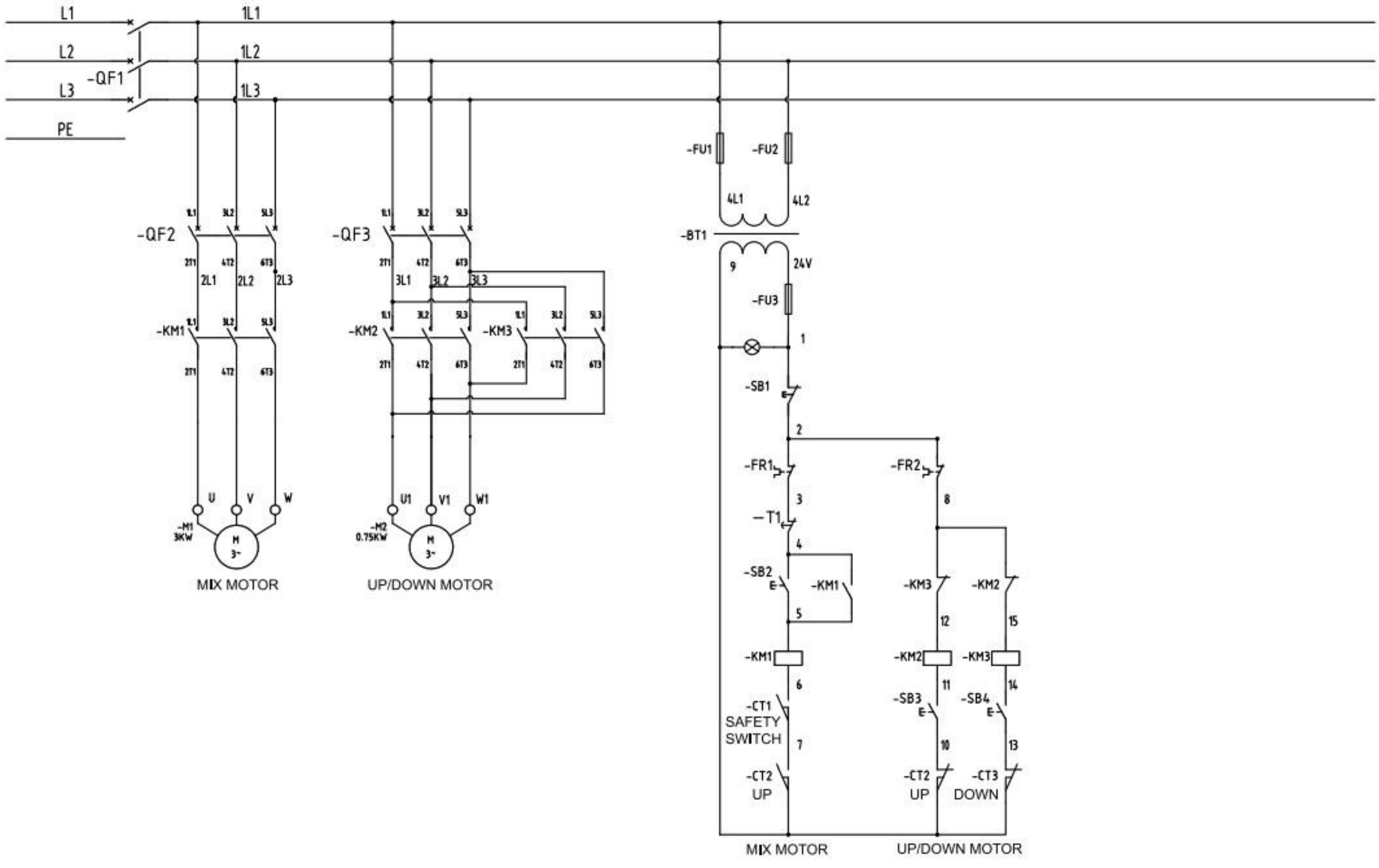
L1
L2
L3
PE
-QF1
1L1
1L2
1L3
-QF2
-QF3
2L1
2L2
2L3
3L1
3L2
3L3
-KM1
-KM2
-KM3
U
V
W
U1
V1
W1
-M1
3KW
-M2
0.75KW
M
3~
MIX MOTOR
UP/DOWN MOTOR
-FU1
-FU2
4L1
4L2
-BT1
9
24V
-FU3
1
-SB1
2
-FR1
-FR2
3
8
-T1
4
-SB2
-KM1
-KM3
-KM2
5
12
15
-KM1
-KM2
-KM3
6
11
14
-CT1
SAFETY
SWITCH
7
-SB3
-SB4
10
13
-CT2
UP
-CT2
UP
-CT3
DOWN
MIX MOTOR
UP/DOWN MOTOR