Parts Breakdown

Model PT-CN-0711-HC *50049*

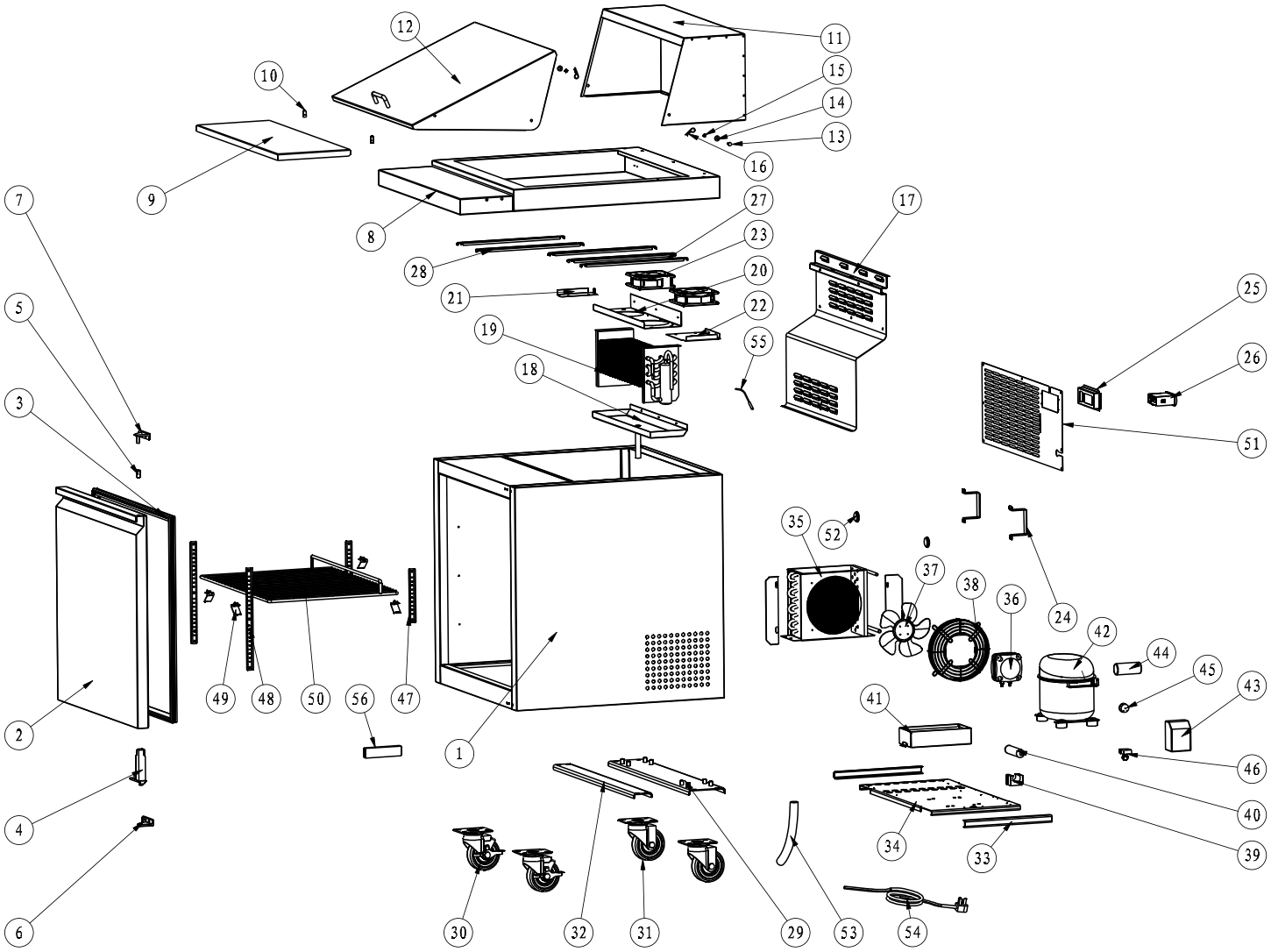

Parts Breakdown

Model PT-CN-0711-HC *50049*

Item No.	Description	Position
AF068	Cabinet for 50049	1
AF069	Door for 50049	2
AB250	Gasket for 50049	3
AA955	LEFT/RIGHT SPRING HINGE FOR CFD-1RR-HC	4
AA388	Axis Cover for 50049	5
AA360	Bottom Left Hinge for 50049	6
AF070	Upper Right Hinge for 50049	7
AF135	Top Board for 50049	8
AF136	Cutting Board for 50049	9
AB253	Fixer for Cutting Board for 50049	10
AF137	Back Cover for 50049	11
AF138	Lid for 50049	12
AB256	Dowel for 50049	13
AB257	Plastic Bolt for 50049	14
AB258	Nut for 50049	15
AB259	Split Pin for 50049	16
AF075	Evaporator Cover for 50049	17
AF076	Inner Drain Pan for 50049	18

Item No.	Description	Position
AA118	Evaporator for 50049	19
AF139	Fan Motor Installation Panel for 50049	20
AF078	Left Clapboard of Evaporator for 50049	21
AF079	Right Clapboard of Evaporator for 50049	22
AA128	Condenser Fan Motor for 50049	23
AF080	Stand Off Bracket for 50049	24
AB320	Thermostat Installation Board for 50049	25
AA123	Thermostat for 50049	26
AF140	Pan Bracket-15 for 50049	27
AF141	Pan Bracket-25 for 50049	28
AF083	Castor Support for 50049	29
26246	Caster with Brake for 50049	30
26247	Caster without Brake for 50049	31
AF084	Assembling Panel Support for 50049	32
AF085	Compressor Unit Track for 50049	33
AF086	Compressor Unit Installation Board for 50049	34
AB159	Condenser for 50049	35
AF030	Evaporator Fan Motor for 50049	36

Item No.	Description	Position
AA208	Condenser Fan Blade for 50049	37
AA207	Condenser Fan Motor Cover for 50049	38
AB595	Filter Fixer for 50049	39
AB594	Filter for 50049	40
AF087	Outer Drain Pan for 50049	41
AF088	Compressor for 50049	42
AF089	K Strip-2 Holes for 50049	47
AF090	K Strip-3 Holes for 50049	48
26884	K Clip for 50049	49
AB279	Shelf for 50049	50
AF091	Back Grill for 50049	51
AB169	Foaming Hole Cover for 50049	52
AA133	Drain Hose for 50049	53
AA135	Power Cord for 50049	54
AA379	Temperature Probe for 50049	55
AA596	Thermometer for 50049	56