Aurora Refrigeration

Models FR-CN-0737E-HC, 1372E-HC, RE-CN-0021E-HC
Items 59023, 59025, 59024

Instruction Manual

STOP
DO NOT RETURN
THIS PRODUCT TO THE STORE

For questions or assistance with this product call OMCAN Toll Free:
1 800 465 0234
Customer Service
or
visit the Support section of
www.omcan.com

Revised - 02/09/2023

Intertek Intertek

Toll Free: 1-800-465-0234
Fax: 905-607-0234
Email: service@omcan.com
www.omcan.com

MADE IN CHINA

Table of Contents

Model FR-CN-0737E-HC / Model FR-CN-1372E-HC / Model RE-CN-0021E-HC

Section **Page**

Disclaimer ---------- 3

General Information ---------- 4 - 5

Safety and Warranty ---------- 5 - 7

Technical Specifications ---------- 8

Installation ---------- 8 - 9

Maintenance ---------- 9 - 10

Troubleshooting ---------- 10 - 11

Parts Breakdown ---------- 12 - 17

Electrical Schematics ---------- 18 - 19

Notes ---------- 20 - 22

Warranty Registration ---------- 23

Disclaimer

OMCAN IS NOT RESPONSIBLE FOR ANY DAMAGES DUE TO WATER LEAKS. WARRANTY FOR WATER LEAKS IS VOID IF THE AMBIENT ROOM TEMPERATURE EXCEEDS 75°F AND 55% RELATIVE HUMIDITY, AND THE APPLIANCE DRAIN IS NOT CONNECTED DIRECTLY TO A FLOOR DRAIN.

OMCAN N'EST PAS RESPONSABLE DES DOMMAGES DUS AUX FUITES D'EAU. LA GARANTIE POUR LES FUITES D'EAU EST ANNULÉE SI LA TEMPÉRATURE AMBIANTE DE LA PIÈCE DÉPASSE 75°F ET 55% D'HUMIDITÉ RELATIVE, ET SI LE DRAIN DE L'APPAREIL N'EST PAS RACCORDÉ DIRECTEMENT À UN DRAIN DE PLANCHER.

OMCAN NO SE HACE RESPONSABLE DE LOS DAÑOS CAUSADOS POR FUGAS DE AGUA. LA GARANTÍA POR FUGAS DE AGUA QUEDA ANULADA SI LA TEMPERATURA AMBIENTE SUPERA LOS 75°F Y EL 55% DE HUMEDAD RELATIVA, Y EL DESAGÜE DEL APARATO NO ESTÁ CONECTADO DIRECTAMENTE A UN DESAGÜE DE PISO.

General Information

Omcan Manufacturing and Distributing Company Inc., Food Machinery of America, Inc. dba Omcan and Omcan Inc. are not responsible for any harm or injury caused due to any person's improper or negligent use of this equipment. The product shall only be operated by someone over the age of 18, of sound mind, and not under the influence of any drugs or alcohol, who has been trained in the correct operation of this machine, and is wearing authorized, proper safety clothing. Any modification to the machine voids any warranty, and may cause harm to individuals using the machine or in the vicinity of the machine while in operation.

CHECK PACKAGE UPON ARRIVAL

Upon receipt of an Omcan shipment please inspect for external damage. If no damage is evident on the external packaging, open carton to ensure all ordered items are within the box, and there is no concealed damage to the machine. If the package has suffered rough handling, bumps or damage (visible or concealed), please note it on the bill of lading before accepting the delivery and contact Omcan within 24 hours, so we may initiate a claim with the carrier. A detailed report on the extent of the damage caused to the machine must be filled out within three days, from the delivery date shown in the shipping documents. Omcan has no recourse for damaged products that were shipped collect or third party.

Before operating any equipment, always read and familiarize yourself with all operation and safety instructions.

Omcan would like to thank you for purchasing this machine. It's of the utmost importance to save these instructions for future reference. Also save the original box and packaging for shipping the equipment if servicing or returning of the machine is required.

Omcan Fabrication et distribution Companie Limité et Food Machinery d'Amerique, dba Omcan et Omcan Inc. ne sont pas responsables de tout dommage ou blessure causé du fait que toute personne ait utilisé cet équipement de façon irrégulière. Le produit ne doit être exploité que par quelqu'un de plus de 18 ans, saine d'esprit, et pas sous l'influence d'une drogue ou d'acohol, qui a été formé pour utiliser cette machine correctement, et est vêtu de vêtements de sécurité approprié. Toute modification de la machine annule toute garantie, et peut causer un préjudice à des personnes utilisant la machine ou des personnes à proximité de la machine pendant son fonctionnement.

VÉRIFIEZ LE COLIS DÈS RÉCEPTION

Dès réception d'une expédition d'Omcan veuillez inspecter pour dommages externes. Si aucun dommage n'est visible sur l'emballage externe, ouvrez le carton afin de s'assurer que tous les éléments commandés sont dans la boîte, et il n'y a aucun dommage dissimulé à la machine. Si le colis n'a subi aucune mauvaises manipulations, de bosses ou de dommages (visible ou cachée), notez-le sur le bond de livraison avant d'accepter la livraison et contactez Omcan dans les 24 heures qui suivent, pour que nous puissions engager une réclamation auprès du transporteur. Un rapport détaillé sur l'étendue des dommages causés à la machine doit être rempli dans un délai de trois jours, à compter de la date de livraison indiquée dans les documents d'expédition. Omcan n'a aucun droit de recours pour les produits endommagés qui ont été expédiées ou cueilli par un tiers transporteur.

General Information

Avant d'utiliser n'importe quel équipement, toujours lire et vous familiariser avec toutes les opérations et les consignes de sécurité.

Omcan voudrais vous remercier d'avoir choisi cette machine. Il est primordial de conserver ces instructions pour une référence ultérieure. Également conservez la boîte originale et l'emballage pour l'expédition de l'équipement si l'entretien ou le retour de la machine est nécessaire.

Omcan Empresa De Fabricacion Y Distribucion Inc. Y Maquinaria De Alimentos De America, Inc. dba Omcan y Omcan Inc. no son responsables de ningun daño o perjuicío causado por cualquier persona inadecuada o el uso descuidado de este equipo. El producto solo podra ser operado por una persona mayor de 18 años, en su sano juicio y no bajo alguna influencia de droga o alcohol, y que este ha sido entrenado en el correcto funcionamiento de esta máquina, y ésta usando ropa apropiada y autorizada. Cualquier modificación a la máquina anúla la garantía y puede causar daños a las personas usando la máquina mientras esta en el funcionamiento.

REVISE EL PAQUETE A SU LLEGADA

Tras la recepcion de un envio Omcan favor inspeccionar daños externos. Si no hay daños evidentes en el empaque exterior, Habra el carton para asegurararse que todos los articulos solicitados ésten dentro de la caja y no encuentre daños ocultos en la máquina. Si el paquete ha sufrido un manejo de poco cuidado, golpes o daños (visible o oculto) por favor anote en la factura antes de aceptar la entrega y contacte Omcan dentro de las 24 horas, de modo que podamos iniciar una reclamación con la compañia. Un informe detallado sobre los daños causados a la máquina debe ser llenado en el plazo de tres días, desde la fecha de entrega que se muestra en los documentos de envío. Omcan no tiene ningun recurso por productos dañados que se enviaron a recoger por terceros.

Antes de utilizar cualquier equipo, siempre lea y familiarizarse con todas las instrucciones de funcionamiento y seguridad.

Omcan le gustaría darle las gracias por la compra de esta máquina. Es de la mayor importancia para salvar estas instrucciones para futuras consultas. Además, guarda la caja original y el embalaje para el envío del equipo si servicio técnico o devolución de la máquina que se requiere.

Safety and Warranty

Please pay close attention to the safety notices in this section. Disregarding these notices may lead to serious injury and can damage the unit.

CAUTION FOR SAFETY

1. Leave enough space from the wall to the cabinet and the ceiling; do not place the back of the unit against the wall.

Safety and Warranty

Caution: keep a minimum of 20cm from the cabinet and the wall.

2. Please keep other objects away from the unit that may cause a fire.
3. Do not store flammable or combustible materials near the unit.
4. Only connect to a grounded single phase connection.
   Caution: Do not connect grounding wire to a water or gas pipe.
5. Handle with caution during transportation, the unit can only be leaned a maximum of 45°.
6. When encountering problems, please refer to the Troubleshooting section or call Omcan.

Danger: Flammable refrigerant used. Do not use mechanical devices to defrost the unit. Do not puncture the refrigerant tubing. To be repaired only by trained service technicians.

Caution: Flammable refrigerant used. Consult repair manual/owners guide before attempting to service this unit. All safety precautions must be followed.

Caution: Dispose of properly in accordance with federal or local regulations. Flammable refrigerant used.

Caution: Follow handling instructions carefully.

Caution: Ensure all ventilation openings are unobstructed.

Caution: Servicing shall be done by authorized service personnel, so as to minimize the risk of injury due to incorrect parts or improper service.

ATTENTION

- To minimize shock and fire hazards, be sure not to overload outlet. Please designate one outlet for your unit.
- Do not use extension cords.
- Do not put your hands under the unit when the unit is required to be moved.
- When the unit is not in use for a long period of time, please unplug the unit from the outlet.
- After unplugging the unit, wait at least 10 minutes before re-plugging it. Failure to do so could cause damage to the compressor.

UNPLUG CORD

- To minimize shock and fire hazards, please do not plug or unplug the cord with wet hands.
- During maintenance and cleaning, please unplug the unit..

PROPER GROUNDING REQUIRED

- To minimize shock and fire hazards, make sure that the unit is properly grounded.

PROHIBITION

- Do not attempt to remove or repair any component unless instructed by Omcan.
- Make sure that the unit is not resting on or against the electrical cord and plug.
- To minimize personal injury, do not hang on the doors.
- Do not store any flammable or explosive material inside the unit.

- Do not attempt to alter or tamper with the electrical cord.

RESIDENTIAL USERS: Vendor assumes no liability for parts or labor coverage for component failure or other damages resulting from installation in non-commercial or residential applications. The right is reserved to deny shipment for residential usage; if this occurs, you will be notified as soon as possible.

1 YEAR PARTS AND LABOUR WARRANTY

Within the warranty period, contact Omcan Inc. at 1-800-465-0234 to schedule an Omcan authorized service technician to repair the equipment locally.

Unauthorized maintenance will void the warranty. Warranty covers electrical and part failures, not improper use.

Please see https://omcan.com/disclaimer for complete info.

WARNING:

The packaging components are classified as normal solid urban waste and can therefore be disposed of without difficulty.

In any case, for suitable recycling, we suggest disposing of the products separately (differentiated waste) according to the current norms.

DO NOT DISCARD ANY PACKAGING MATERIALS IN THE ENVIRONMENT!

Technical Specifications

Model	FR-CN-0737E-HC	FR-CN-1372E-HC	RE-CN-0021E-HC
Temperature Range	-22.2 to -17.8°C / -8 to 0°F		0.5 to 4.4°C / 33 to 40°F
Max Ambient Temp Rating	24°C / 75°F		
Power	456 W	780 W	348 W
Refrigerant	R290		
Isolation Material	Cyclopentane		
Cooling System	Ventilated		
Defrosting	Automatic		
Type of Controller	Digital		
Self-Closing Door	Yes		
Current	4.9A	8.5A	3.6A
Number of Doors	1	2	1
Number of Shelves	3	6	3
Shelf Material	Plastic Coated		
Shelf Loading Capacity	88 lbs. / 39.9 kgs		
Electrical	110-120V / 60Hz / 1		
Interior Dimensions	24.4” x 27.1” x 53.5” 620 x 688 x 1360mm	49.4” x 27.1” x 53.5” 1255 x 688 x 1360mm	24.4” x 27.1” x 53.5” 620 x 688 x 1360mm
Overall Dimensions	29” x 32.2” x 82.5” 736 x 818 x 2095mm	54” x 32.2” x 82.5” 1371 x 818 x 2095mm	29” x 32.2” x 82.5” 736 x 818 x 2095mm
Packaging Dimensions	30.3” x 34.1” x 84.4” 770 x 865 x 2145mm	56.5” x 34.6” x 85” 1435 x 880 x 2160mm	30.3” x 34.1” x 84.4” 770 x 865 x 2145mm
Net Volume	583 L / 20.6 cu.ft.	1169 L / 41.3 cu.ft.	583 L / 20.6 cu.ft.
Weight	282.2 lbs. / 128 kgs.	447.5 lbs. / 203 kgs.	282.2 lbs. / 128 kgs.
Packaging Weight	321.9 lbs. / 146 kgs.	531.3 lbs. / 241 kgs.	321.9 lbs. / 146 kgs.
Item Number	59023	59025	59024

Installation

IMPORTANT!!! PLEASE READ BEFORE INSTALLATION

- If the unit has recently been transported, please let the unit stand upright for a minimum of 24 hours before plugging it in.
- Make sure that the unit drops down to the desired temperature before loading the unit with product.
- Make sure that there is proper ventilation around the unit in the area where it will operate.
- Make sure all accessories are installed (shelves, casters, ect.) before plugging in the unit.

Installation

- Please read through the manual in its entirety.

CABINET LOCATION GUIDELINES

INSTALL THE UNIT ON A STRONG AND LEVELED SURFACE

- Unit may make unpleasant noises if surface is uneven.
- Unit may malfunction if surface is uneven.

INSTALL THE UNIT IN AN INDOOR, WELL VENTILATED AREA

- Unit performs more efficiently in a well ventilated area.
- For best performance, please maintain a clearance of 4” from the back of the unit.
- Not to be used outdoors.

AVOID INSTALLATION IN A HIGH HUMIDITY AND/OR DUSTY AREA

- Humidity can cause the unit to rust and decrease efficiency of the unit.
- Dust collected on the condenser coil will cause the unit to malfunction. Clean the condenser at least once a month with a brush or clean cloth.

SELECT A LOCATION AWAY FROM HEAT AND MOISTURE-GENERATING EQUIPMENT

- High ambient temperatures will cause the compressor to overwork, leading to higher energy bills and gradual breakdown of the unit.

ELECTRICAL

Please ensure that the required voltage of the compressor is being supplied at all times. Low or high voltage can detrimentally affect the refrigeration unit. All units should be plugged into a grounded a properly-sized electrical outlet with appropriate overcurrent protection. Please refer to the electrical requirements on the rating plate. Please make sure that your unit has its own dedicated outlet. Do not use an extension cord.

Maintenance

CLEANING THE CONDENSER COIL

- For efficient operation, it is important that the condenser surface be kept free of dust, dirt and lint.
- We recommend cleaning the condenser coil and fins at least once per month.
- Clean with a commercial condenser coil cleaner. Brush the condenser fins from top to bottom, not side to side.
- After cleaning, straighten any bent condenser fins with a fin comb.

CLEANING THE FAN BLADES AND MOTOR

If necessary, clean the fan blades and motor with a soft cloth. If it is necessary to wash the fan blades, cover

Maintenance

the fan motor to prevent moisture damage.

CLEANING THE INTERIOR OF THE UNIT

- When cleaning the cabinet interior, us a solvent of warm water and mild soap.
- Do not use steel wool, caustic soap, abrasive cleaners, or bleach that may damage the stainless steel surface.
- Wash door gaskets on a regular basis, preferably weekly. Simply remove door gasket from the frame of the door, soak in warm water and soap for thirty (30) minutes, dry with a soft cloth and replace.
- Check door gaskets for proper seal after they are replaced.
- Periodically remove the shelves and pilasters from the unit and clean them with mild soap and warm water. To remove the pilasters, first remove the shelves and shelf brackets. Then, simply lift the pilaster up and out.

Warning: Disconnect power cord before cleaning any parts of the unit.

Troubleshooting

Problem	Possible Cause	Solution
Compressor not running.	Fuse blown or circuit breaker tripped.	Replace fuse or reset circuit breaker.
	Power cord unplugged.	Plug in power cord.
	Thermostat set too high.	Set thermostat to a lower temperature.
	Cabinet in defrost cycle.	Wait for defrost cycle to finish.
Condensing unit runs for long periods of time.	Excessive amount of warm product placed in cabinet.	Allow adequate time for product to cool down.
	Prolonged door opening or door ajar.	Ensure doors are closed when not in use. Avoid opening doors for long periods of time.
	Door gaskets not sealing properly.	Ensure gaskets are snapped in completely. Remove gaskets and wash with soap and water. Check condition of gaskets and replace if necessary.
	Dirty condenser coil.	Clean the condenser coil.
	Evaporator coil iced over.	Unplug unit and allow coil to defrost. Make sure thermostat is not set too cold. Ensure that the door gaskets are sealing properly.

Troubleshooting

Cabinet temperature is too warm.	Thermostat set too warm.	Set thermostat to a lower temperature.
	Blocking air flow.	Re-arrange product to allow for proper air flow. Make sure there is at least 4” of clearance from evaporator.
	Excessive amount of warm product placed in cabinet.	Allow adequate time for product to cool down.
	Fuse blown or circuit breaker tripped.	Replace fuse or reset circuit breaker.
	Dirty condenser coil.	Clean the condenser coil.
	Prolonged door opening or door ajar.	Ensure doors are closed when not in use. Avoid opening doors for long periods of time.
	Evaporator coil iced over.	
Cabinet is noisy.	Loose parts.	Locate and tighten the loose parts.
	Tubing vibration.	Ensure tubing is free from contact with other tubing or components.

Parts Breakdown

Model FR-CN-0737E-HC *59023*

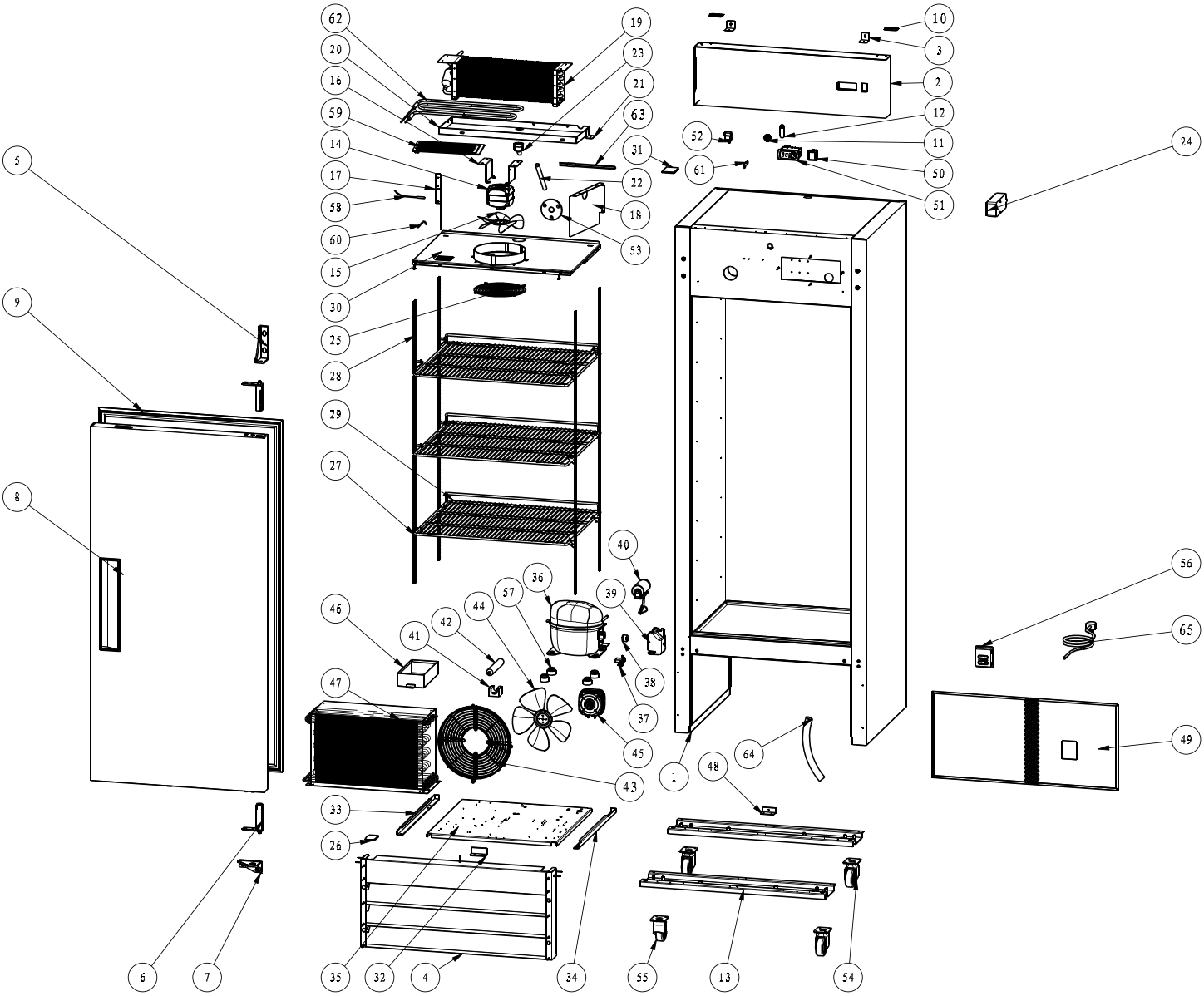

Parts Breakdown

Model FR-CN-0737E-HC *59023*

Item No.	Description	Position
AF024	Cabinet for 59023	1
AI316	Control Panel for 59023	2
AF026	Control Panel Fixer for 59023	3
AF027	Front Grill for 59023	4
AA954	Upper Right Hinge Holder for 59023	5
AA955	Left/Right Spring Hinge for 59023	6
AA956	Bottom Right Hinge Holder for 59023	7
AI317	Door for 59023	8
AA958	Gasket for 59023	9
AA959	Hinge for 59023	10
AA197	Lock for 59023	11, 61
AF028	Lock Bolt for 59023	12
AF029	Leg Supporter for 59023	13
AF825	Evaporator Fan Motor for 59023	14
AA962	Blade of Evaporator Fan Motor for 59023	15
AF031	Evaporator Fan Motor Holder for 59023	16
AF032	Right Air Guide Sheet for 59023	17
AF033	Left Air Guide Sheet for 59023	18
AI318	Evaporator for 59023	19
AF034	Inner Drain Pan for 59023	20

Item No.	Description	Position
AF035	Inner Drain Pan Fixer for 59023	21
AA969	Drain Hose for 59023	22
69703	Elbow Pipe for 59023	23
AA970	Light Components for 59023	24
AF037	Evap Fan Motor Cover for 59023	25
AA972	Bottom Cover for Reversible Door for 59023	26, 31
26884	K Clip for 59023	27
AA809	K Strip for 59023	28
AA975	Shelf for 59023	29
AF038	Evaporator Cover for 59023	30
AF039	Limited Block of Installation Board for 59023	32
AF040	Left Track for Assembling Panel for 59023	33
AF041	Right Track for Assembling Panel for 59023	34
AF042	Compressor Unit Installation Board for 59023	35
AI319	Compressor for 59023	36
AI320	Compressor Starting Components for 59023	37-40, 57
AB595	Filter Fixer for 59023	41
AB594	Filter for 59023	42
AA249	Condenser Fan Motor Cover for 59023	43
AA764	Condenser/Evaporator Fan Motor Blade for 59023	44

Item No.	Description	Position
AI321	Condenser Fan Motor for 59023	45
AB959	Outer Drain Pan for 59023	46
AF055	Condenser for 59023	47
AF045	Back Grill Fixer for 59023	48
AA989	Back Grill for 59023	49
AA124	Power Switch for 59023	50
AI322	Thermostat for 59023	51
AB977	Door Switch for 59023	52
AF046	Drain Plug for 59023	53
26247	Caster without Brake for 59023	54
26246	Caster with Brake for 59023	55
AA993	Power Plug Fitting Base for 59023	56
AA379	Temperature Probe for 59023	58
AA864	Drain Pan Heater for 59023	59
AB084	Evaporator Temperature Sensor for 59023	60
AA865	Defrost Heater for 59023	62
AA867	Drain Hose Heater for 59023	63
AA216	Drain Tube for 59023	64
AA135	Power Cord for 59023	65

Parts Breakdown

Model FR-CN-1372E-HC *59025*

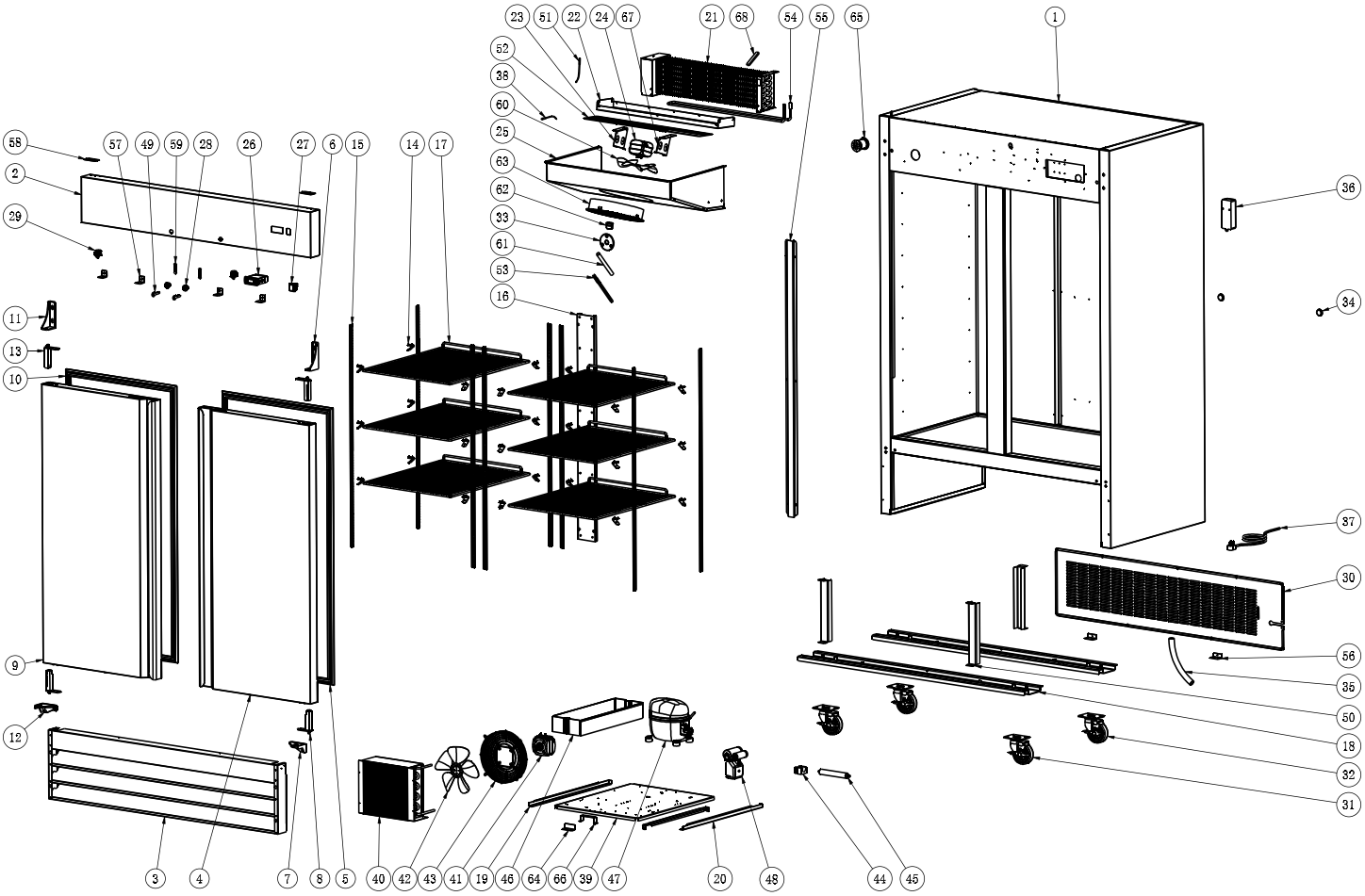

Parts Breakdown

Model FR-CN-1372E-HC *59025*

Item No.	Description	Position
AJ133	Cabinet for 59025	1
AJ134	Control Panel for 59025	2
AF048	Front Grill for 59025	3
AJ135	Right Door for 59025	4
AB029	Gasket for 59025	5, 10
AA954	Upper Right Hinge Holder for 59025	6
AA956	Bottom Right Hinge Holder for 59025	7
AA955	Left/Right Spring Hinge for 59025	8, 13
AJ136	Left Door for 59025	9
AB032	Upper Left Hinge Holder for 59025	11
AB033	Bottom Left Hinge Holder for 59025	12
AG442	K Clip for 59025	14
AG443	K Strip for 59025	15
AG550	Back Brackets for 59025	16
AA975	Shelf for 59025	17
61471	Leg Supporter for 59025	18
AF040	Left Track for Assembling Panel for 59025	19
AF041	Right Track for Assembling Panel for 59025	20
AJ157	Evaporator for 59025	21
AG552	Inner Drain Pan for 59025	22
AG447	Left Evaporator Fan Motor Holder for 59025	23
AG448	Evaporator Fan Motor for 59025	24

Item No.	Description	Position
AG553	Evaporator Cover for 59025	25
27186	Carel Controller IR33 for 59025	26
AA124	Power Switch for 59025	27
AA197	Lock for 59025	28, 49
AB977	Door Switch for 59025	29
AG554	Back Grill for 59025	30
26246	Caster with Brake for 59025	31
26247	Caster without Brake for 59025	32
AG451	Drain Plug for 59025	33
AB169	Foaming Hole Cover for 59025	34
AA216	Drain Tube for 59025	35
AJ132	Light Components for 59025	36
AA805	Power Cord for 59025	37
AG455	Temperature Sensor of Cabinet Inside for 59025	38
AG452	Compressor Unit Installation Board for 59025	39
AH690	Condenser for 59025	40
AM510	Condenser Fan Motor for 59025	41
AA814	Condenser Fan Motor Blade for 59025	42
AB077	Condenser Fan Cover for 59025	43
AB595	Filter Fixer for 59025	44
AB594	Filter D25x160-B for 59025	45
AB970	Outer Drain Pan for 59025	46

Item No.	Description	Position
AM511	Compressor for 59025	47
AG558	Cabinet Supporter for 59025	50
AJ151	Evaporator Temperature Sensor for 59025	51
AB376	Thermostat for 59025	52
AM512	Drain Hose Heater for 59025	53
AJ162	Defrost Heater for 59025	54
AG462	Baffle of Suction Line for 59025	55
AG463	Back Grill Fixer for 59025	56
AG464	Control Panel Fixer for 59025	57
AA959	Hinge for 59025	58
AG465	Lock Bolt for 59025	59
AA764	Condenser/Evaporator Fan Motor Blade for 59025	60
AA969	Drain Hose for 59025	61
AG466	Elbow Pipe for 59025	62
AG467	Evaporator Fan Motor Cover for 59025	63
AG468	Limited Block of Installation Board for 59025	64
AJ155	Decompression Valve for 59025	65
AG469	Compressor Unit Handle for 59025	66
AG471	Right Evaporator Fan Motor Holder for 59025	67
AJ156	Fuse for 59025	68

Parts Breakdown

Model RE-CN-0021E-HC *59024*

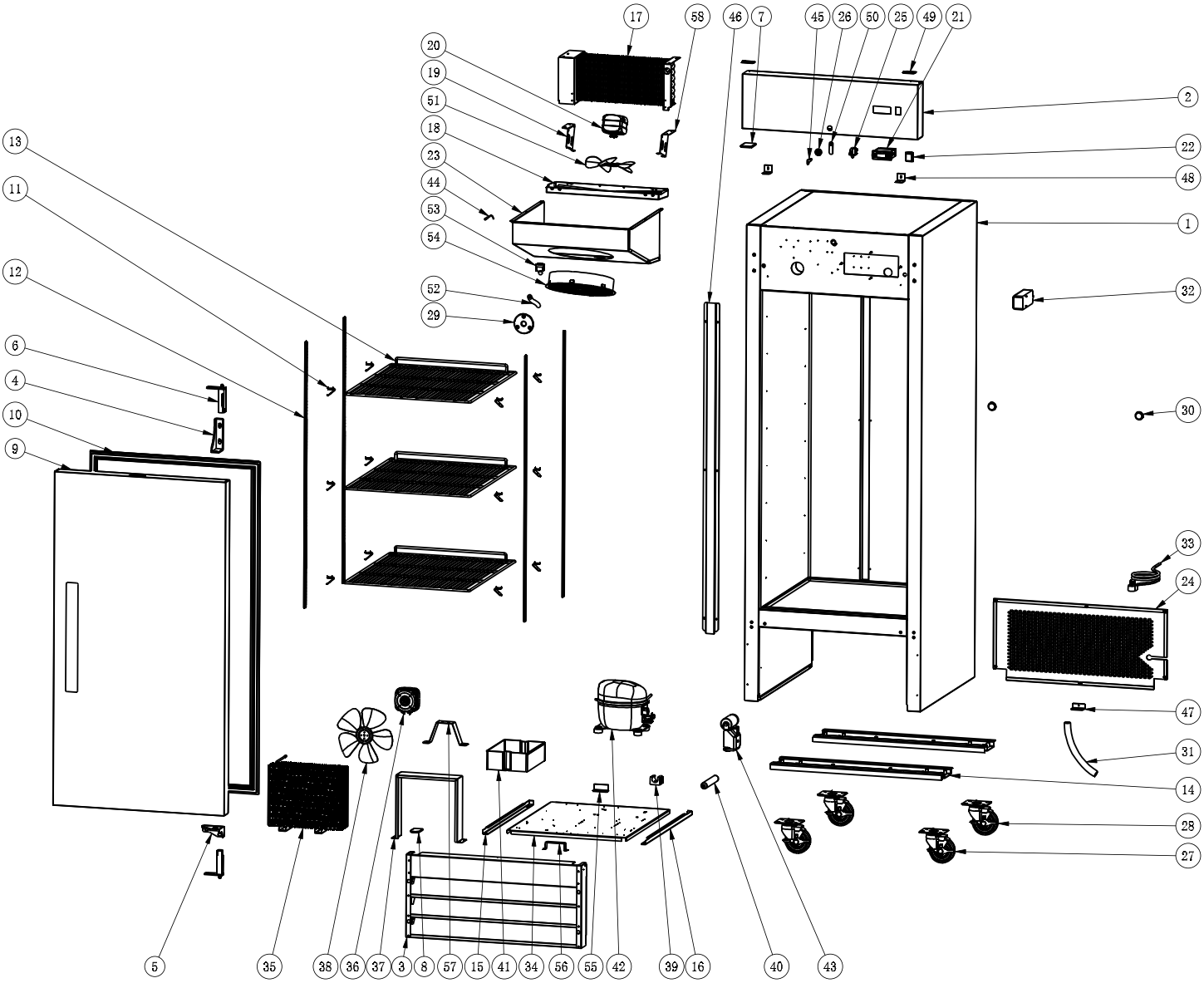

Parts Breakdown

Model RE-CN-0021E-HC *59024*

Item No.	Description	Position
AJ129	Cabinet for 59024	1
AJ130	Control Panel for 59024	2
AF027	Front Grill for 59024	3
AA954	Upper Right Hinge Holder for 59024	4
AA956	Bottom Right Hinge Holder for 59024	5
AA955	Left/Right Spring Hinge for 59024	6
AA972	Bottom Cover for Reversible Door for 59024	7, 8
AJ131	Door for 59024	9
AA958	Gasket for 59024	10
AG442	K Clip for 59024	11
AG443	K Strip for 59024	12
AA975	Shelf for 59024	13
AF029	Leg Supporter for 59024	14
AF040	Left Track for Assembling Panel for 59024	15
AF041	Right Track for Assembling Panel for 59024	16
AG445	Evaporator for 59024	17
AG446	Inner Drain Pan for 59024	18
AG447	Left Evaporator Fan Motor Holder for 59024	19

Item No.	Description	Position
AG448	Evaporator Fan Motor for 59024	20, 36
AB109	Thermostat for 59024	21
AA124	Power Switch for 59024	22
AG449	Evaporator Cover for 59024	23
AG450	Back Grill for 59024	24
AB977	Door Switch for 59024	25
AA197	Lock for 59024	26, 45
26246	Caster with Brake for 59024	27
26247	Caster without Brake for 59024	28
AG451	Drain Plug for 59024	29
AB169	Foaming Hole Cover for 59024	30
AA216	Drain Tube for 59024	31
AJ132	Light Components for 59024	32
AA805	Power Cord for 59024	33
AG452	Compressor Unit Installation Board for 59024	34
AA986	Condenser for 59024	35
AG453	Air Guide Sheet for 59024	37
AA764	Condenser/Evaporator Fan Motor Blade for 59024	38, 51

Item No.	Description	Position
AB595	Filter Fixer for 59024	39
AB594	Filter D25x160-B for 59024	40
AA874	Outer Drain Pan for 59024	41
AI386	Compressor for 59024	42
AI392	Compressor Starting Components for 59024	43
AG455	Temperature Sensor of Cabinet Inside for 59024	44
AG462	Baffle of Suction Line for 59024	46
AG463	Back Grill Fixer for 59024	47
AG464	Control Panel Fixer for 59024	48
AA959	Hinge for 59024	49
AG465	Lock Bolt for 59024	50
AA969	Drain Hose for 59024	52
AG466	Elbow Pipe for 59024	53
AG467	Evaporator Fan Motor Cover for 59024	54
AG468	Limited Block of Installation Board for 59024	55
AG469	Compressor Unit Handle for 59024	56
AG470	Condenser Fan Motor Holder for 59024	57
AG471	Right Evaporator Fan Motor Holder for 59024	58

Electrical Schematics

Model FR-CN-0737E-HC *59023*
Model RE-CN-0021E-HC *59024*

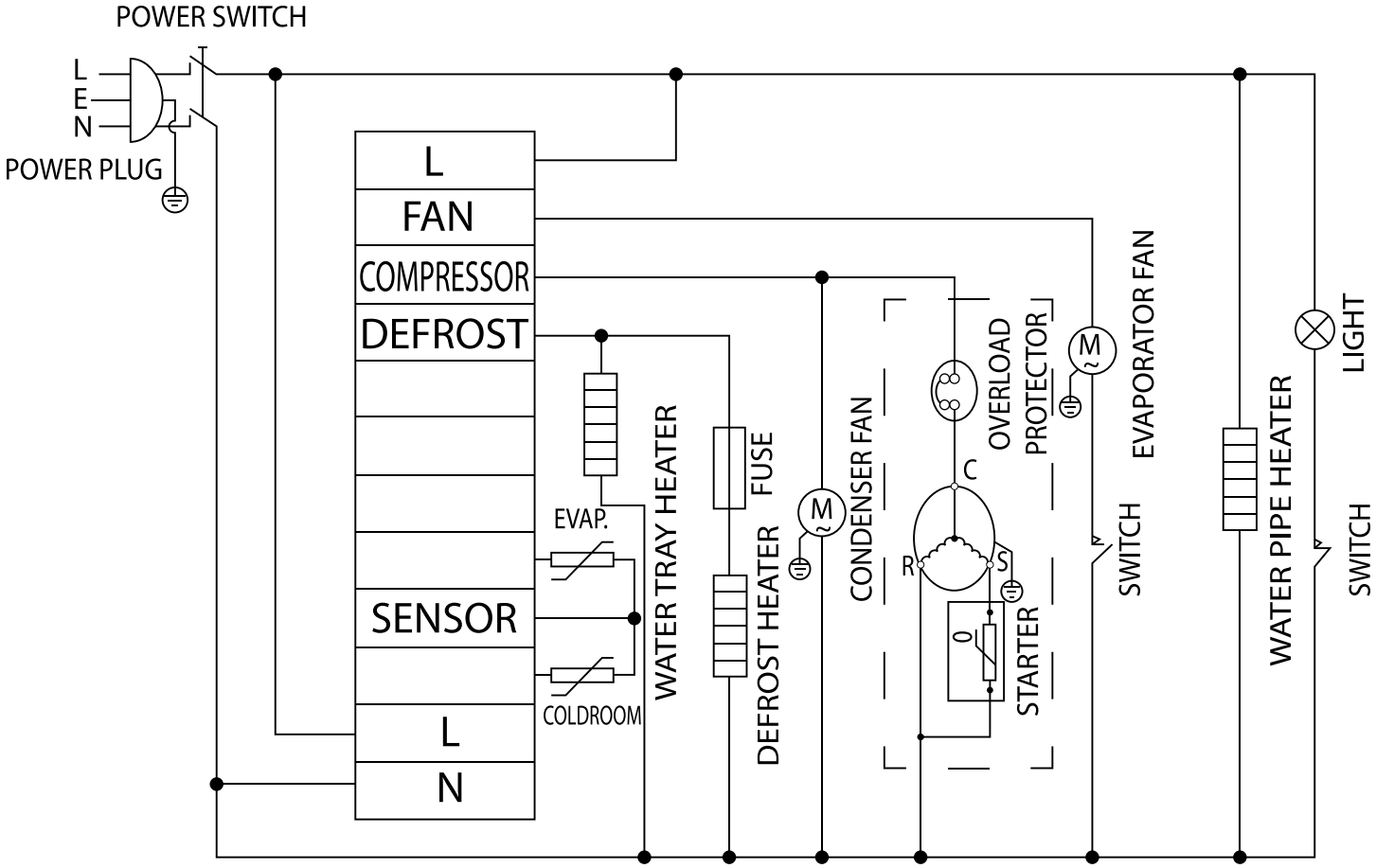

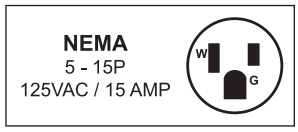

Electrical Schematics

Model FR-CN-1372E-HC 59025

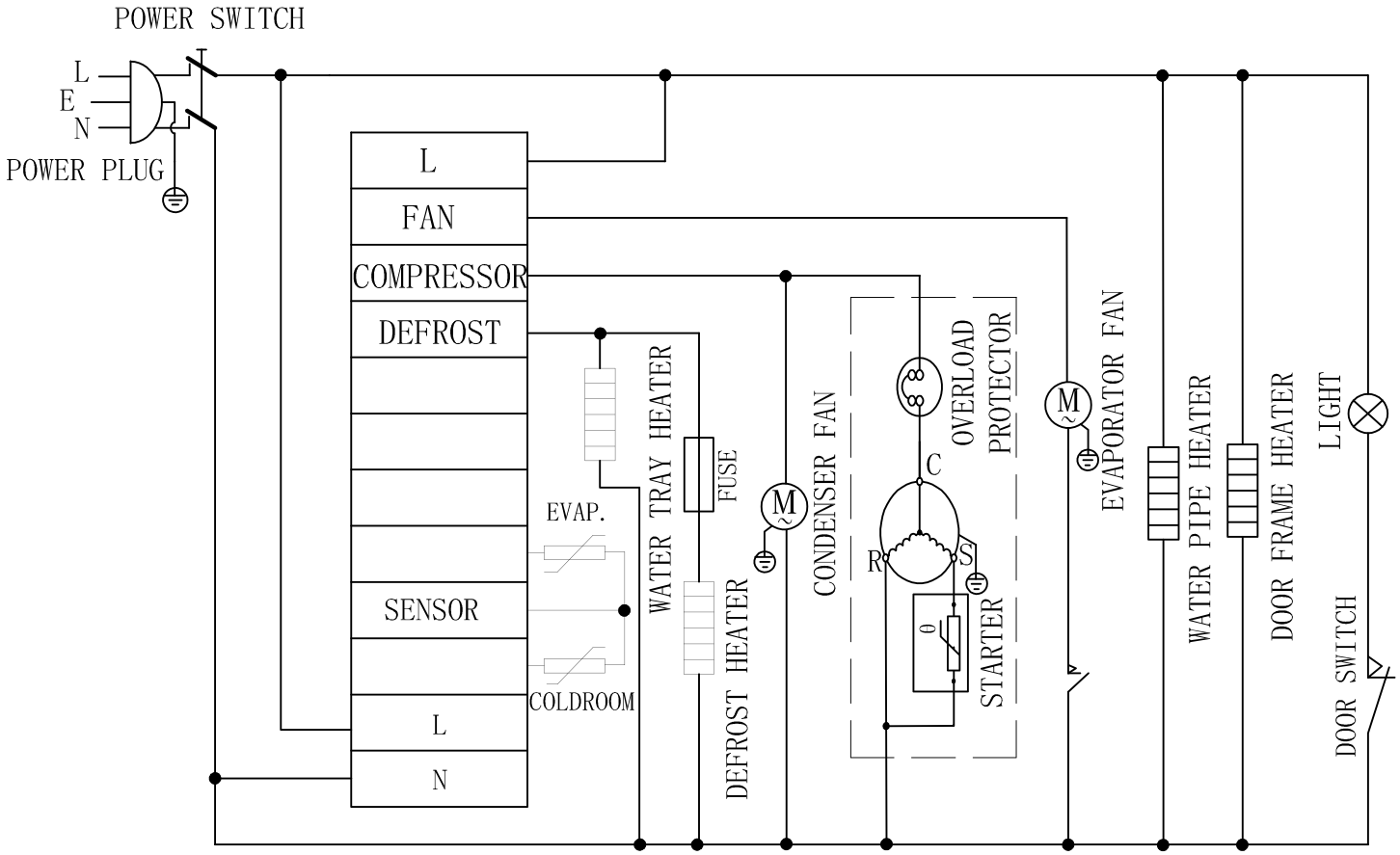

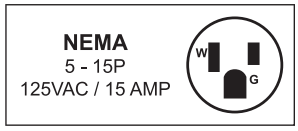

Notes

Notes

Notes

Warranty Registration

Thank you for purchasing an Omcan product. To register your warranty for this product, complete the information below, tear off the card at the perforation and then send to the address specified below. You can also register online by visiting:

Merci d'avoir acheté un produit Omcan. Pour enregistrer votre garantie pour ce produit, complétez les informations ci-dessous, détachez la carte au niveau de la perforation, puis l'envoyer à l'adresse spécifié ci-dessous. Vous pouvez également vous inscrire en ligne en visitant:

Gracias por comprar un producto Omcan usted. Para registrar su garantía para este producto, complete la información a continuación, cortar la tarjeta en la perforación y luego enviarlo a la dirección indicada a continuación. También puede registrarse en línea en:

https://omcan.com/warranty-registration/

For mailing in Canada

Pour postale au Canada

Por correo en Canadá

OMCAN
PRODUCT WARRANTY REGISTRATION
3115 Pepper Mill Court,
Mississauga, Ontario
Canada, L5L 4X5

For mailing in the US

Pour diffusion aux États-Unis

Por correo en los EE.UU.

OMCAN
PRODUCT WARRANTY REGISTRATION
4450 Witmer Industrial Estates, Unit 4,
Niagara Falls, New York
USA, 14305

or email to: service@omcan.com

Purchaser's Information

Name: _____

Address: _____

City: _____ Province or State: _____ Postal or Zip: _____

Country: _____

Dealer from which Purchased: _____

Dealer City: _____ Dealer Province or State: _____

Invoice: _____

Company Name: _____

Telephone: _____

Email Address: _____

Type of Company:

☐ Restaurant ☐ Bakery ☐ Deli

☐ Butcher ☐ Supermarket ☐ Caterer

☐ Institution *(specify)*: _____

☐ Other *(specify)*: _____

Model Name: _____ Model Number: _____ Serial Number: _____

Machine Description: _____

Date of Purchase (MM/DD/YYYY): _____ Date of Installation (MM/DD/YYYY): _____

Would you like to extend the warranty? ☐ Yes ☐ No

Thank you for choosing Omcan | Merci d'avoir choisi Omcan | Gracias por elegir Omcan

Since 1951 Omcan has grown to become a leading distributor of equipment and supplies to the North American food service industry. Our success over these many years can be attributed to our commitment to strengthen and develop new and existing relationships with our valued customers and manufacturers. Today with partners in North America, Europe, Asia and South America, we continually work to improve and grow the company. We strive to offer customers exceptional value through our qualified local sales and service representatives who provide convenient access to over 6,500 globally sourced products.

Depuis 1951 Omcan a grandi pour devenir un des “leaders” de la distribution des équipements et matériel pour l’industrie des services alimentaires en Amérique du Nord. Notre succès au cours de ces nombreuses années peut être attribué à notre engagement à renforcer et à développer de nouvelles et existantes relations avec nos clients et les fabricants de valeur. Aujourd’hui avec des partenaires en Amérique du Nord, Europe, Asie et Amérique du Sud, nous travaillons continuellement à améliorer et développer l’entreprise. Nous nous efforçons d’offrir à nos clients une valeur exceptionnelle grâce à nos ventes locales qualifiées et des représentants de service qui offrent un accès facile à plus de 6500 produits provenant du monde entier.

Desde 1951 Omcan ha crecido hasta convertirse en un líder en la distribución de equipos y suministros de alimentos en América del Norte industria de servicios. Nuestro éxito en estos años se puede atribuir a nuestro compromiso de fortalecer y desarrollar nuevas relaciones existentes con nuestros valiosos clientes y fabricantes. Hoy con socios de América del Norte, Europa, Asia y América del Sur, que trabajan continuamente para mejorar y crecer la empresa. Nos esforzamos por ofrecer a nuestros clientes valor excepcional a través de nuestro local de ventas y representantes de los servicios que proporcionan un fácil acceso a más de 6,500 productos con origen a nivel mundial.