Refrigerated Showcases

Models RS-CN-0120-5, 0160-5, 0202-5
Items 47107, 47278, 47279

Instruction Manual

STOP

DO NOT RETURN THIS PRODUCT TO THE STORE

For questions or assistance with this product call OMCAN Toll Free:
1 800 465 0234
Customer Service
or
visit the Support section of
www.omcan.com

Revised - 08/19/2022

Intertek Intertek

Toll Free: 1-800-465-0234
Fax: 905-607-0234
Email: service@omcan.com
www.omcan.com

MADE IN CHINA

NEMA
5 - 15
125 VAC / 15 AMP
RECEPTACLE

Table of Contents

Model RS-CN-0120-5 / Model RS-CN-0160-5 / Model RS-CN-0202-5

Section	Page
Disclaimer	3
General Information	4 - 5
Safety and Warranty	5 - 7
Technical Specifications	8
Operation	8 - 10
Maintenance	10
Troubleshooting	11
Parts Breakdown	12 - 17
Electrical Schematics	18
Warranty Registration	19

Disclaimer

OMCAN IS NOT RESPONSIBLE FOR ANY DAMAGES DUE TO WATER LEAKS. WARRANTY FOR WATER LEAKS IS VOID IF THE AMBIENT ROOM TEMPERATURE EXCEEDS 75°F AND 55% RELATIVE HUMIDITY, AND THE APPLIANCE DRAIN IS NOT CONNECTED DIRECTLY TO A FLOOR DRAIN.

General Information

Omcan Manufacturing and Distributing Company Inc., Food Machinery of America, Inc. dba Omcan and Omcan Inc. are not responsible for any harm or injury caused due to any person's improper or negligent use of this equipment. The product shall only be operated by someone over the age of 18, of sound mind, and not under the influence of any drugs or alcohol, who has been trained in the correct operation of this machine, and is wearing authorized, proper safety clothing. Any modification to the machine voids any warranty, and may cause harm to individuals using the machine or in the vicinity of the machine while in operation.

CHECK PACKAGE UPON ARRIVAL

Upon receipt of an Omcan shipment please inspect for external damage. If no damage is evident on the external packaging, open carton to ensure all ordered items are within the box, and there is no concealed damage to the machine. If the package has suffered rough handling, bumps or damage (visible or concealed), please note it on the bill of lading before accepting the delivery and contact Omcan within 24 hours, so we may initiate a claim with the carrier. A detailed report on the extent of the damage caused to the machine must be filled out within three days, from the delivery date shown in the shipping documents. Omcan has no recourse for damaged products that were shipped collect or third party.

Before operating any equipment, always read and familiarize yourself with all operation and safety instructions.

Omcan would like to thank you for purchasing this machine. It's of the utmost importance to save these instructions for future reference. Also save the original box and packaging for shipping the equipment if servicing or returning of the machine is required.

Omcan Fabrication et distribution Companie Limité et Food Machinery d'Amerique, dba Omcan et Omcan Inc. ne sont pas responsables de tout dommage ou blessure causé du fait que toute personne ait utilisé cet équipement de façon irrégulière. Le produit ne doit être exploité que par quelqu'un de plus de 18 ans, saine d'esprit, et pas sous l'influence d'une drogue ou d'acohol, qui a été formé pour utiliser cette machine correctement, et est vêtu de vêtements de sécurité approprié. Toute modification de la machine annule toute garantie, et peut causer un préjudice à des personnes utilisant la machine ou des personnes à proximité de la machine pendant son fonctionnement.

VÉRIFIEZ LE COLIS DÈS RÉCEPTION

Dès réception d'une expédition d'Omcan veuillez inspecter pour dommages externes. Si aucun dommage n'est visible sur l'emballage externe, ouvrez le carton afin de s'assurer que tous les éléments commandés sont dans la boîte, et il n'y a aucun dommage dissimulé à la machine. Si le colis n'a subi aucune mauvaises manipulations, de bosses ou de dommages (visible ou cachée), notez-le sur le bond de livraison avant d'accepter la livraison et contactez Omcan dans les 24 heures qui suivent, pour que nous puissions engager une réclamation auprès du transporteur. Un rapport détaillé sur l'étendue des dommages causés à la machine doit être rempli dans un délai de trois jours, à compter de la date de livraison indiquée dans les documents d'expédition. Omcan n'a aucun droit de recours pour les produits endommagés qui ont été expédiées ou cueilli par un tiers transporteur.

General Information

Avant d'utiliser n'importe quel équipement, toujours lire et vous familiariser avec toutes les opérations et les consignes de sécurité.

Omcan voudrais vous remercier d'avoir choisi cette machine. Il est primordial de conserver ces instructions pour une référence ultérieure. Également conservez la boîte originale et l'emballage pour l'expédition de l'équipement si l'entretien ou le retour de la machine est nécessaire.

Omcan Empresa De Fabricacion Y Distribucion Inc. Y Maquinaria De Alimentos De America, Inc. dba Omcan y Omcan Inc. no son responsables de ningun daño o perjuicío causado por cualquier persona inadecuada o el uso descuidado de este equipo. El producto solo podra ser operado por una persona mayor de 18 años, en su sano juicio y no bajo alguna influencia de droga o alcohol, y que este ha sido entrenado en el correcto funcionamiento de esta máquina, y ésta usando ropa apropiada y autorizada. Cualquier modificación a la máquina anúla la garantía y puede causar daños a las personas usando la máquina mientras esta en el funcionamiento.

REVISE EL PAQUETE A SU LLEGADA

Tras la recepcion de un envio Omcan favor inspeccionar daños externos. Si no hay daños evidentes en el empaque exterior, Habra el carton para asegurararse que todos los articulos solicitados ésten dentro de la caja y no encuentre daños ocultos en la máquina. Si el paquete ha sufrido un manejo de poco cuidado, golpes o daños (visible o oculto) por favor anote en la factura antes de aceptar la entrega y contacte Omcan dentro de las 24 horas, de modo que podamos iniciar una reclamación con la compañia. Un informe detallado sobre los daños causados a la máquina debe ser llenado en el plazo de tres días, desde la fecha de entrega que se muestra en los documentos de envío. Omcan no tiene ningun recurso por productos dañados que se enviaron a recoger por terceros.

Antes de utilizar cualquier equipo, siempre lea y familiarizarse con todas las instrucciones de funcionamiento y seguridad.

Omcan le gustaría darle las gracias por la compra de esta máquina. Es de la mayor importancia para salvar estas instrucciones para futuras consultas. Además, guarda la caja original y el embalaje para el envío del equipo si servicio técnico o devolución de la máquina que se requiere.

Safety and Warranty

Handle with care Unplug the wall socket first. Never tilt it over 45 degrees when handling.	**Dry place** Always place the refrigerator in a dry location.

Safety and Warranty

Sufficient space The distance from both sides and back of refrigerator to wall or other substance must be no less than 10 cm (4”). The refrigeration capability may decrease if its surrounding space is too small to circulate air.	**Well ventilated** Always place the refrigerator in an area with proper ventilation. When using for the first time, wait at least 24 hours after handling to start.
Far from heat source Never place the refrigerator in direct sunlight. Never place refrigerator near heat source as it reduces refrigeration capabilities.	**Heavy load** Never put any heavy objects on top of the refrigerator.
Do not make holes Never make any holes on the refrigerator. Do not attach any objects onto the refrigerator.	**Stable Location** Unpack and place the refrigerator on level and stable ground.
Exclusive power socket Normally, the power supply should be 100 – 120V, 60 Hz single phase AC with exclusive single phase receptacle.	**Do not share the socket** Never let the refrigerator share a socket with another appliance. The cable may become hot and this may cause a fire. **DO NOT USE EXTENSION CORDS.**
Protect cables Never break or damage the cables as this may cause current leakage resulting in a fire.	**No water flushing** Never spray down refrigerator with pressurized water supply.
Avoid flammable and explosive objects Never put any flammable or explosive items inside the refrigerator such as gasoline or alcohol. Never put any dangerous products in close proximity to the refrigerator.	**No spray** Do not spray the unit with a flammable substance such as paint. This may result in a fire.
After power break After a power break or unplugging the refrigerator, always wait at least 5 minutes before starting the refrigerator again.	**Medical Storage** No medicine is allowed to be kept inside the refrigerator.

NOTE

- The electric circuit diagram and parameters on the product name plate are subject to change without the manufacturer having to change the manual.
- The design might be improved without notice.
- If the power cord is damaged, it must be replaced by the manufacturer, its service agent or a qualified electrician in order to avoid injury.

WARNING: The unit uses R290 refrigerant. Make sure that all precautions against fire have been taken.

RESIDENTIAL USERS: Vendor assumes no liability for parts or labor coverage for component failure

or other damages resulting from installation in non-commercial or residential applications. The right is reserved to deny shipment for residential usage; if this occurs, you will be notified as soon as possible.

1 YEAR PARTS AND LABOUR BENCH WARRANTY

Within the warranty period, contact Omcan Inc. at 1-800-465-0234 to schedule a drop off to either an Omcan authorized service depot in the area, or to an Omcan Service warehouse to repair the equipment.

Unauthorized maintenance will void the warranty. Warranty covers electrical and part failures, not improper use.

Please see https://omcan.com/disclaimer for complete info.

WARNING:

The packaging components are classified as normal solid urban waste and can therefore be disposed of without difficulty.

In any case, for suitable recycling, we suggest disposing of the products separately (differentiated waste) according to the current norms.

DO NOT DISCARD ANY PACKAGING MATERIALS IN THE ENVIRONMENT!

Technical Specifications

Model	RS-CN-0120-5	RS-CN-0160-5	RS-CN-0202-5
Capacity	120 L / 4.2 cu.ft.	160 L / 5.65 cu.ft.	202 L / 7.13 cu.ft.
Rack Size	13.2” x 25” 335 x 636mm	13.2” x 32” 335 x 813mm	13.2” x 45.5” 335 x 1156mm
	14.4” x 25” 367 x 636mm	14.4” x 32” 367 x 813mm	14.4” x 45.5” 367 x 1156mm
Shelf Load Capacity	33.1 lbs. / 15 kgs.		44.1 lbs. / 20 kgs.
Temperature Range	0 - 12°C / 32 - 53.6°F		
Max Ambient Temp Rating	24°C / 75°F		
Power Input	160 W		360 W
Rated Current	2.7 / 3A	3A	3.9A
Electrical	110V / 60Hz / 1		
Refrigerant	R290		
Weight	125.7 lbs. / 57 kgs.	145.5 lbs. / 66 kgs.	195.1 lbs. / 88.5 kgs.
Packaging Weight	132.3 lbs. / 60 kgs.	153.2 lbs. / 69.5 kgs.	203.9 lbs. / 92.5 kgs.
Dimensions	27.6” x 22.4” x 27” 702 x 568 x 686mm	34.6” x 22.4” x 27” 880 x 568 x 686mm	48” x 22.4” x 27” 1219 x 568 x 686mm
Packaging Dimensions	30.4” x 24.7” x 28.9” 773 x 627 x 735mm	37.4” x 24.7” x 28.9” 951 x 627 x 735mm	50.8” x 24.7” x 28.9” 1290 x 627 x 735mm
Item Number	47107	47278	47279

Operation

BEFORE USE

Ensure the unit is upright and positioned in its location for 12 hours prior to use.

Plug the refrigerator in a 110V~ socket exclusively for the unit. After the refrigerator is running, test the air suction to confirm it is sufficiently cold. Then you may put food inside the unit. Make sure the food product is already cooled before placing it in the display case. The unit should not be used to cool food products.

DIGITAL TEMPERATURE CONTROLLER

The digital temperature controller is easy to operate and controls the compressor.

- The main functions are: Temperature display, temperature control, manual control, automatic defrost, light control, value storing, self-testing and parameter locking.

Operation

Digital Controller Operation:

1. Set Temperature:
   Press **SET** and the set temperature is displayed.
   Press ▲ or ▼ button to modify and store the displayed value.
   Press **SET** to exit the adjustment and display the cold-room temperature.
2. If no buttons are pressed within 10 seconds, the cold-room temperature will be displayed.
3. Illumination:
   Press the light button, it lights. Press the light button again, the light turns off.
4. Manual start/stop defrost:
   Press the light button and hold for 6 seconds to defrost or stop defrost.
5. Refrigerant LED:
   During refrigeration, the LED is on. When the cold-room temperature is consistent, the LED is off. During the delay start, the LED flashes.
6. Defrost LED:
   During defrosting, the LED is on. When it stops defrosting, the LED is off. During the delay display of defrost, the LED flashes.
7. Digital Controller Reset:
   When the display shows “disorder”, press ▼ button for 2 seconds until buzzer rings, quickly press ▲ button for 6 seconds until the buzzer rings again. The display will flash for 3 seconds and it will be restored to the factory setting.

CAUTION

- Reducing the frequency of opening the refrigerator door will keep more cold air inside the refrigerator.
- Do not block air suction or outlet. Air must continue circulating to increase refrigeration capability.
- Do not over fill or over stock the refrigerator, as it will influence the cooling effect. Adjust the rack height for proper food storage.
- Cool hot food down to room temperature before storing it in the refrigerator.
- Try to reduce open times and keep refrigerator cold and closed, if power is ever off. Only allow a skilled service individual with proper tools to repair damaged power cables. Never touch compressor, as it can result in injury.
- If supply cord is damaged, it must be replaced by the manufacturer, its service agent, or similarly qualified persons in order to avoid a hazard.
- This appliance is not intended for use by persons (including children) with reduced physical, sensory or mental capabilities, or lack of experience and knowledge, unless they have been given supervision or instruction concerning use of the appliance by a person responsible for their safety.
- Children should be supervised to ensure that they do not play with the appliance.

WARNING: Keep ventilation openings, in the appliance enclosure or in the built-in structure, clear of obstruction.
WARNING: Do not use mechanical devices of other means to accelerate the defrosting process, other than those recommended by the manufacturer.
WARNING: Do not damage the refrigerant circuit.
WARNING: Do not use electrical appliances inside the food storage compartments of the appliance, unless they are of the type recommended by the manufacturer.

Operation

CAUTION: Risk of fire. The height of the triangle in the symbol should be at least 15mm.

Maintenance

Keep the refrigerator clean and perform periodical maintenance as necessary. Always unplug the socket before maintenance. Never use a damaged plug or loose socket in order to prevent from electric shock or short circuit. Never flush the refrigerator. Never use alkali detergent, soap, gasoline, acetone or brush.

1. Clean outside:
   Dip soft cloth in neutral detergent (tableware detergent) to clean the outside of the refrigerator and then wipe it with dry soft cloth.
2. Clean inside:
   Take rack out for cleaning with water. Use soft cloth to wipe the box.
3. Shut down refrigerator for a long time:
   Take all food out and unplug the wall socket. Clean both inside and outside of the refrigerator thoroughly and open the door for sufficient dry. The glass breaks easily. Keep the glass far from children.
4. Replacement of lamp in the light box:
   If the LED lamp is damaged, it must be replaced by the manufacturer, or its service agent.

Troubleshooting

Trouble	Cause and Remedy
No refrigeration	Is the plug in the socket well?
	Is the fuse broken?
	Is there no power?
Unsatisfactory refrigeration	Is it under the sunlight? Is there any heat source nearby?
	Is the surrounding ventilation bad?
	Does the door close well? Has the door been open for a long time?
	Is the door seal strip deformed or damaged?
	Is food congested or too much?
	Does food block the air suction outlet?
	Regulate the temperature controller.
Too much noise	The refrigerator is not level.
	The refrigerator touches the wall or other objects.
	There is a loose part in the refrigerator.
Contact Omcan at 1-800-465-0234 for help if simple troubleshooting does not solve the problems.	

The following situations are not problems:

1. The murmur of water is heard when the refrigerator is working. This is normal as the coolant is circulating in the system.

2. During wet season, condensation may be found on the outside of the refrigerator. This is not a problem, this is caused by high humidity. Simply use a cloth to wipe it.

Parts Breakdown

Model RS-CN-0120-5 *47107*

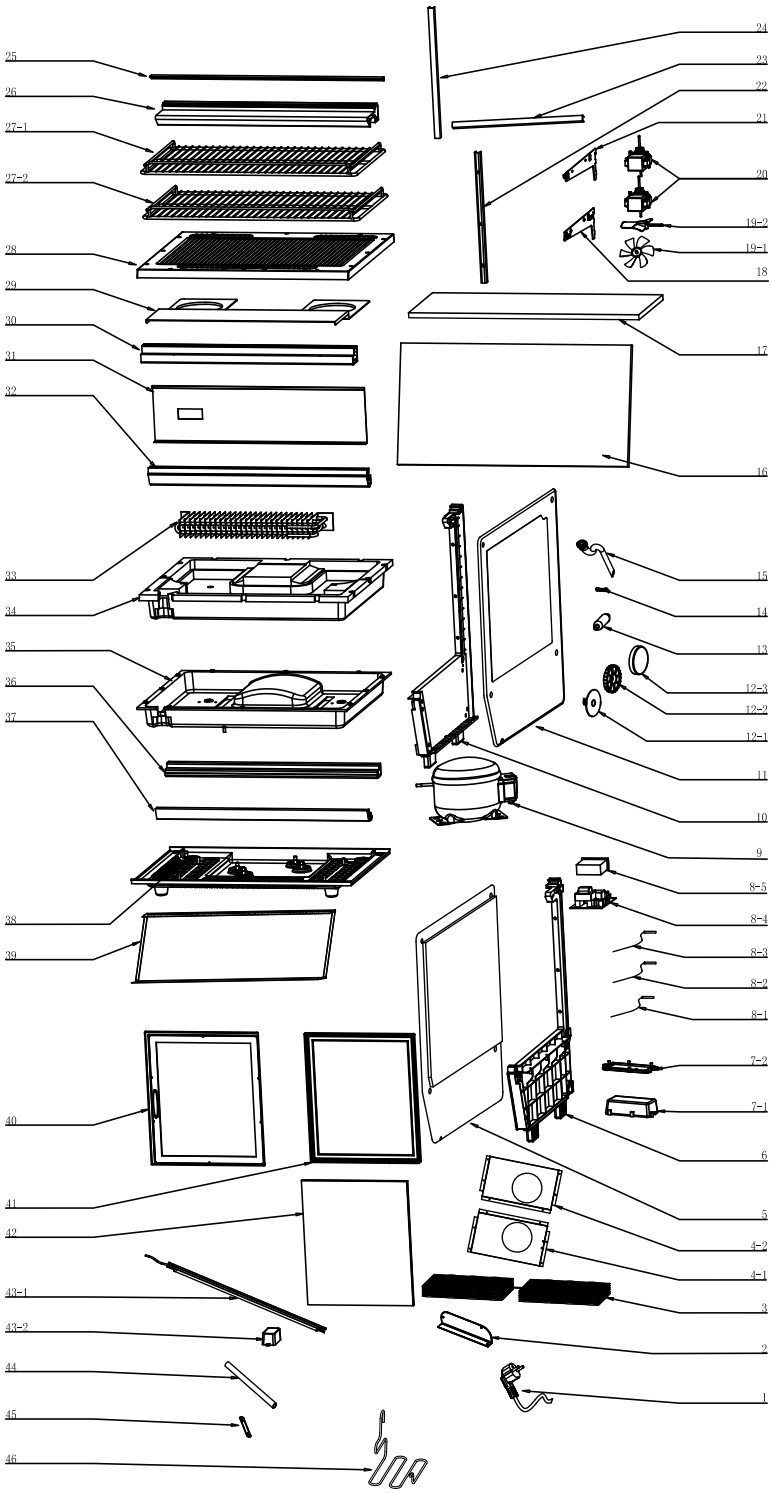

Parts Breakdown

Model RS-CN-0120-5 *47107*

Item No.	Description	Position
AA062	Power Cord for 47107	1
68510	Fixed Board of PCB Box for 47107	2
AA063	Condensator for 47107	3
AA047	Left Condensator Cushion for 47107	4-1
AH715	Right Condenser Pad for 47107	4-2
AH716	Left Glass for 47107	5
AH717	Left Panel for 47107	6
AA050	Control Box for 47107	7-1
AA051	Control Box Cover for 47107	7-2
68332	Temperature Sensor for 47107	8-1
AA049	Defrost Probe for 47107	8-2
AH718	High Temperature Sensor for 47107	8-3
AA052	Main Circuit Board for 47107	8-4
AA053	Digital Controller for 47107	8-5
AH719	Compressor for 47107	9
AH720	Right Panel for 47107	10
AH721	Right Glass for 47107	11
79314	Decoration Nut Gasket for 47107	12-1
79313	Nut Gasket for 47107	12-2

Item No.	Description	Position
79312	Nut Decoration for 47107	12-3
30624	Dry Filter for 47107	13
30617	Wire Board for 47107	14
30744	Water Pipe for 47107	15
AH722	Front Glass for 47107	16
AH723	Upper Glass for 47107	17
67313	Bottom Shelf Bracket Left for 47107	18
AH724	Fan Blade for 47107	19-1
30793	Fan Blade for 47107	19-2
AA055	Motor Fan for 47107	20
67314	Bottom Shelf Bracket Right for 47107	21
30751	Pillar for Bracket for 47107	22
AH725	Left Seal for 47107	23
AH726	Right Seal for 47107	24
30754	Decorative Board for 47107	25
30755	Top Panel for 47107	26
30756	Shelf 1 for 47107	27-1
30757	Shelf 2 for 47107	27-2
30758	Vent Tray for 47107	28

Item No.	Description	Position
30759	Evaporator Protect Board for 47107	29
30760	Rear Middle Pillar for 47107	30
30761	Rear Base Panel for 47107	31
AH727	Front Middle Pillar for 47107	32
AH728	Evaporator for 47107	33
30764	Foam Base of Evaporator for 47107	34
30765	Plastic Base for Foam for 47107	35
30766	Rear Bottom Pillar for 47107	36
30767	Front Bottom Pillar for 47107	37
AA058	Bottom Base of Compressor for 47107	38
30769	Front Frame for 47107	39
30770	Outer Door Frame for 47107	40
30771	Inner Door Frame for 47107	41
AH729	Door Glass for 47107	42
AA060	LED Light for 47107	43-1
68356	Driver for 47107	43-2
30742	Accumulator for 47107	44
AH730	Copper Tube Clamp for 47107	45
AH731	High Temperature Tube for 47107	46

Parts Breakdown

Model RS-CN-0160-5 *47278*

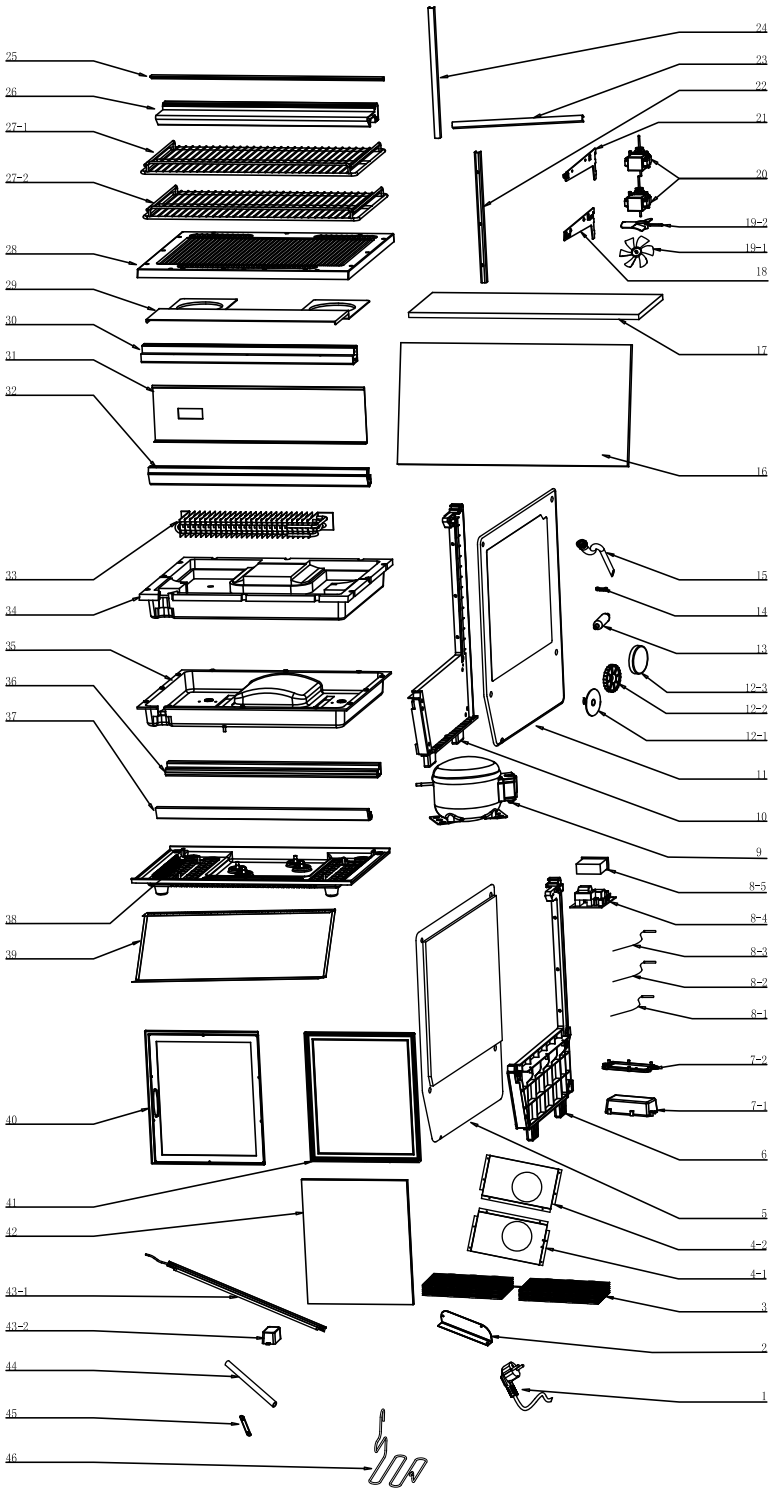

Parts Breakdown

Model RS-CN-0160-5 *47278*

Item No.	Description	Position
AA062	Power Cord for 47278	1
68510	Fixed Board of PCB Box for 47278	2
AA063	Condensator for 47278	3
AA047	Left Condensator Cushion for 47278	4-1
AH715	Right Condenser Pad for 47278	4-2
AH716	Left Glass for 47278	5
AH717	Left Panel for 47278	6
AA050	Control Box for 47278	7-1
AA051	Control Box Cover for 47278	7-2
68332	Temperature Sensor for 47278	8-1
AA049	Defrost Probe for 47278	8-2
AH718	High Temperature Sensor for 47278	8-3
AA052	Main Circuit Board for 47278	8-4
AA053	Digital Controller for 47278	8-5
AH719	Compressor for 47278	9
AH720	Right Panel for 47278	10
AH721	Right Glass for 47278	11
79314	Decoration Nut Gasket for 47278	12-1
79313	Nut Gasket for 47278	12-2

Item No.	Description	Position
79312	Nut Decoration for 47278	12-3
30624	Dry Filter for 47278	13
30617	Wire Board for 47278	14
30744	Water Pipe for 47278	15
AH732	Front Glass for 47278	16
AH733	Upper Glass for 47278	17
67313	Bottom Shelf Bracket Left for 47278	18
AH724	Fan Blade for 47278	19-1
30793	Fan Blade for 47278	19-2
AA055	Motor Fan for 47278	20
67314	Bottom Shelf Bracket Right for 47278	21
30751	Pillar for Bracket for 47278	22
AH725	Left Seal for 47278	23
AH726	Right Seal for 47278	24
30799	Decorative Board for 47278	25
30800	Top Panel for 47278	26
71684	Chrome Shelf 2 for 47278	27-1
71683	Chrome Shelf 1 for 47278	27-2
AH734	Vent Tray for 47278	28

Item No.	Description	Position
AH735	Evaporator Protect Board for 47278	29
30805	Rear Middle Pillar for 47278	30
30806	Rear Base Panel for 47278	31
AH736	Front Middle Pillar for 47278	32
AH737	Evaporator for 47278	33
30809	Foam Base of Evaporator for 47278	34
30810	Plastic Base for Pillar for 47278	35
68517	Rear Bottom Pillar for 47278	36
68516	Front Bottom Pillar for 47278	37
AA058	Bottom Base of Compressor for 47278	38
30814	Front Frame for 47278	39
30815	Outer Door Frame for 47278	40
30816	Inner Door Frame for 47278	41
AH738	Door Glass for 47278	42
AA066	LED Light for 47278	43-1
68356	Driver for 47278	43-2
30742	Accumulator for 47278	44
AH730	Copper Tube Clamp for 47278	45
AH731	High Temperature Tube for 47278	46

Parts Breakdown

Model RS-CN-0202-5 *47279*

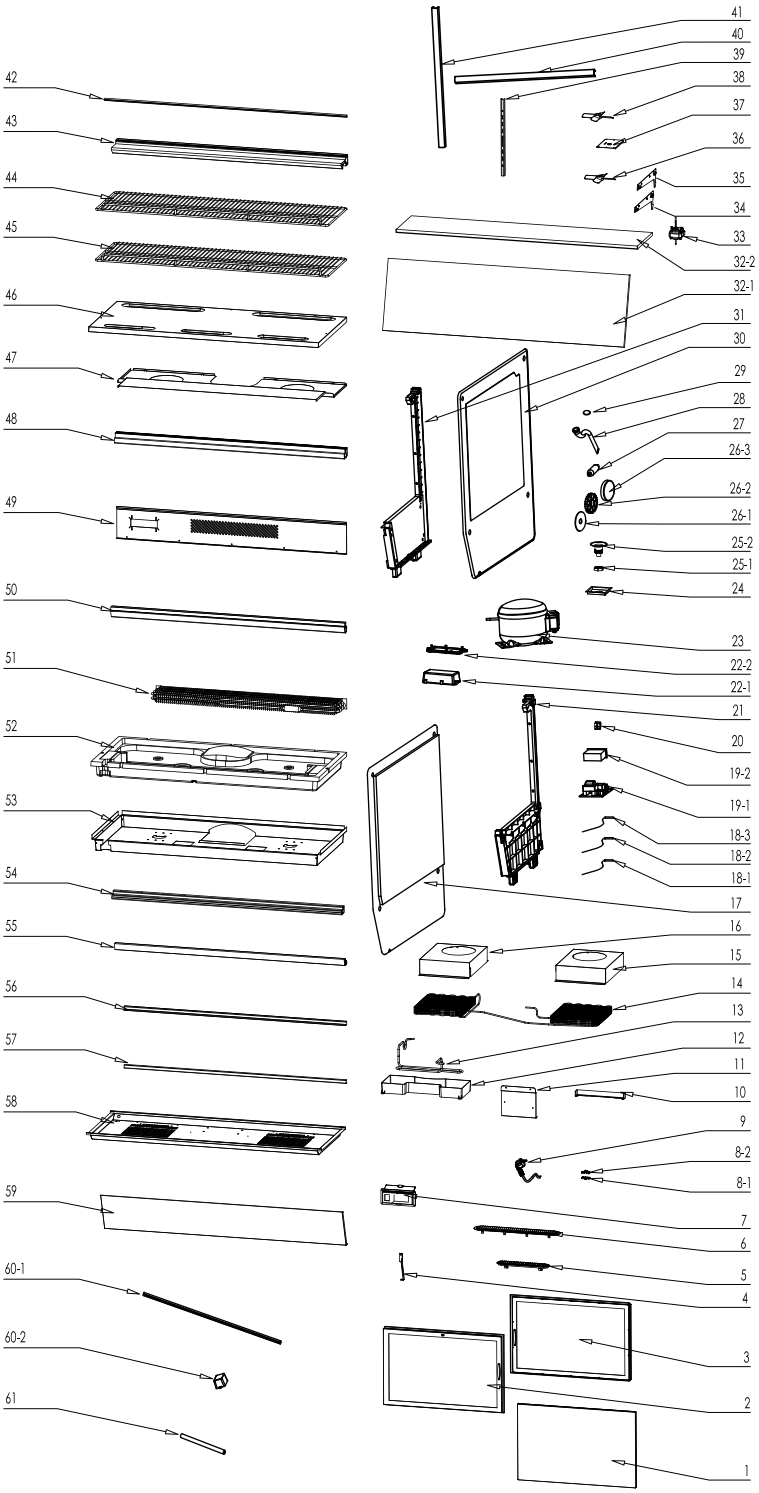

Parts Breakdown

Model RS-CN-0202-5 *47279*

Item No.	Description	Position
AA068	Door Glass for 47279	1
AA069	Inner Door Frame for 47279	2
AA070	Outer Door Frame for 47279	3
AH739	Front Middle Support for 47279	4
30776	Cover for Air Outlet for 47279	5
AA072	Cover for Air Suction for 47279	6
68298	Switch Base for 47279	7
61246	Wire Clip Holder for 47279	8-1
61245	Wire Clip Cover for 47279	8-2
AA062	Power Cord for 47279	9
AA073	Condenser Limiting Plate for 47279	10
AA074	Fixed Board of PCB Box for 47279	11
60948	Water Receiver for 47279	12
AA075	Tray of Heater for 47279	13
AA076	Condensator for 47279	14
AA077	Right Condensator Cushion for 47279	15
AA078	Left Condensator Cushion for 47279	16
AH716	Left Glass for 47279	17, 30
68332	Temperature Sensor for 47279	18-1
AA049	Defrost Probe for 47279	18-2
AH718	High Temperature Sensor for 47279	18-3
AA052	Main Circuit Board for 47279	19-1
AA082	Digital Controller for 47279	19-2

Item No.	Description	Position
60119	Switch for 47279	20
AH717	Left Panel for 47279	21
AA050	Control Box for 47279	22-1
AA051	Control Box Cover for 47279	22-2
60534	Compressor for 47279	23
AA083	Backing Plate for 47279	24
71518	Nut for 47279	25-1
AA084	Drainage Pipe Joint for 47279	25-2
79314	Decoration Nut Gasket for 47279	26-1
79313	Nut Gasket for 47279	26-2
79312	Nut Decoration for 47279	26-3
30624	Dry Filter for 47279	27
30744	Water Pipe for 47279	28
68368	Snap Ring for 47279	29
AH720	Right Panel for 47279	31
AH732	Front Glass for 47279	32-1
AH733	Upper Glass for 47279	32-2
AA086	Motor Fan for 47279	33
67313	Bottom Shelf Bracket Left for 47279	34
67314	Bottom Shelf Bracket Right for 47279	35
AA087	Fan Blade for 47279	36
79662	Metal Base of Fan Motor for 47279	37
AH740	Fan Blade for 47279	38

Item No.	Description	Position
30751	Pillar for Bracket for 47279	39
AH725	Left Seal for 47279	40
AH726	Right Seal for 47279	41
AA089	Decorative Board for 47279	42
AA090	Top Panel for 47279	43
AA091	Shelf 1 for 47279	44
AA092	Shelf 2 for 47279	45
AA093	Vent Tray for 47279	46
AA094	Evaporator Protect Board for 47279	47
AA095	Rear Middle Pillar for 47279	48, 50
AA096	Rear Base Panel for 47279	49
AA098	Evaporator for 47279	51
AA099	Foam Base of Evaporator for 47279	52
AA100	Plastic Base for Pillar for 47279	53
AA101	Rear Bottom Pillar for 47279	54
AA102	Front Bottom Pillar for 47279	55
AA103	Rear Bottom Pillar Lining for 47279	56
AA104	Front Bottom Pillar Lining for 47279	57
AA105	Bottom Base of Compressor for 47279	58
AA106	Front Frame for 47279	59
AA107	LED Light for 47279	60-1
68356	Driver for 47279	60-2
30742	Accumulator for 47279	61

Electrical Schematics

Model RS-CN-0120-5 *47107*
Model RS-CN-0160-5 *47278*
Model RS-CN-0202-5 *47279*

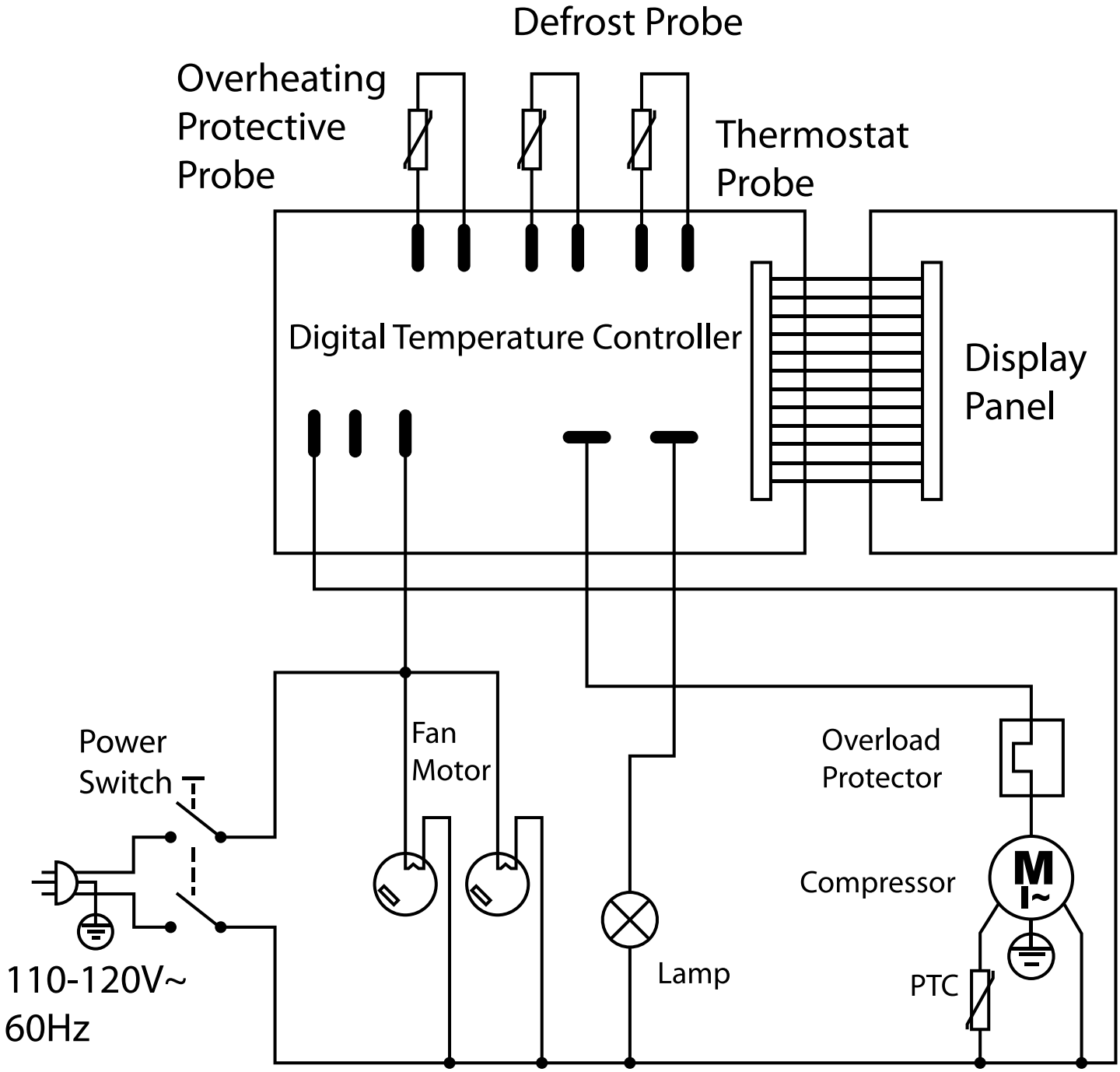

Warranty Registration

Thank you for purchasing an Omcan product. To register your warranty for this product, complete the information below, tear off the card at the perforation and then send to the address specified below. You can also register online by visiting:

Merci d'avoir acheté un produit Omcan. Pour enregistrer votre garantie pour ce produit, complétez les informations ci-dessous, détachez la carte au niveau de la perforation, puis l'envoyer à l'adresse spécifié ci-dessous. Vous pouvez également vous inscrire en ligne en visitant:

Gracias por comprar un producto Omcan usted. Para registrar su garantía para este producto, complete la información a continuación, cortar la tarjeta en la perforación y luego enviarlo a la dirección indicada a continuación. También puede registrarse en línea en:

https://omcan.com/warranty-registration/

For mailing in Canada

Pour postale au Canada

Por correo en Canadá

OMCAN
PRODUCT WARRANTY REGISTRATION
3115 Pepper Mill Court,
Mississauga, Ontario
Canada, L5L 4X5

For mailing in the US

Pour diffusion aux États-Unis

Por correo en los EE.UU.

OMCAN
PRODUCT WARRANTY REGISTRATION
4450 Witmer Industrial Estates, Unit 4,
Niagara Falls, New York
USA, 14305

or email to: service@omcan.com

Purchaser's Information

Name: _____

Address: _____

City: _____ Province or State: _____ Postal or Zip: _____

Country: _____

Dealer from which Purchased: _____

Dealer City: _____ Dealer Province or State: _____

Invoice: _____

Company Name: _____

Telephone: _____

Email Address: _____

Type of Company:

☐ Restaurant ☐ Bakery ☐ Deli

☐ Butcher ☐ Supermarket ☐ Caterer

☐ Institution *(specify)*: _____

☐ Other *(specify)*: _____

Model Name: _____ Model Number: _____ Serial Number: _____

Machine Description: _____

Date of Purchase (MM/DD/YYYY): _____ Date of Installation (MM/DD/YYYY): _____

Would you like to extend the warranty? ☐ Yes ☐ No

Thank you for choosing Omcan | Merci d'avoir choisi Omcan | Gracias por elegir Omcan

Since 1951 Omcan has grown to become a leading distributor of equipment and supplies to the North American food service industry. Our success over these many years can be attributed to our commitment to strengthen and develop new and existing relationships with our valued customers and manufacturers. Today with partners in North America, Europe, Asia and South America, we continually work to improve and grow the company. We strive to offer customers exceptional value through our qualified local sales and service representatives who provide convenient access to over 6,500 globally sourced products.

Depuis 1951 Omcan a grandi pour devenir un des “leaders” de la distribution des équipements et matériel pour l’industrie des services alimentaires en Amérique du Nord. Notre succès au cours de ces nombreuses années peut être attribué à notre engagement à renforcer et à développer de nouvelles et existantes relations avec nos clients et les fabricants de valeur. Aujourd’hui avec des partenaires en Amérique du Nord, Europe, Asie et Amérique du Sud, nous travaillons continuellement à améliorer et développer l’entreprise. Nous nous efforçons d’offrir à nos clients une valeur exceptionnelle grâce à nos ventes locales qualifiées et des représentants de service qui offrent un accès facile à plus de 6500 produits provenant du monde entier.

Desde 1951 Omcan ha crecido hasta convertirse en un líder en la distribución de equipos y suministros de alimentos en América del Norte industria de servicios. Nuestro éxito en estos años se puede atribuir a nuestro compromiso de fortalecer y desarrollar nuevas relaciones existentes con nuestros valiosos clientes y fabricantes. Hoy con socios de América del Norte, Europa, Asia y América del Sur, que trabajan continuamente para mejorar y crecer la empresa. Nos esforzamos por ofrecer a nuestros clientes valor excepcional a través de nuestro local de ventas y representantes de los servicios que proporcionan un fácil acceso a más de 6,500 productos con origen a nivel mundial.