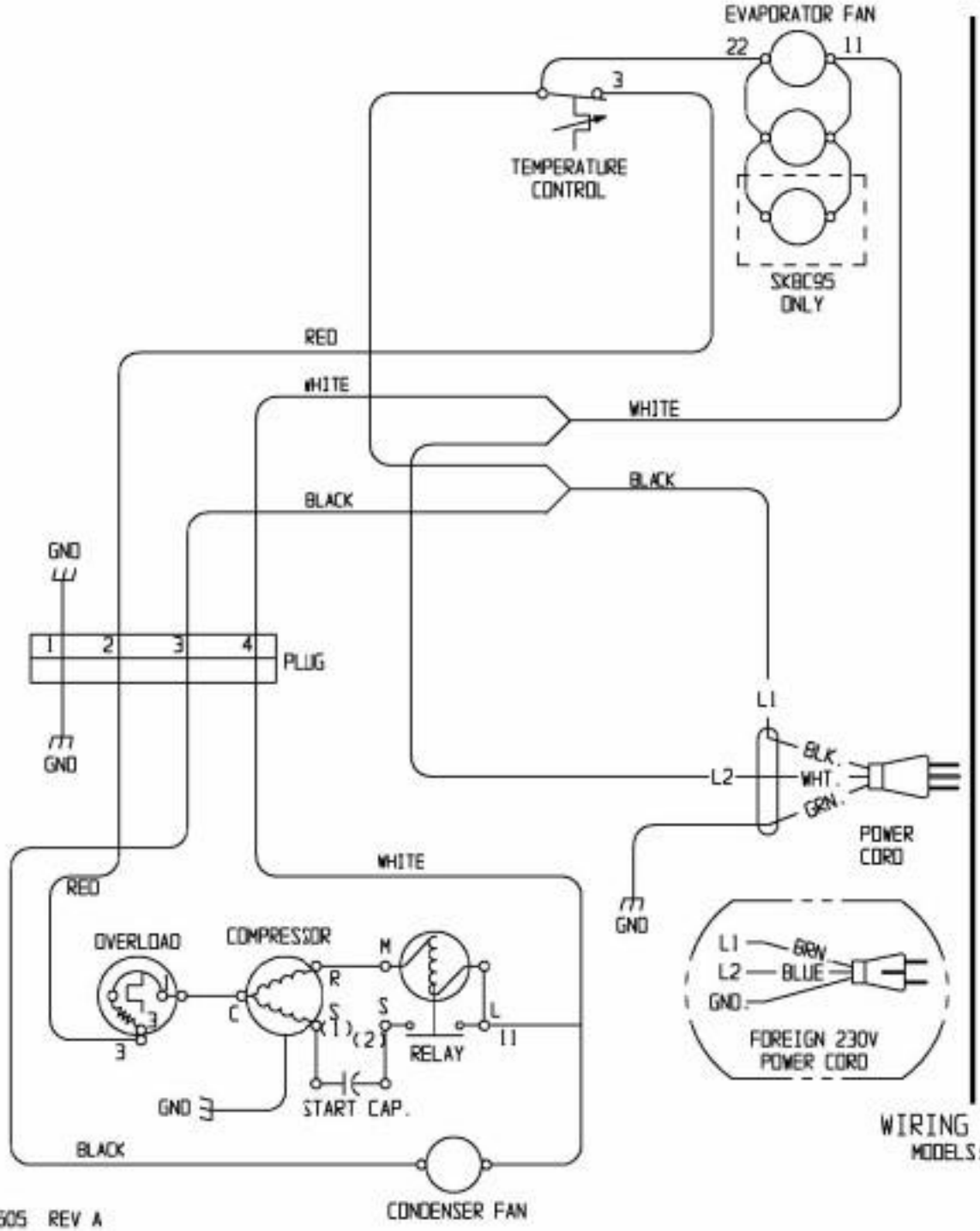

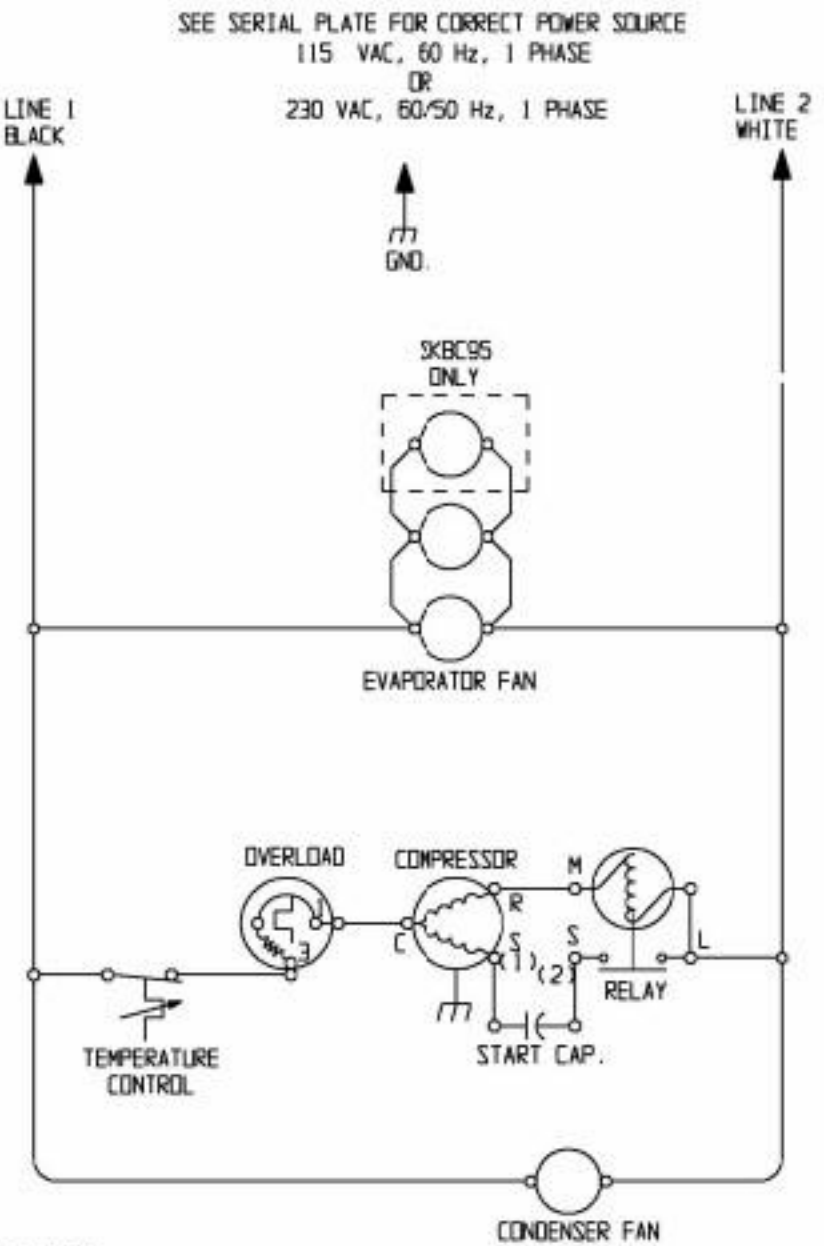

WIRING DIAGRAM

MODELS: SKBC50
SKBC65
SKBC95

29505 REV A