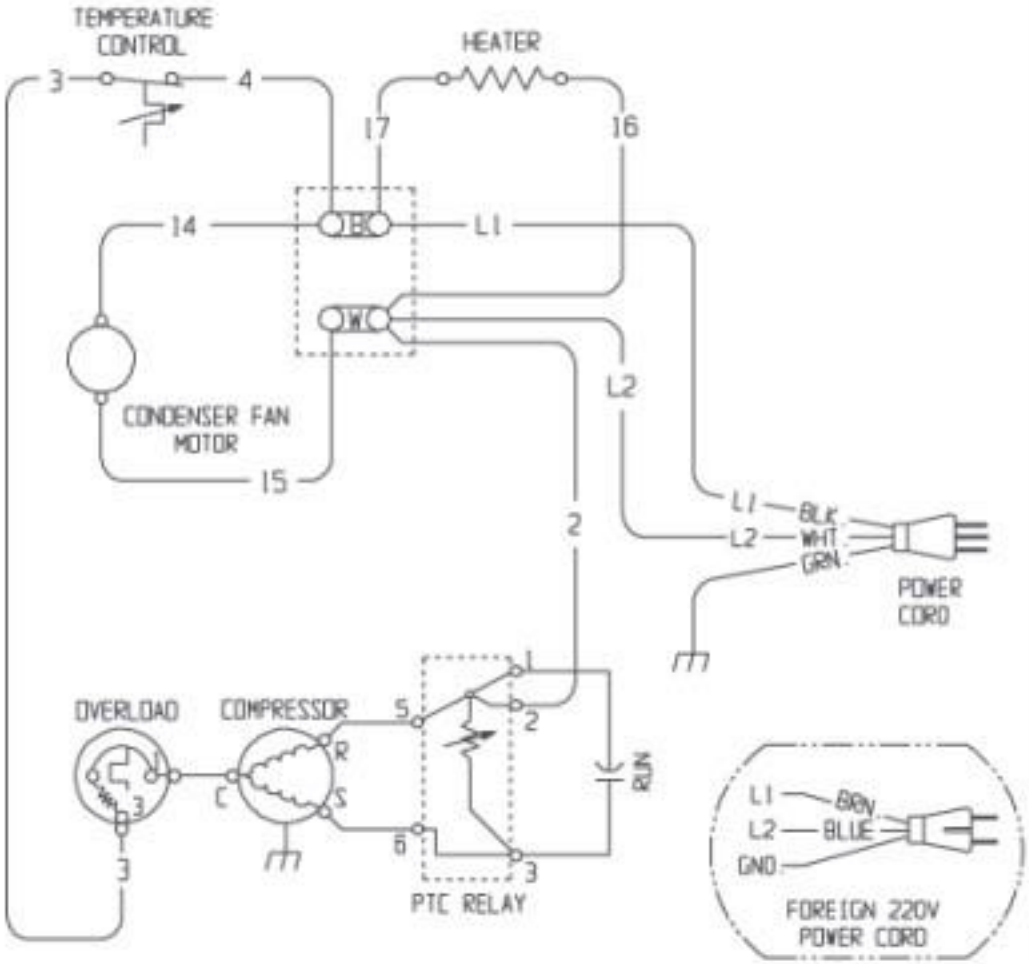


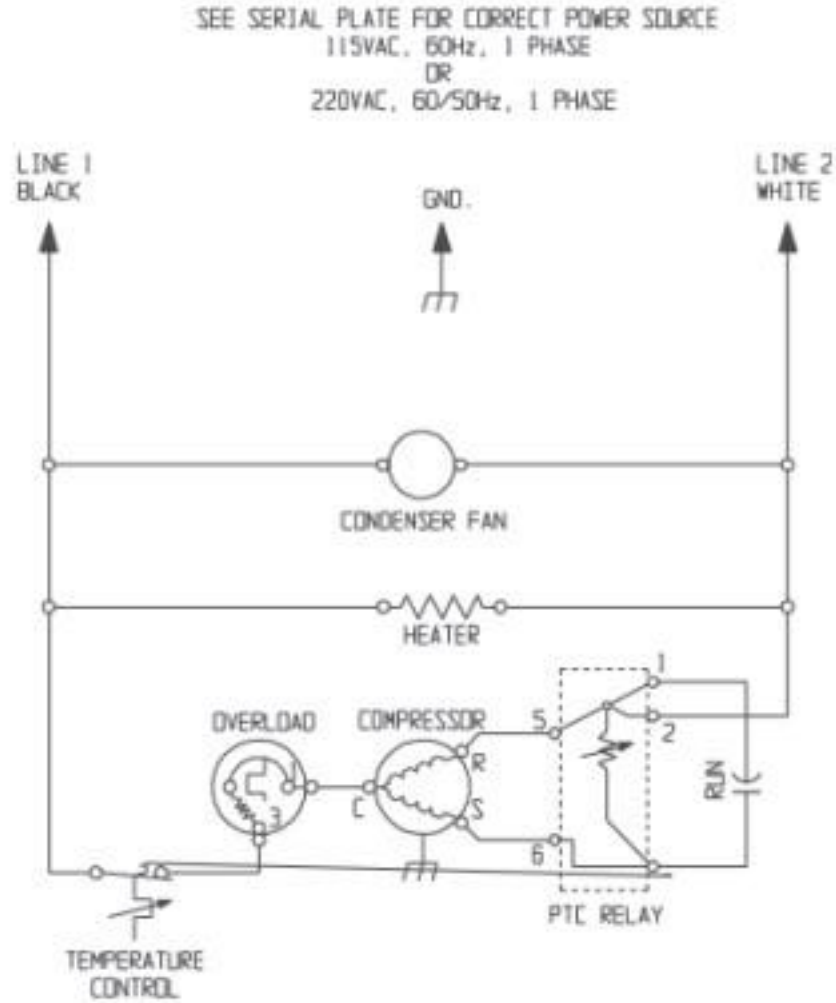


**WIRING DIAGRAM**
**Models SKFS AND SKDI**
115V, 60Hz, 1 PH
OR
230V, 50 Hz, 1 PH