INSTRUCTION & PARTS MANUAL

UTENSIL

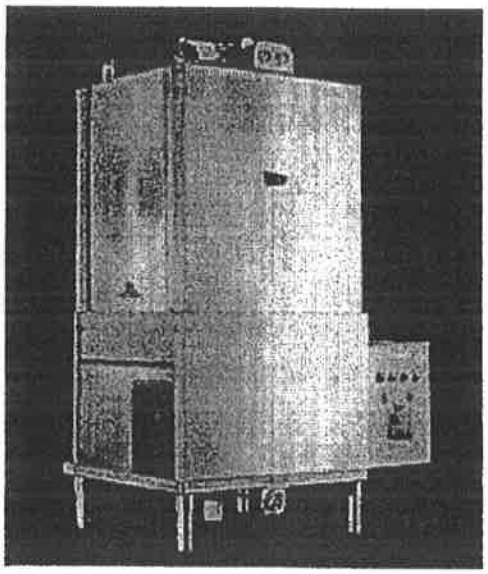

STERO
Dishwashing Machines

THE STERO COMPANY
DOOR TYPE
UTENSIL WASHER
PARTS MANUAL

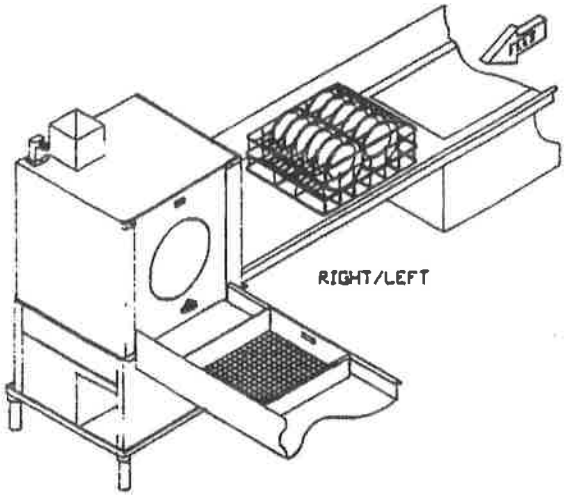

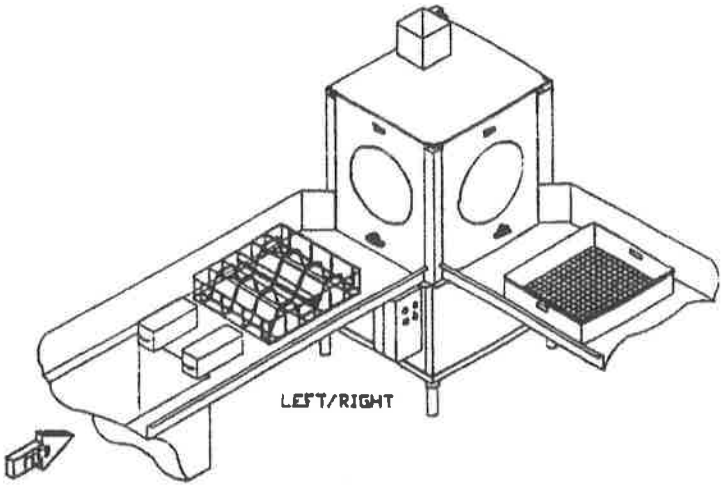

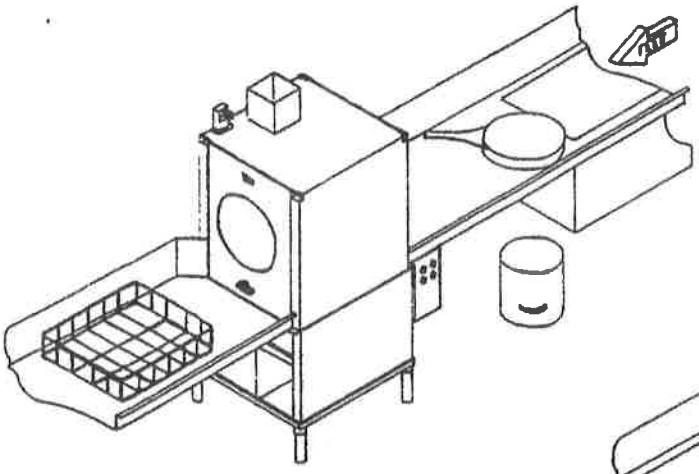

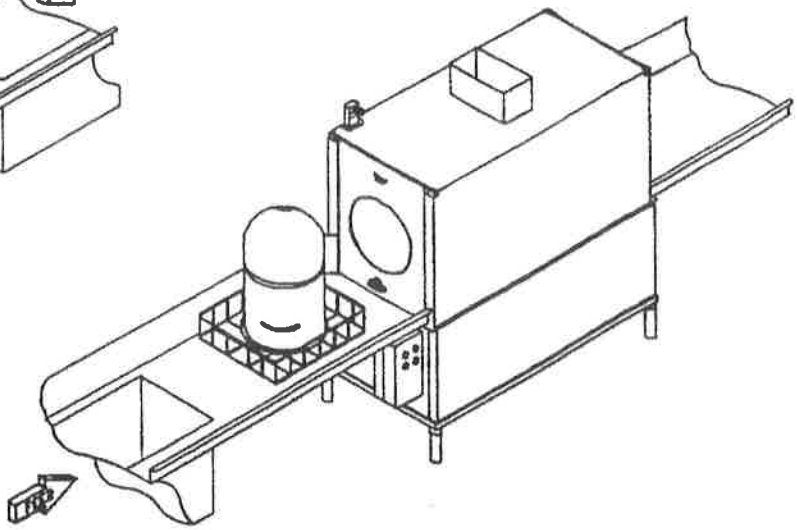

THE STERO COMPANY
3200 LAKEVILLE HWY.
PETALUMA CA. 94952
707 762-0071

TOLL FREE CALL 800 762-7600

The Stero Company

WARRANTY POLICY

This warranty is in lieu of all other warranties, expressed or implied, including without limitation any implied warranty of merchantability, fitness for a particular purpose or non-infringement, and of any other obligation or liability on the part of Stero, whether in contract, strict liability, tort or otherwise.

The Stero Company warrants this equipment to be free from defects in material and workmanship, under normal use and operation, for a period of one (1) year from the date of initial start up or eighteen (18) months from the date of shipment from the factory, whichever comes first. This warranty is conditioned upon the customer's maintenance and care as outlined in the service manual and upon return of the warranty registration card. Repairs will be performed during Stero's authorized service agencie's normal business hours. If the customer requires after hours service the customer will be responsible for the overtime premium.

Machine is warranted only for the initial place of installation. Removal of machine automatically terminates the warranty.

Stero shall have no liability under this warranty unless the customer promptly notifies Stero or it's factory authorized service agent of any alleged defects. All defective parts become the property of Stero and must be returned to Stero, or it's agent, at Stero's expense, within thirty (30) days from the date of the part's replacement. Parts replaced within the warranty carry only the unexpired portion of the machine's warranty. Not covered by this warranty are changes (parts and/or labor) necessitated by or damage resulting from: water conditions, accident, alteration, improper use, abuse, tampering, improper installation or failure to follow operating and maintenance procedures. Examples of the foregoing, but without limitations are: (1) Damage to the machine resulting from excessive concentrations of chlorine or de-liming acid solutions; (2) Use with utility service other than designated on the rating plates; (3) Improper connection to utility service; (4) Inadequate or excessive water and/or steam pressure; (5) Leaks caused by faulty installation; (6) Component failures caused by water leaks due to faulty installation; (7) Failure to comply to local building codes; (8) Failures due to deposits resulting from water or steam conditions, detergents, chemicals, or improper cleaning; (9) Resetting breakers, overloads, or safety thermostats; (10) Adjustments of thermostats after 90 days of operation; (11) Improper opening of utility supply valves; (12) Cleaning drain valves, line strainers, rinse nozzles, etc.; (13) Improper installation or malfunction of chemical dispensing equipment supplied by others; and (14) Failure to provide regular maintenance and daily cleaning as outlined in the service manual. In no event will Stero be liable for loss or damage to or loss of use of facilities or other property, additional labor costs, loss of revenue, loss of anticipated profits, or other damages of any kind what so ever, whether direct, indirect, incidental or consequential.

Installation, Operation and Care of

UTENSIL

SAVE THESE INSTRUCTIONS

GENERAL

Utensil Washer is a semi-automatic rack-type washer. It uses a 3 phase 3 H.P. motor.

The fill line incorporates an atmospheric vacuum breaker to prevent any reverse flow of water from the utensil washer into the potable water supply.

A float, located in the wash tank, will shut off the heat supply if the water level becomes too low. When the water returns to a safe level, the heating circuit is again operational.

INSTALLATION

UNPACKING

Immediately after unpacking, the machine should be checked for possible shipping damage. If this machine is found to be damaged after unpacking, save the packing material and contact the carrier within 15 days of delivery.

When lifting the washer with a hi-lift or forklift, be sure to place the forks in such a position that the drain assembly beneath the tank is not damaged.

Prior to installation, test the electrical service to assure that it agrees with the specifications on the machine data plate located on the side of the control box.

LOCATION

Place the machine in its operating position. Before finalizing location, make sure that consideration has been given for electrical conduit, water supply, drain connections, steam supply (if applicable), tabling, and adequate clearance for opening the door.

The utensil washer must be level before any connections are made. Turn the threaded feet as required to level the machine and adjust to the desired height.

A hood or vent may be required in order to meet local codes.

PLUMBING

WARNING: PLUMBING CONNECTIONS MUST COMPLY WITH APPLICABLE SANITARY, SAFETY, AND PLUMBING CODES.

Drain

The drain connection is made using 2" pipe.

Water Supply

The water supply line is connected to the line strainer with ¾" pipe. The water supply line is located on top of the machine at the rear (see Fig. 1).

Minimum water temperatures are: 150°F wash and 180°F rinse.

Proper utensil washer operation requires a flowing pressure of 20 ± 5 p.s.i. at the washer. If the flowing pressure exceeds 25 p.s.i., a pressure reducing valve (not supplied) must be installed in the water supply line.

A pressure gauge (Fig. 1) is provided for verification of proper water pressure.

Refer to the floor plans on Pages 10 & 11 for plumbing information.

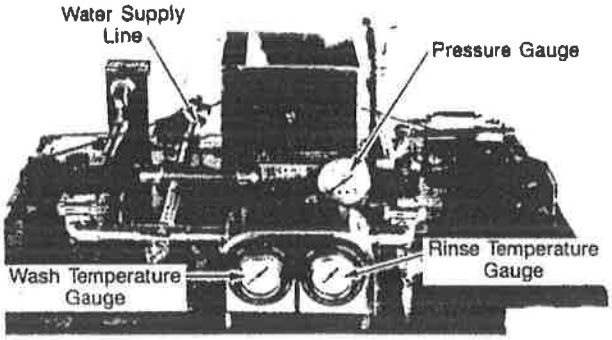

Fig. 1

ELECTRICAL CONNECTIONS

WARNING: ELECTRICAL AND GROUNDING CONNECTIONS MUST COMPLY WITH THE APPLICABLE PORTIONS OF THE NATIONAL ELECTRICAL CODE AND/OR OTHER LOCAL ELECTRICAL CODES.

WARNING: DISCONNECT ELECTRICAL POWER SUPPLY AND PLACE A TAG AT THE DISCONNECT SWITCH INDICATING THE CIRCUIT IS BEING WORKED ON.

A fused disconnect switch or circuit breaker (not supplied) must be installed in each electrical service line supplying this utensil washer and should meet the requirements of your local electrical code. There is one service connection for the motors and controls. A second service connection is required for machines with electric tank heat.

All connections are made at the terminal block in the control box. Connect a permanent electrical power supply to the incoming power supply block, and connect a ground lead to the grounding lug in the control box if grounding is not provided by the conduit used.

Three-phase motors must rotate in the direction of the arrow on the pump housing. In order to check rotation, close the machine doors and press the FILL button on the control box (See Fig. 3). When the machine is completely filled, turn the manual WASH/RINSE switch (Fig. 3) to WASH. Watch the motor output shaft where it enters the pump housing. The motor shaft must rotate in the direction of the arrow on the pump motor housing.

If the rotation is incorrect, **DISCONNECT ELECTRICAL POWER SUPPLY** and interchange any two of the incoming motor power supply leads. Re-energize the washer and verify correct rotation.

The wiring diagram is located inside the control box. Refer to the floor plans on pages 10 & 11 for any additional electrical information.

OPERATION

PREPARATION

Place the two strainers and tank spacer in position (Fig. 4).

Scatter the initial charge of detergent on the strainers. Replenish as needed. If an automatic detergent dispenser has been added, follow supplier's instructions.

Turn the DRAIN VALVE HAND KNOB (Fig. 2) clockwise to the CLOSED position.

Close the counterbalanced doors.

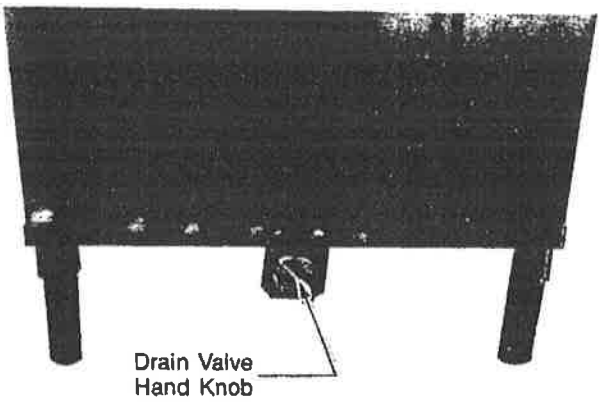

Fig. 2

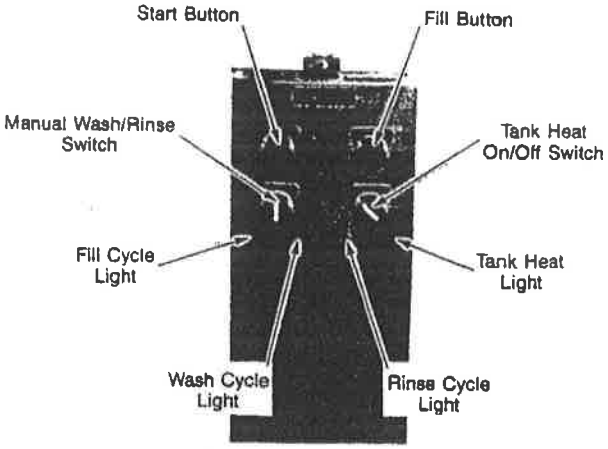

Fig. 3

Press the FILL button on the control box (Fig. 3). The red pilot light will be illuminated until the tank has been filled.

Once the machine has been filled, turn the TANK HEAT switch (Fig. 3) to ON. The red HEAT light will be illuminated and the heater will maintain the wash water temperature at a minimum of 150°F.

UTENSIL WASHING

Thoroughly scrape the utensils to remove large particles of food and debris.

Fill the utensil rack, raise the counterbalanced doors, slide the rack into the machine, and close the doors.

Automatic Operation

Set the WASH/RINSE switch (Fig. 3) to OFF. Push the START button and the machine will automatically run through a 128-second wash cycle, immediately followed by a 15-second rinse cycle. The WASH and RINSE red lights will be illuminated during their respective cycles. The automatic cycle times are preset at the factory; however, if necessary, they may be increased. Contact your local [illegible] Service Office.

Manual Operation

Set the WASH/RINSE switch (Fig. 3) to WASH. The machine will continue to wash as long as the switch is in this mode. When ready to rinse, hold the WASH/RINSE switch in the RINSE position for the desired rinse time. The manual mode of operation is recommended for heavily soiled utensils.

The machine is equipped with a door interlock switch. When the doors are open, the control circuit is interrupted and the machine will not operate. If a cycle is interrupted before completion, pushing the START button will begin the entire wash/rinse cycle over again.

When the wash and rinse cycles are finished, raise the counterbalanced doors, remove the clean utensils, slide in another rack, and close the doors.

Wash water in the utensil washer should be changed after each peak period.

Strainers should be emptied and rinsed before they fill up with food soils. Plugged strainers interfere with the return of the wash water to the pump, contribute to foaming, and starve out the pump spray action, creating poor results and high detergent costs.

MAINTENANCE

WARNING: DISCONNECT ELECTRICAL POWER SUPPLY AND PLACE A TAG AT THE DISCONNECT SWITCH INDICATING THE CIRCUIT IS BEING WORKED ON BEFORE BEGINNING ANY MAINTENANCE PROCEDURE.

MOTOR

The motor has sealed bearings and, therefore, requires no lubrication maintenance.

WASH ARMS

Both wash arms and the lower rinse arm (Fig's. 4 & 5) should turn freely and continue turning for a few seconds after being whirled by hand. To check, **DISCONNECT ELECTRICAL POWER SUPPLY,** rotate arms, and remove any obstructions causing improper operation.

If the strainers are not properly in place, obstructions (such as food particles) may clog the wash arm nozzles.

CLEANING

It is recommended that the machine be thoroughly cleaned at the end of each working shift or at least daily.

DISCONNECT ELECTRICAL POWER SUPPLY to the unit.

Turn TANK HEAT switch to OFF.

Open machine doors.

Clean off tables into the utensil washer.

Drain the machine by turning the DRAIN VALVE HAND KNOB (see Fig. 2) counterclockwise to the OPEN position.

Remove and empty the strainers. Wash and rinse them thoroughly.

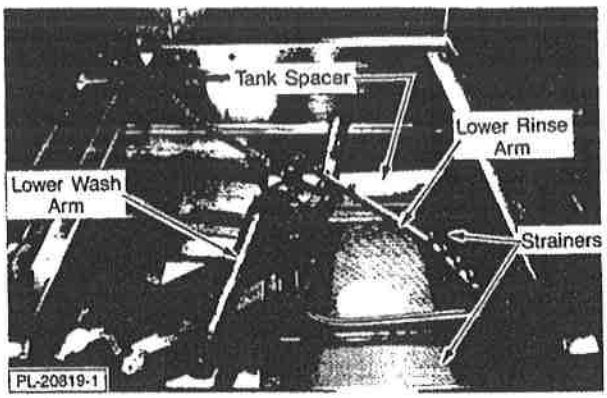

Fig. 4

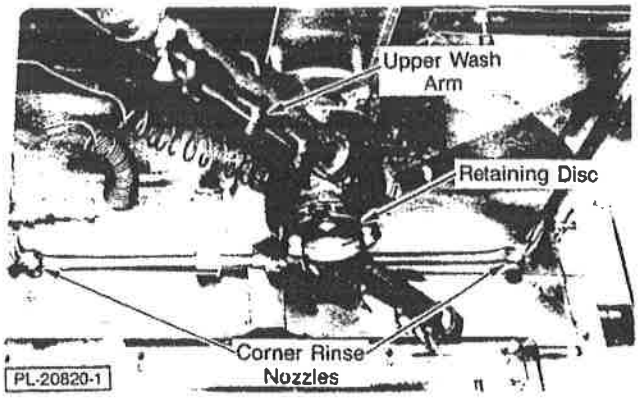

Fig. 5

Check wash arm and rinse arm nozzles (Fig's. 4 & 5) to make sure they are free of any lime and solids. The wash arms are easily removed for cleaning.

Lift lower rinse arm off the rinse pin (Fig. 4). Inspect sprayers to be sure orifices are clean and clear of scale.

Lift off lower wash arm (Fig. 4). If sprayers are clogged with debris, remove the end cap, push the debris clogging the nozzle back into the arm and rinse out the arm.

Unscrew the upper wash arm retaining disc (Fig. 5) and remove the arm, being careful not to drop it. Follow the same cleaning procedure as for the lower wash arm.

Check the four stationary corner rinse nozzles at the top of the machine to make sure they are free of lime and solids.

Thoroughly cleanse and flush the utensil washer interior, including the insides of the doors.

Replace the wash and rinse arms. Spin each wash arm and the rinse arm to be sure they rotate freely and are free of any obstructions.

Replace the strainers.

Wash the exterior of the machine with a clean damp cloth. Dry with a soft clean cloth.

Leave the machine doors open to allow the interior to dry and air out.

Leave the drain valve open until ready to fill for next use.

TROUBLESHOOTING

This section provides simple operator-oriented troubleshooting tips. Should you encounter any of the symptoms listed in this section, check the possible causes — this might eliminate the need for a service call. If a symptom persists after the possible causes have been checked, contact your local Service Office.

SYMPTOM — No machine operation

POSSIBLE CAUSE:

1. Blown fuse or tripped circuit breaker at power supply.
2. Check tank water level.
3. Doors open.

SYMPTOM — No wash tank heat

POSSIBLE CAUSE:

1. The machine is equipped with a low water safety device which shuts off heat if the water level drops. Check for proper water level.
2. Circuit breaker to machine tripped.

SYMPTOM — No or slow fill

POSSIBLE CAUSE:

1. Circuit breaker off.
2. Doors open.
3. Drain valve open.
4. Dirty line strainer causing reduced water flow. Turn off water supply remove strainer cap, withdraw and clean screen. Reassemble.

SYMPTOM — Tank water leaking

POSSIBLE CAUSE:

1. Check drain for possible obstructions.

INFRARED SECTION ADDENDUM

INSTALLATION INSTRUCTIONS

1. Set the machine in place.

2. Level the machine from side to side, and front to back.
   a. Place a level on turned out lip or tank.
   b. Adjust level of machine by screwing adjustable feet in or out as necessary.

3. Dish tables can now be set in place.
   a. The dish table(s) lip or turndown MUST be sealed with silicone or similar sealing compound. This compound must be applied so that it is compressed between the table lip and the machine tank. Be generous with this compound, this is a vital part of the installation to prevent leaks.

   b. The dish table lip must be tightly secured to the vertical edge of the machine tank. This is to allow maximum area for clearance. If the tables interfere with any mechanical parts, it will cause premature wear of the machine and will NOT be covered under the machine warranty.

PLUMBING CONNECTIONS

1. Make all plumbing connections as indicated by the tags fastened to the machine connections points.

NOTE: Make as many clean outs as possible in the drain line using tee's with pipe plugs in each tee instead of elbows, as it is very important to keep the lines cleaned out.

COMPLY WITH ALL LOCAL PLUMBING CODES.

ELECTRICAL CONNECTIONS

1. Make all electrical connections as indicated on the tags fastened to the outlets on the machine. All electrical inter-connecting is done on the machine at the factory.

This ware washing unit has been thoroughly tested under actual operating conditions with hot water, steam (when used), gas (when used), and the electrical, all working properly. When the unit has been reassembled properly and all systems connected, one of the most important things to remember is the FINAL ELECTRICAL CONNECTIONS to the main power supply. When connecting it to a single or three phase system, and when the electrician turns on the equipment for the first time, the electrician should check to see that the motors are running in the proper direction. If not, then the electrician should switch two of the leads, re-check rotation, secure connections making sure they are TIGHT AND INSULATED. The various pump units, valve circuits, etc. have all been phased out and checked out at the factory and should need no attention.

COMPLY WITH ALL LOCAL ELECTRICAL CODES.

INFRARED GAS HEAT CONTROL SYSTEMS

1. The infrared gas tank heat option on your machines will include a RESET button on the main electrical control box or panel. This feature is on the infrared machines only. The purpose of the RESET is to "stage" the control circuit for operation. In the case of a power outage or interruption, the control is locked out and ***will not operate*** until the circuit is reset by depressing the RESET button. This is a safety feature, and must not be bypassed.

Note: All of the infrared gas heated machines use a 120v control circuit regardless of the voltage of the machine voltage.

ALWAYS DISCONNECT OR TURN MAIN POWER SUPPLY OFF TO MACHINE BEFORE PERFORMING ANY MAINTENANCE OR SERVICE ON YOUR STERO EQUIPMENT.

INFRARED GAS VENTING INSTRUCTIONS

Your Stero dishwasher equipped with infrared gas tank heat will be supplied from the factory with a stainless steel exhausting system which terminates approximately 5 1/2" above the hood of the dishwasher, always in the rear of the machine. Since your Stero dishwasher with infrared gas tank heat is not intended to be directly connected to a ventilation system, an air gap must be provided. Do not make a sealed connection to the machine exhaust stack system. Refer to Stero drawing no. C20-1384 for factory recommended venting. Also, always refer to the National Fuel Gas Code book for venting requirements.

All venting must be made to the atmosphere.

COMPLY WITH ALL LOCAL VENTING CODES.

ADJUSTMENTS AND TESTS

1. Water and steam lines must be bled before final connection to the machine in order to remove any soil and dirt which may have accumulated.

2. When steam heat exchanger is supplied, the trap on same must be bled.

3. When infrared gas heat exchanger is supplied, you must make sure that you have sufficient gas pressure in the lines for proper operation. Natural gas manifold pressure must be 3" water column. LP gas must be 8" water column. Measure the manifold pressure at the 1/8" NPT pressure taps on the gas valves with a manometer.

4. Check inlet and outlet water temperatures to meet the following requirements, in order to assure satisfactory operation.

cold water - inlet line to fill valve of scrapper tank, and for cold water aquastat when supplied.
140°F - inlet line to fill valve of wash tank.
140°F - inlet line to heat exchanger (when supplied).
180°F - outlet from heat exchanger (when supplied).
180°F - final rinse measured at the dish.
180°F - inlet to power wash and power rinse fill valve (when supplied)

5. The motor(s), heat exchanger(s), gas regulator(s), orifice(s), and all other adjustable parts are connected and set at the factory and should need no further adjustments.

CONVEYOR MACHINE OPERATING INSTRUCTIONS

1. Close all drain valves, install curtains, strainer pans, and close all doors. The door safety switches will prevent the machine from operating with the doors open.

2. Turn on the circuit breakers.

3. Turn SAFETY switch to the ON position.

4. Depress the RESET button (if equipped with the infrared gas tank heat option), this will stage the control circuit.

Note: If there is an power outage or an interruption to the power supply, the control is manually locked out and *will not operate* until the circuit is reset by depressing the RESET button. This is a safety feature, and must not be bypassed.

Operating instructions continued

5. Turn valve on at each gas valve.

6. Push the FILL button. The light will illuminate until all of the tanks fill to their proper level with 140°F - 150°F water.
6a. If your machine is not equipped with automatic fill, manually open the fill valves until the water reaches the overflow level, then close the valves.

7. Push the BOOSTER button (if equipped), and the light will illuminate.

8. Push the TANK HEAT button. The light will illuminate.

Note: Tank heat will not operate until all of the tanks are filled. Wait a sufficient amount of time to let the tanks reach the desired operating temperatures.

9. After the tanks are heated to the proper operating temperatures, push the START button (if equipped). Pumps and conveyor drive will operate. If your machine is equipped with automatic start, the start up of the machine is activated by placing a rack into the load end of the machine. The machine will stop automatically when the shut down timers pre-set time expires. The time is reset when another dish rack is inserted.

10. When the dish rack reaches the final rinse, it will trip the final rinse lever and the final rinse will spray sanitizing water over the ware.

11. The temperature gauges measure the temperature of water flowing through the manifolds. The pumps must be operating before a valid reading can be obtained. Verify that temperature readings comply with the ranges on the gauges.

12. The final rinse flow pressure should be adjusted to 20 psi for correct rinse flow over the ware.

13. An optional table limit switch will stop the conveyor drive and pump motors when a dish rack approaches the end of the clean dish table.

14. Turn the TANK HEAT switch(es) off before draining the tanks.

15. Turn the SAFETY switch off at the end of the operating period, or before cleaning or servicing the dishwasher.

16. Clean the machine in accordance with the daily maintenance procedures. Remember, *you cannot get clean, sanitized ware from a dirty machine!*

PREVENTIVE MAINTENANCE

It is surprising how many future repairs will be prevented by completing regular maintenance.

1. Pump motor(s): All of the pump motors are fitted with grease sealed ball bearings, and do not require grease or oiling for the life of the motor(s).

2. Gear box: The motor gear unit also has sealed bearings and does not require grease or oiling for the life of the motor. However, an inspection of the oil level in the gear box should be made at least once a year. We recommend a good brand of SAE90 gear oil be used.

3. Line strainers: Hot and cold water lines to the machine are equipped with line strainers, and are easily recognized. The are located close to the solenoid valves. Before the final rinse connection is made, these lines should be blown out so as to clear out any scale or sediments from lodging in the equipment which they are connected to. As it becomes necessary to clean the strainers, remove the plug at the bottom of the strainers, clean, and reinstall.

Preventive maintenance continued.

4. Conveyor system: On the drive mechanism which moves the conveyor bar(s), all moving parts should be regularly greased with a good multi purpose lithium grease, and/or the use of a good lubricating oil such as WD-40 is recommended on all moving parts of the machine to aid in the life of the machine.

5. Electrical switches: Some of the switches such as the TANK HEAT, FILL, BOOSTER, use lights internal to the switches. If the bulb fails, immediate replacement is recommended. The face of the switch unscrews for easy replacement of the bulbs. These switches are illuminated for the purpose of safe operation of the equipment.

6. Infrared burners and system: Even though the system is protected by the frame of the machine, and sheet metal surrounding the blower(s), periodical inspection of components for damage or blockage is recommended. The blower intake area should be checked for obstructions and wiped free of dirts and oils on a regular basis.

7. Rinse savers: The rinse saver pan located in the final rinse area of your dishwasher should be checked regularly for obstructions in the pipes, and proper adjustment of the flapper to allow for flow of final rinse water not to exceed 2 gallons per minute in the wash tank(s).

8. Wash arms: All wash arms should be checked regularly for obstructions and securely kept in place with all end caps attached.

10. Drain valve(s): All of the drain valves should be checked for obstructions and proper operation. A leaking seat on a drain valve can cost you in unnecessary water, soap, and energy consumption.

11. Curtains: All of the curtains should cleaned regularly and checked for wear and tear. Replace if necessary.

9. Leaks: All leaks should be fixed whenever they occur.

DAILY MAINTENANCE

Cleanliness is one of the most important things in any scullery. Clean equipment prevents repair problems, and most important of all, it gives you *clean, sanitary ware.* This is best accomplished by establishing a daily procedure, and by selecting a supervisor, if possible, to see that it is properly done.

At the end of each shift or washing period, the following steps will insure proper results from your Stero dishwasher.

1. SHUT OFF ALL POWER TO THE MACHINE BEFORE CLEANING OR SERVICING. If the machine is steam heated, turn off the steam supply to the machine. If gas heated, turn off the gas supply to the machine.

2. Drain the machine.

3. Open all doors and remove wash arms, scrap screens, and curtains. The wash arm end caps should be removed and the wash arms should now be cleaned in a sink, or flushed out with a hose.

4. Wash, scrub, and rinse down the inside of the machine. All refuse in the bottom of the tanks should be flushed down the drain(s). Remove any foreign matter that might remain between the drain poppet and the seat of the drain(s).

5. Clean the exterior of the machine with a good, acceptable stainless steel cleaner. Lemon oil may be used.

6. The floor around the base of the machine and under the table should also be cleaned to prevent soil accumulation.

7. All interior components removed from the machine should now be reinstalled. Leave all the doors open to allow the interior of the machine to air dry.

Always remember, a clean machine is a well maintained machine. You can't get clean, sanitized ware from a dirty machine!

ALL DIMENSIONS ARE IN DECIMAL INCHES UNLESS STATED OTHERWISE.
BREAK ALL SHARP EDGES.

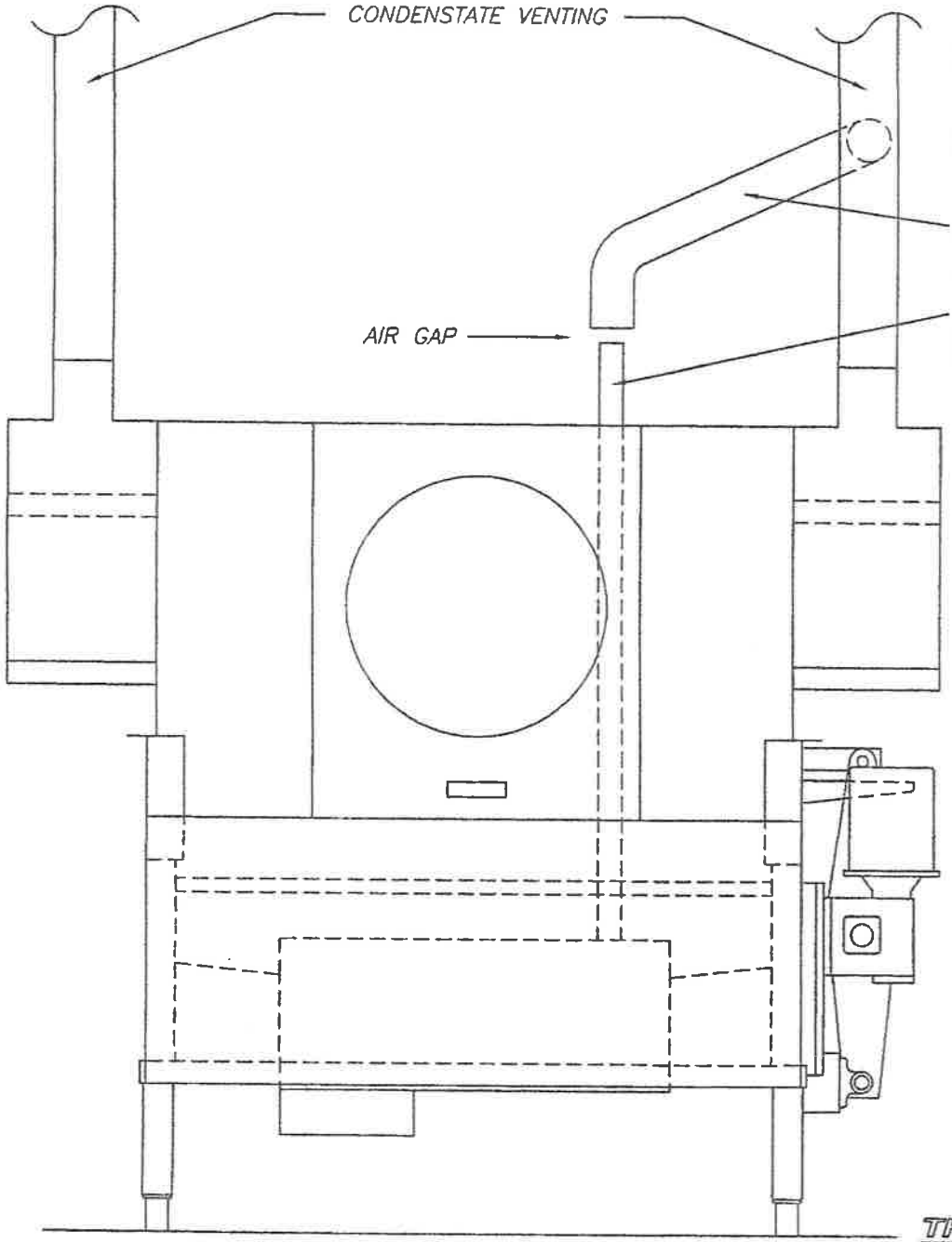

NOTE: ALL FABRICATION BY OTHERS FOR VENTING MUST MEET OR EXCEED ALL LOCAL CODES. AS A BY PRODUCT OF OUR VERY HIGH EFFICIENCIES, SOME CONDENSATION IS PRESENT IN THE EXHAUST. ALL STERO COMPONENTS FOR EXHAUSTING THE I.R. HEATERS ARE FABRICATED OUT OF T304 18–8 STAINLESS STEEL.

INTEGRAL DRAFT HOODS ARE NOT RECOMMENDED FOR OUR SYSTEMS BECAUSE OF THE LOW EXHAUST TEMPERATURES AND THE LOW STACK DRAFT.

FACTORY RECOMMENDED EXHAUST
TIE–IN TO CONDENSATE VENTING – INDIRECT CONNECTION.

COMPLY WITH ALL LOCAL CODES AND FABRICATING REQUIREMENTS.

TYPICAL 1 5/8" DIAMETER STAINLESS STEEL EXHAUST STACK.

TYPICAL FLUE TEMPERATURES – 125–145° F
TYPICAL FLUE DRAFT – +.1" W.C.

TYPICAL SINGLE BURNER CONVEYOR DISHW/ ER.

THE STERO COMPANY 3200 LAKEVILLE HIGHWAY PETALUMA, CALIFORNIA 94954 PHONE: (707)762–0071 FAX: (707)762–5036

TITLE: RECOMMENDED VENTING, I.R. GAS DISHWASHER			
MATERIAL: NOTED		DIMENSION TOLERANCE:	.± 1/64" .DEC. ±.005"
DATE: 5/27/1999		SCALE: 1=12	'T #
DRAWN BY: LN		SHEET # 1 OF 1	AW. # A20–1384

FINAL RINSE BOOSTER

The final rinse booster supplied with the equipment is sized so as to supply adequate gallonage of 180°F to 195°F water per minute to the final rinse. To do this it should have an incoming water supply of 140°F of at least 20 to 25 psi flow pressure. If the booster is steam heated , it should also have an adequate steam supply of at least 15 to 40 psi. Water and steam lines to the booster should be sized as indicated on the drawings or called for in the specification. The electrical power supply to the booster should be of the required voltage and phasing as called for in the drawings or specifications.

The temperature in the final rinse is controlled by a **FENWALL** thermostat unit. If it becomes necessary to adjust the final rinse temperature, refer to the thermostat section for the proper procedure. The tank heat in the power wash and power rinse tanks are also controlled by a thermostat. If it becomes necessary to adjust these temperatures, please refer to the thermostat section which contains the needed information as how to adjust them.

INFRARED BURNER SYSTEM AND OPERATING SEQUENCE

Your Stero dishwasher equipped with the infrared gas heaters is based on a simple operating premise and parts, when coupled together with good maintenance, will provide long reliable service. The following parts make up the "system". Refer to the exploded isometric views further on in this manual for part identification and relation to assembly.

1. Adjustable gas regulator(s).
2. Electromechanical gas valve(s).
3. Silicon carbide hot surface igniter(s).
4. Flame sensor(s).
4. Air blower(s).
5. Electromechanical air switch(es) with air line(s) connected to the blower(s).
6. Controller(s).
7. Gas lines from valves to mixing chamber(s).
8. Orifice(s).
9. Cylindrical infrared gas burner(s).
10. Stainless steel heat exchanger(s).
12. Heat recirculation box(es) and exhaust tube(s).
13. Gaskets, fastners, and brackets.

All of the components require simple tools for disassembly and reassembly and are generally straight forward. 1. The gas plumbing connections should be made with a good acceptable pipe compound to eliminate leakage. This includes the plumbing to the machine common gas line(s), the regulator(s), gas valve(s), gas line(s) from the valve to the mixing chamber(s), plumbing connection(s) to the infrared gas burner(s). Never over tighten the connections for this may cause undue breakage or premature part failures.

Your Stero dishwasher should require no initial adjustments, however, upon initial installation , servicing or replacement of parts consider the following operating sequence for proper operation. The system(s) are designed to run on both *natural, and LP gas*. All of the components will be preset at the factory. Upon part replacement or servicing, the system may need to be readjusted to meet the original factory specifications.

INSTRUCTIONS FOR FENWAL DIFFERENTIAL EXPANSION THERMOSWITCH UNITS

PRINCIPLE OF OPERATION:

The Thermoswitch Control is constructed with two silver contacts mounted on, but electrically insulated from, curved struts of low expansion coefficient. This assembly is mounted under tension or compression in a seamless drawn brass or stainless steel tube. Changes in temperature cause the shell to expand or contract, which exerts more or less tension or compression on the struts, causing the contacts to make or break.

BASIC TYPES:

The shell of the Thermoswitch Control contains information regarding electrical rating, temperature range, and contact action. Should the shell of the unit be inserted, immersed, or otherwise obscured in such a manner as to make reference to this impossible, general operating characteristics may be quickly determined if the catalogue number of the device is known. If the 5th digit of the catalog number is even (or zero), the contacts close on the decreasing temperatures. If the 5th digit of the catalog number is odd, the contacts close on increasing temperatures. Reference to the fourth digit will quickly determine whether the unit is tension or compression operated. Should this digit be "2" or "7", the unit is compression operated, should it be other than "2" or "7", the unit is tension operated. Tension operated units may be subjected to momentary temperature exposure of 100°F above their set point. They also may be subjected to any temperature below therir set point without danger. Tension operated Fenwal Thermoswitch units may be set below 0°F but compression operated units are recommended if rapid temperature changes in excess of 100°F or extreme temperature overshoots are to be encountered. Fenwal compression operated units may be exposed to a temperature of 100°F indefinitely, and to temperatures 400°F above their set temperatures for short periods of time. The limits of exposure being subject to many application variations. When in doubt, the factory should be consulted.

INSTALLATION & ADJUSTMENT TIPS

THE HEX HEAD OR THREADED TYPE can be installed like any pipe fitting. Avoid applying undue torque to the unit. Torque in excess of 35 foot pounds for the standard size (5/8" dia. shell) or 70 foot pounds for the heavy duty (13/16" diam. shell) will offset the control calibration. If threaded units are installed in a pipe tee, the tee should be large enough to allow adequate circulation of the fluid around the temperature sensitive section of unit.

DON'TS

Do not handle the unit with pliers or force it into position either by hand or with tools, or apply excessive torque in tightening threaded units. Do not subject unit to deformation of the shell. Do not thermally shield unit from medium it is to control.

TESTING & ADJUSTING

The arrow on the head of THERMOSWITCH units indicated direction in which adjusting screw should be turned to increase the temperature setting. Each full turn of the adjusting screw will change the temperature the approximate number of degrees indicated by the table.

After the THERMOSWITCH unit has been installed, final adjustment can be made by allowing the unit to operate for several cycles to permit the controlled system to stabilize and then adjust to desired temperatures. The system should then be cooled to ambient temperature, reheated and stabilized to check the setting.

Where extremely accurate temperature control is desired, several read-adjustments may be necessary to stabilize the THERMOSWITCH Control after which the adjustment will be maintained.

CAUTION

DO NOT turn the adjusting screw in any further than is necessary for operation. Do not remove adjusting screw from unit as this voids the Standard Guarantee. Incorrect replacement or over adjustment will permanently damage the element assembly.

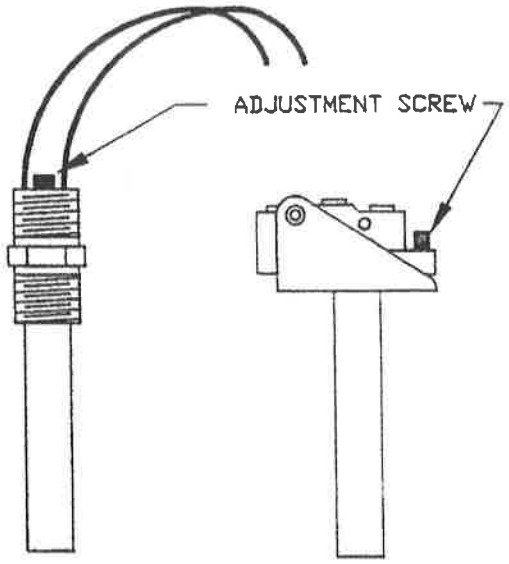

TURN ADJUSTMENT SCREW CLOCKWISE TO RAISE TEMPERATURE

UTENSIL WASHER

TABLE OF CONTENTS

DESCRIPTION	PAGE
STRUCTURAL COMPONENTS	
FRAME	1
TANK	3
HOOD	5
DOOR ASSEMBLY	7
TRACKS	9
STRAINER PANS	11
RACKS	13
PUMPING SYSTEMS	
3 HP PUMP ASSEMBLY	15
MOTOR ASSEMBLY	17
SPRAYING SYSTEMS	
WASH	19
RINSE	21
HEATING COMPONENTS	
STEAM HEAT	23
ELECTRIC HEAT	25
PLUMBING COMPONENTS	
BOOSTERS	27
SPIREC ASSEMBLY	29
THRUSH ASSEMBLY	31
ELECTRIC ASSEMBLY	33
FINAL RINSE	35
COMMON PARTS	37-39

TABLE OF CONTENTS

(CONTINUED)

DESCRIPTION	PAGE
DRAIN AND OVERFLOW	41
GAUGE ASSEMBLY	43
ELECTRICAL SYSTEMS	
CONTROL BOX	45
FLOAT SWITCH	47
THERMOSTATS	49
COMMON FITTINGS	51

STRUCTURAL COMPONENTS

FRAME

TANK

HOOD

STRAINER PANS

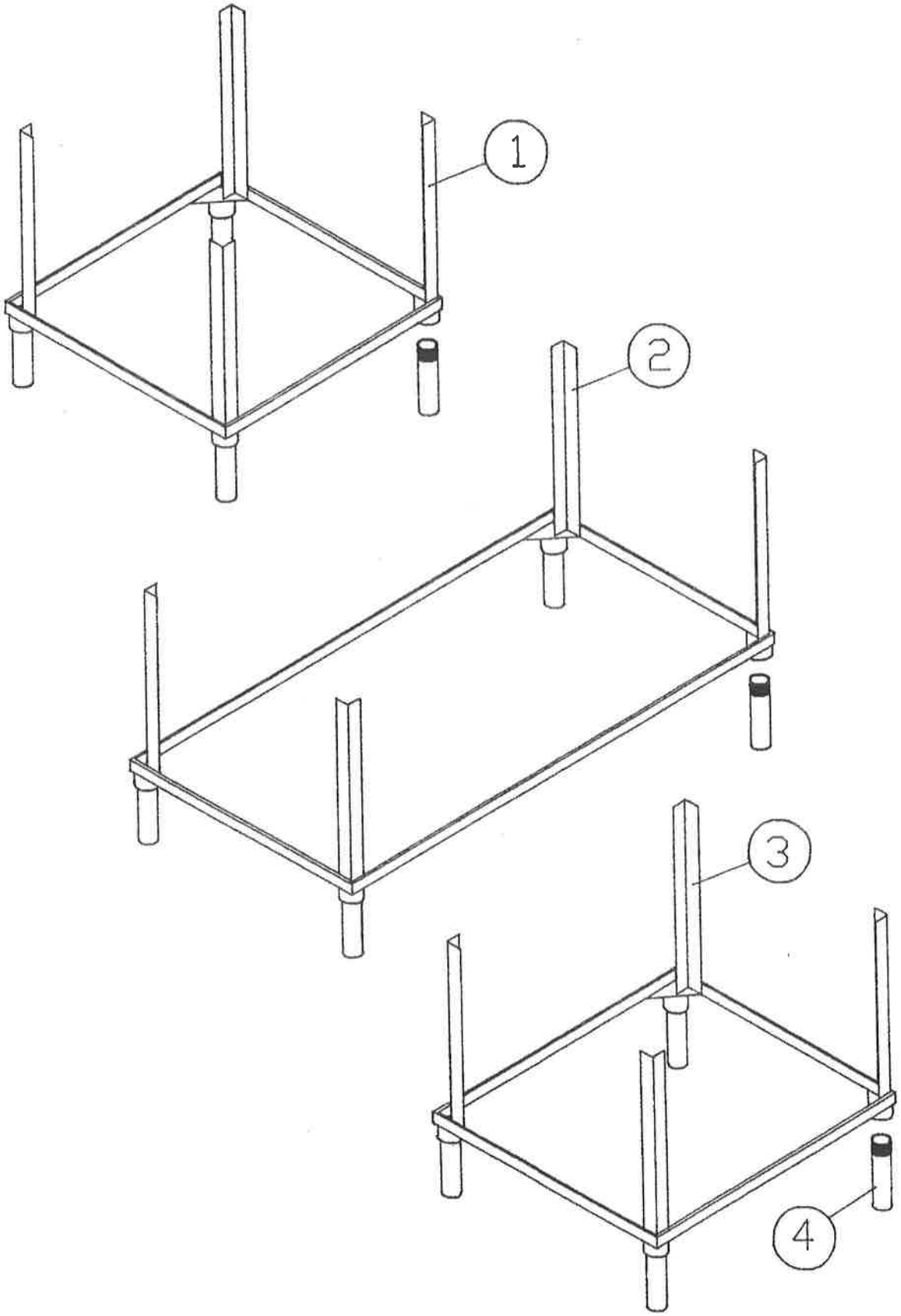
1
2
3
4

FRAMES

ITEM	DESCRIPTION	REMARKS	PART NO.
1	FRAME, STRAIGHT THRU U-31A		A10-2729
2	FRAME, STRAIGHT THRU U-31A2		A10-2761
3	FRAME, CORNER TYPE U-31AC LEFT OR RIGHT		B10-3912
4	FOOT, ADJUSTABLE S.S.		B10-3915

* TO ORDER SUPPLY MACHINE MODEL AND SERIAL NUMBER

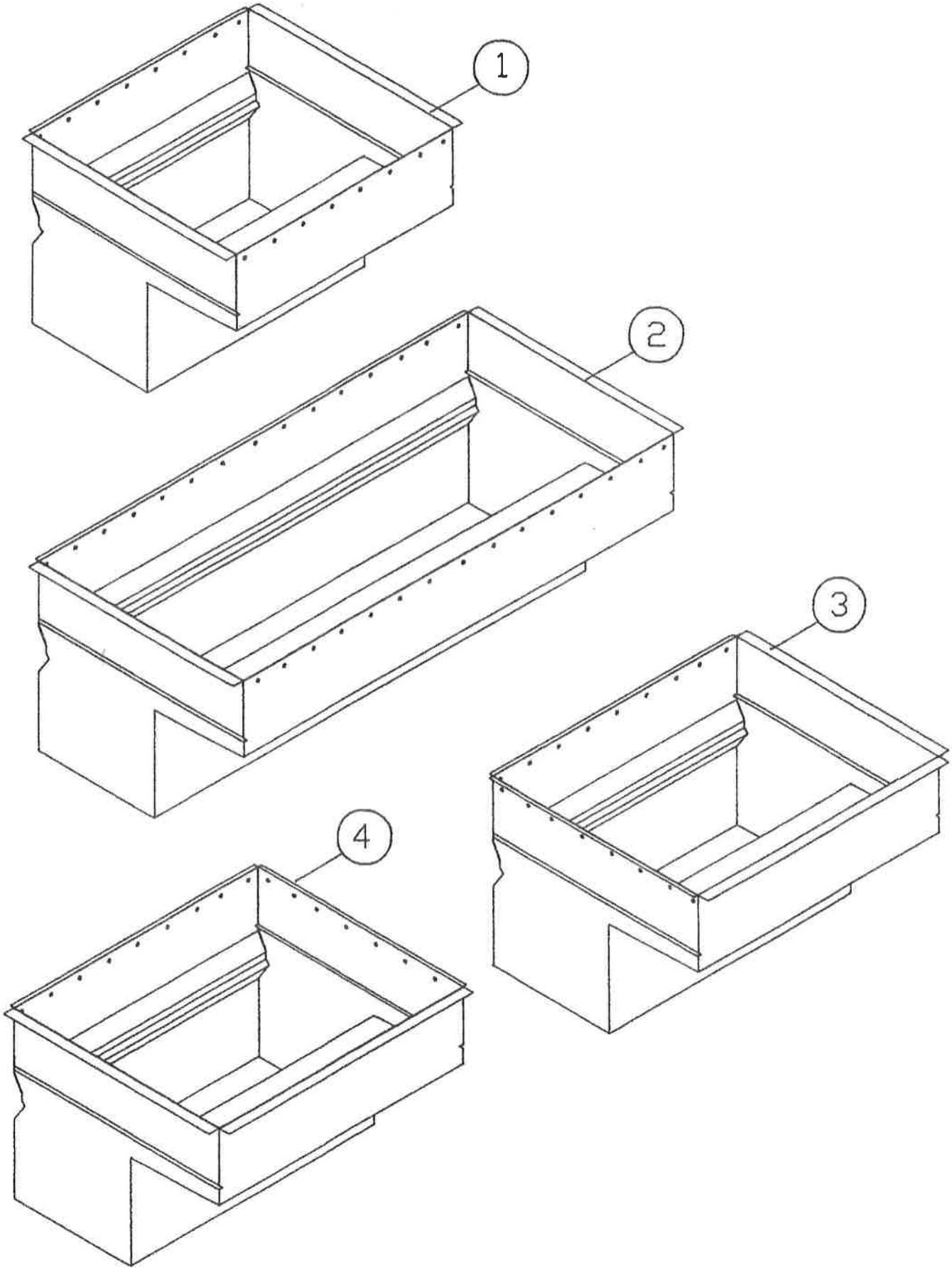
1
2
3
4

TANKS

ITEM	DESCRIPTION	REMARKS	PART NO.
1	TANK, STRAIGHT THRU U-31A		B10-2728
2	TANK, STRAIGHT THRU U-31A2		B10-2760
3	TANK, CORNER U-31AC RIGHT-LEFT	*	A10-5109
4	TANK, CORNER U-31AC LEFT-RIGHT	*	A10-5109

* TO ORDER SUPPLY MACHINE MODEL AND SERIAL NUMBER

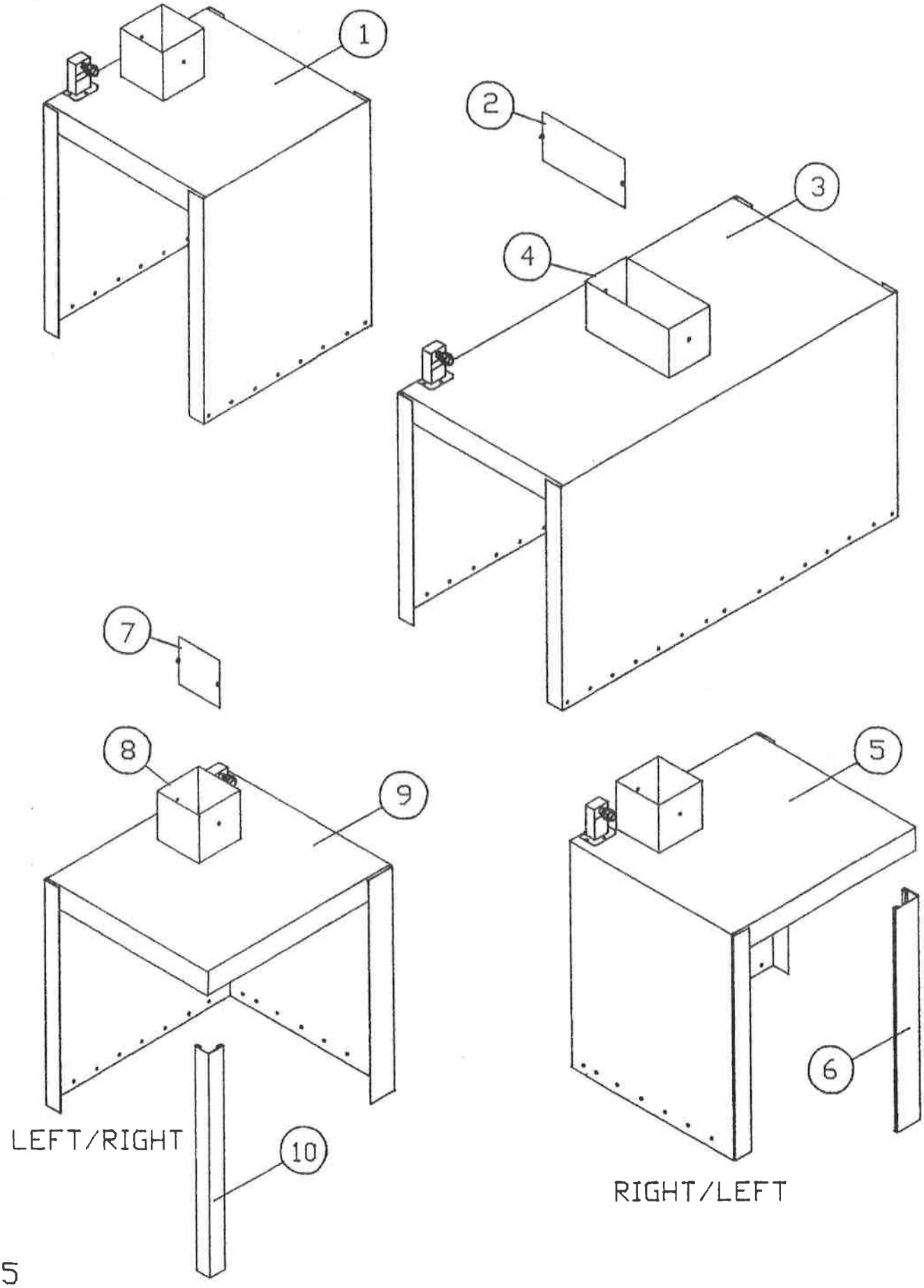
1
2
3
4
7
8
9
5
6
10
LEFT/RIGHT
RIGHT/LEFT

HOODS

ITEM	DESCRIPTION	REMARKS	PART NO.
1	STRAIGHT THRU, U-31A		B10-2726
2	VENT DAMPER U-31A2		A10-4217
3	STRAIGHT THRU U-31A2		B10-2759
4	VENT U-31A2		A10-5114
5	CORNER U-31AC RIGHT-LEFT		A10-3924
6	POST, CORNER RIGHT-LEFT		A10-3918
7	VENT DAMPER		A10-2775
8	VENT		B10-2774
9	CORNER U-31AC LEFT-RIGHT		A10-5112
10	POST, CORNER LEFT-RIGHT		A10-5113

* TO ORDER SUPPLY MACHINE MODEL AND SERIAL NUMBER

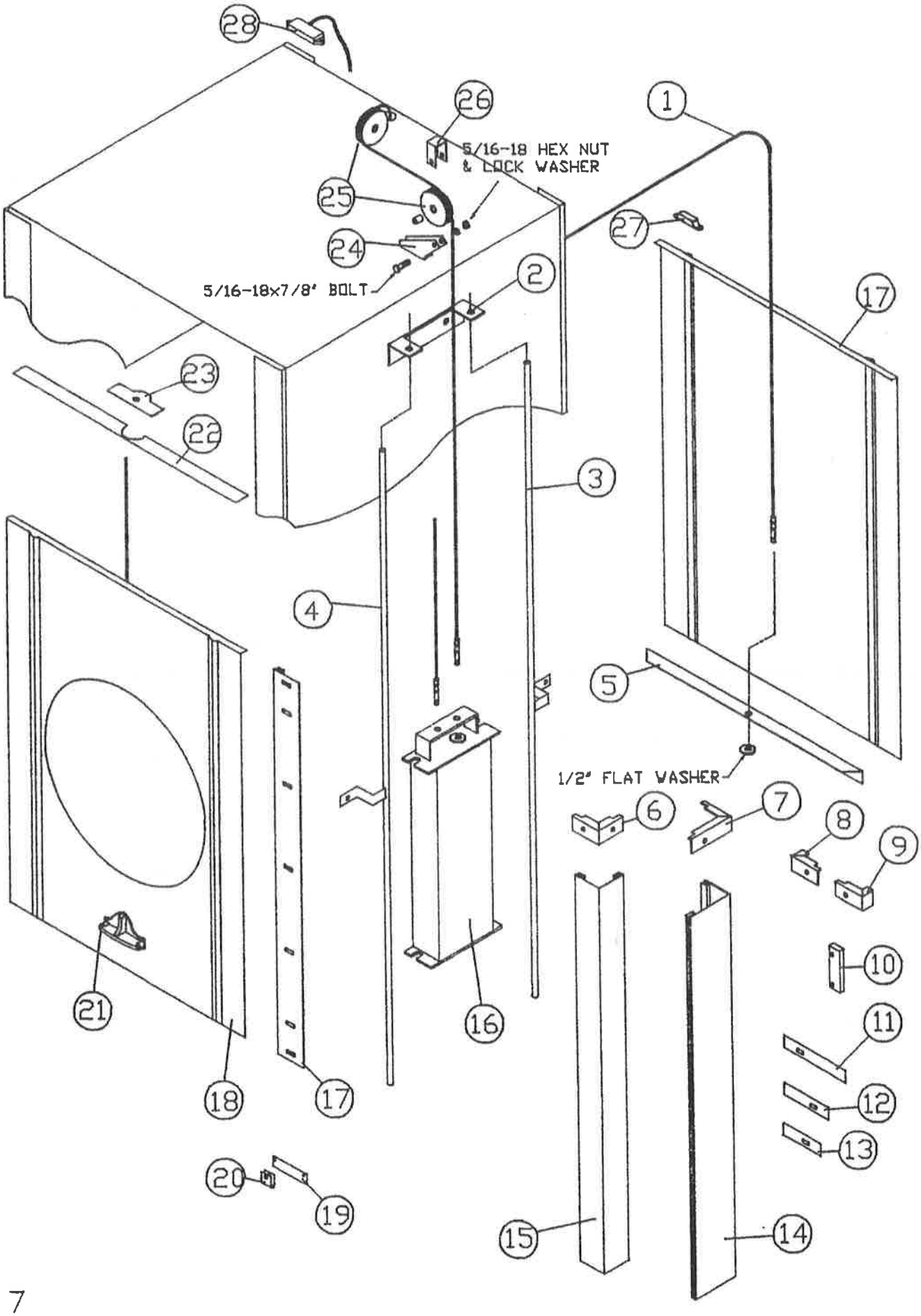
28
26
1
5/16-18 HEX NUT
& LOCK WASHER
25
27
24
2
5/16-18x7/8" BOLT
17
23
22
3
4
5
1/2" FLAT WASHER
6
7
8
9
10
21
16
11
18
17
12
13
20
19
15
14

TYPICAL DOOR ASSEMBLY

ITEM	DESCRIPTION	REMARKS	PART NO.
1	CABLE, U-31A		A10-2739
	CABLE, U-31A2		A10-2741
	CABLE, U31AC		A10-2740
2	BRACKET, ROD SUPPORT		A10-2749
3	ROD, WEIGHT GUIDE RIGHT SIDE		A10-2748
4	ROD, WEIGHT GUIDE LEFT SIDE		A10-2747
5	DOOR ANGLE		A10-2736
6	RETAINER, CORNER POST U-31AC LEFT-RIGHT		A10-5116
7	RETAINER, CORNER POST U-31AC RIGHT-LEFT		A10-3919
8	RETAINER, LEFT-REAR, RIGHT-FRONT		A10-2769
9	RETAINER, RIGHT-REAR, LEFT-FRONT		A10-2770
10	SPACER, DOOR GUIDE		A10-4215
11	TEFLON, UPPER CORNER POST (FOR #7)		A10-5120
12	TEFLON, UPPER CORNER POST (FOR #6)		A10-5121
13	TEFLON, UPPPER CORNER POST (FOR #8 & 9)		A10-2771
14	CORNER POST, U-31AC RIGHT-LEFT		A10-3918
15	CORNER POST, U-31AC LEFT-RIGH		A10-5113
16	COUNTER WEIGHT		A10-2746
17	DOOR GUIDE		A10-2727
	DOOR, SIDE ALL MODELS		A10-2734
18	DOOR, FRONT U-31AC ONLY		A10-3920
19	TEFLON, LOWER DOOR		A10-1536
20	RETAINER, TEFLON LOWER DOOR		A10-2772
21	HANDLE, DOOR		B10-1448
22	SPLASH GUARD, SIDE DOORS 25' LONG		A10-3921
	SPLASH GUARD, FRONT DOOR 27' LONG		A10-3922
23	GASKET		A10-5118
24	BRACKET, SHEAVE		A10-2743
25	SHEAVE		A66-2742
26	BRACKET, CABLE RETAINER		A10-2745
27	MAGNET ASSEMBLY		B10-4274
28	REED SWITCH ASSEMBLY		A10-4275

* TO ORDER SUPPLY MACHINE MODEL AND SERIAL NUMBER

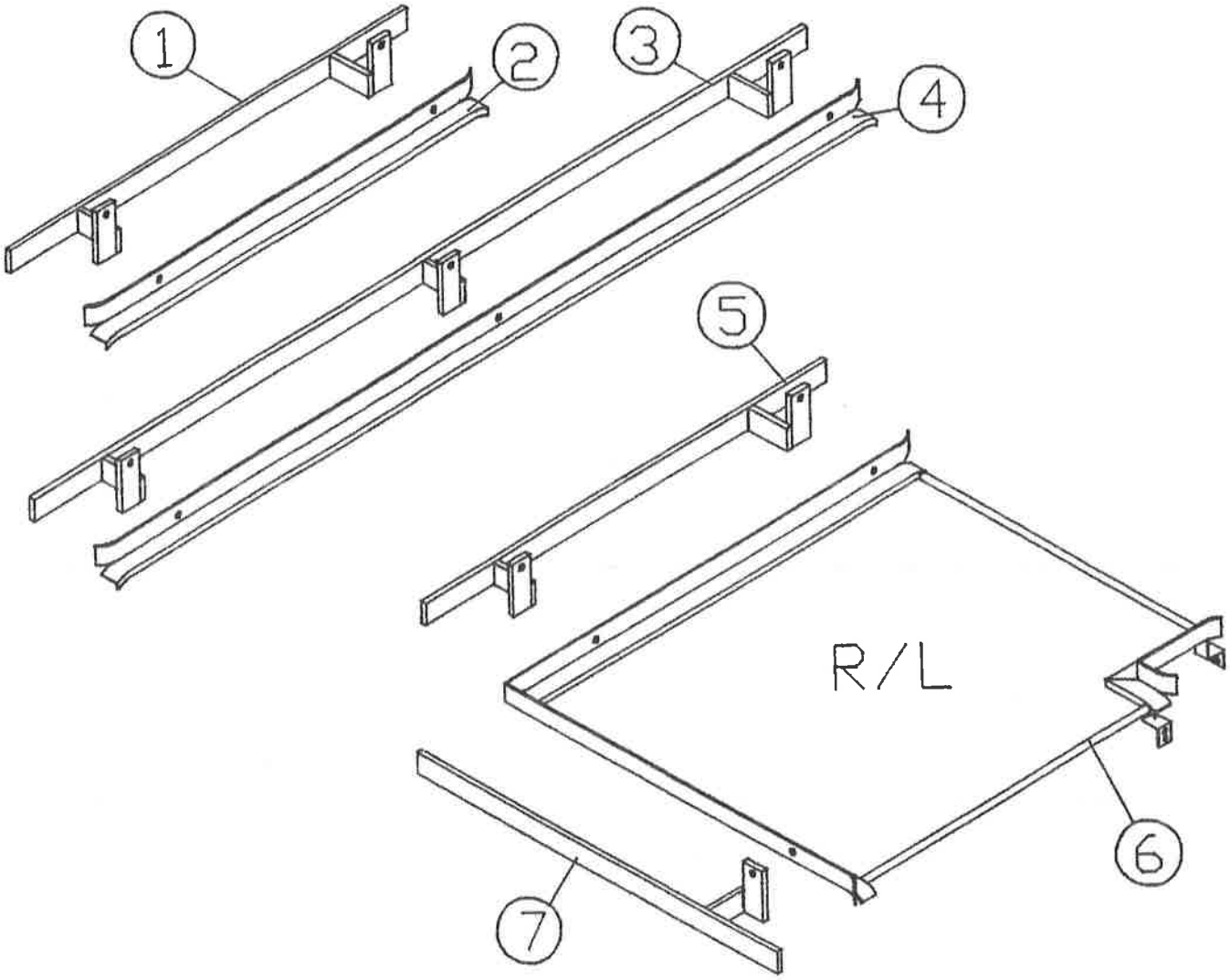
1
2
3
4
5
R/L
6
7

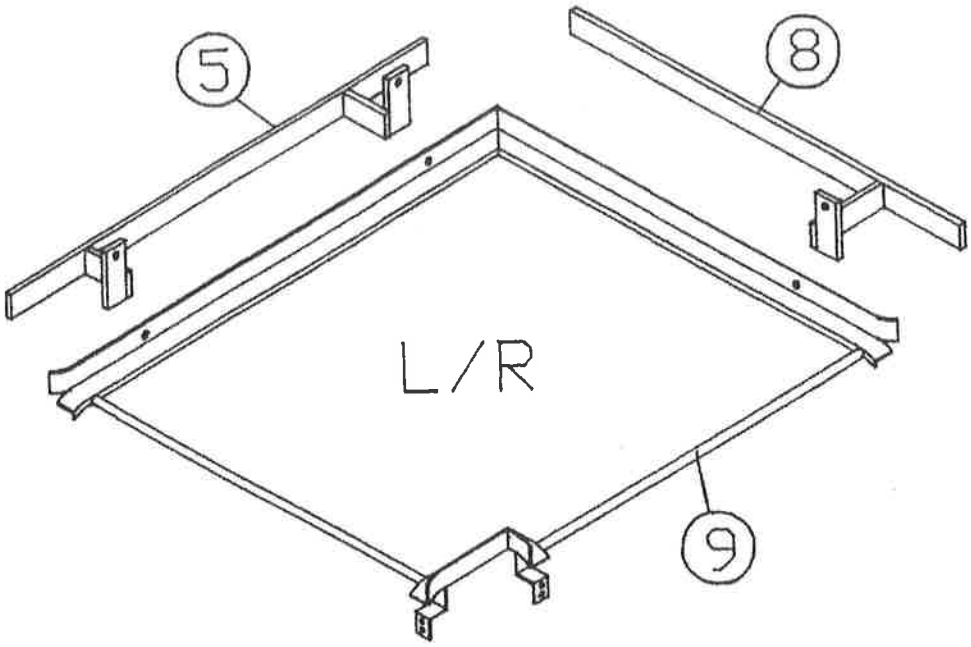
5
8
L/R
9

TRACKS AND SPACERS

ITEM	DESCRIPTION	REMARKS	PART NO.
1	TRACK SUPPORT ASSEMBLY, STRAIGHT THRU U-31A		B10-2730
2	TRACK, FRONT OR REAR U-31A		B10-2731
3	TRACK SUPPORT ASSEMBLY, STRAIGHT THRU U-31A2		B10-2761
4	TRACK, FRONT OR REAR U-31A2		B10-2762
5	TRACK SUPPORT ASSEMBLY, CORNER U-31AC RIGHT OR LEFT		*
6	TRACK ASSEMBLY CORNER U-31AC RIGHT - LEFT		*
7	TRACK SUPPORT ASSEMBLY, U-31AC RIGHT-LEFT		*
8	TRACK SUPPORT ASSEMBLY, U-31AC LEFT-RIGHT		*
9	TRACK ASSEMBLY CORNER U-31AC LEFT - RIGHT		*

* TO ORDER SUPPLY MACHINE MODEL AND SERIAL NUMBER

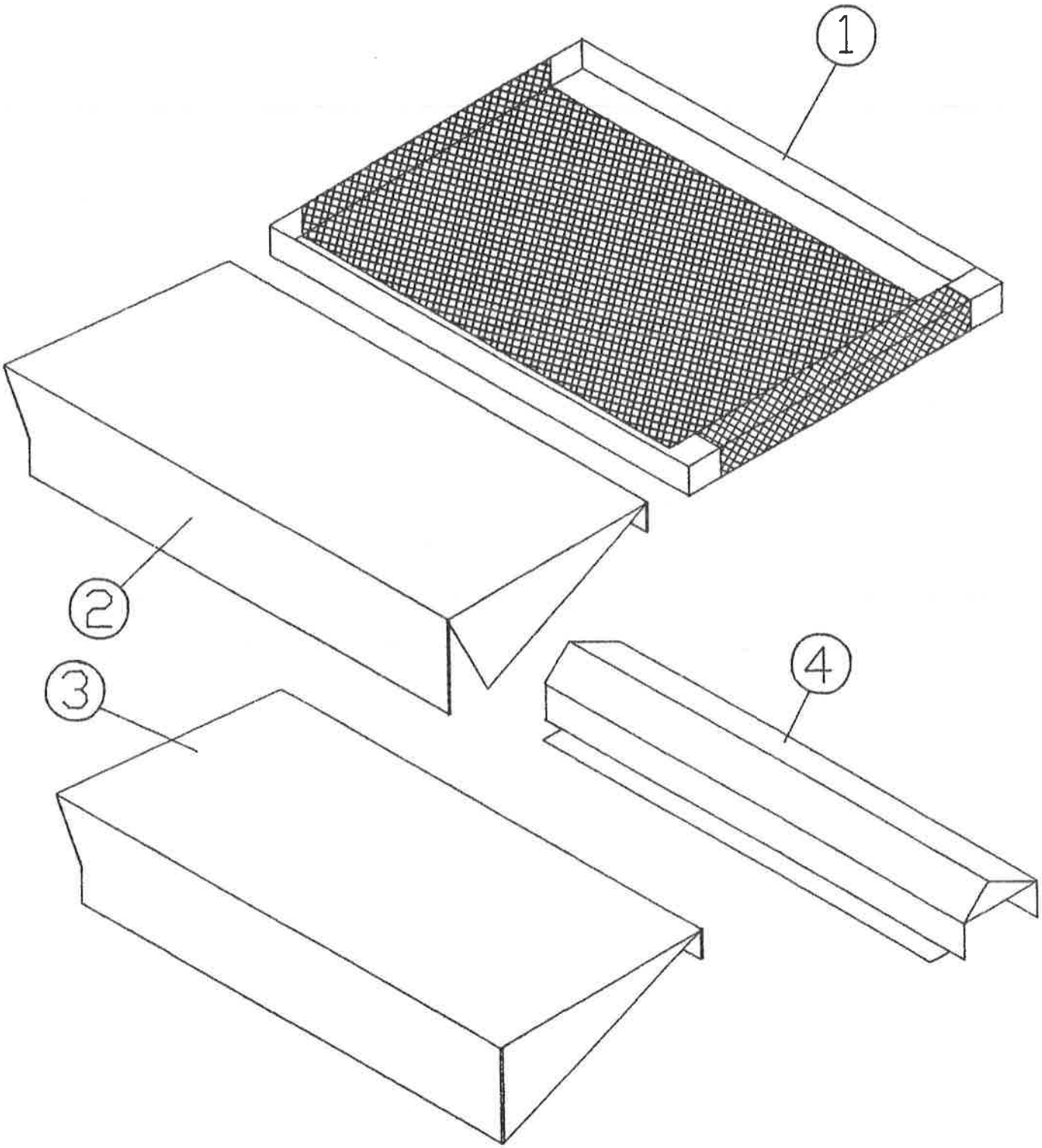
1
2
3
4

STRAINER PAN AND SPACERS

ITEM	DESCRIPTION	REMARKS	PART NO.
1	STRAINER PAN 12-3/8x16-1/2"		A10-1593
2	SPACER, U-31AC		A10-3923
3	SPACER, U-31A		A10-2773
4	SPACER, U-31A2		A10-2765

* TO ORDER SUPPLY MACHINE MODEL AND SERIAL NUMBER

RACKS – NEW 2008

UTENSIL WASHER

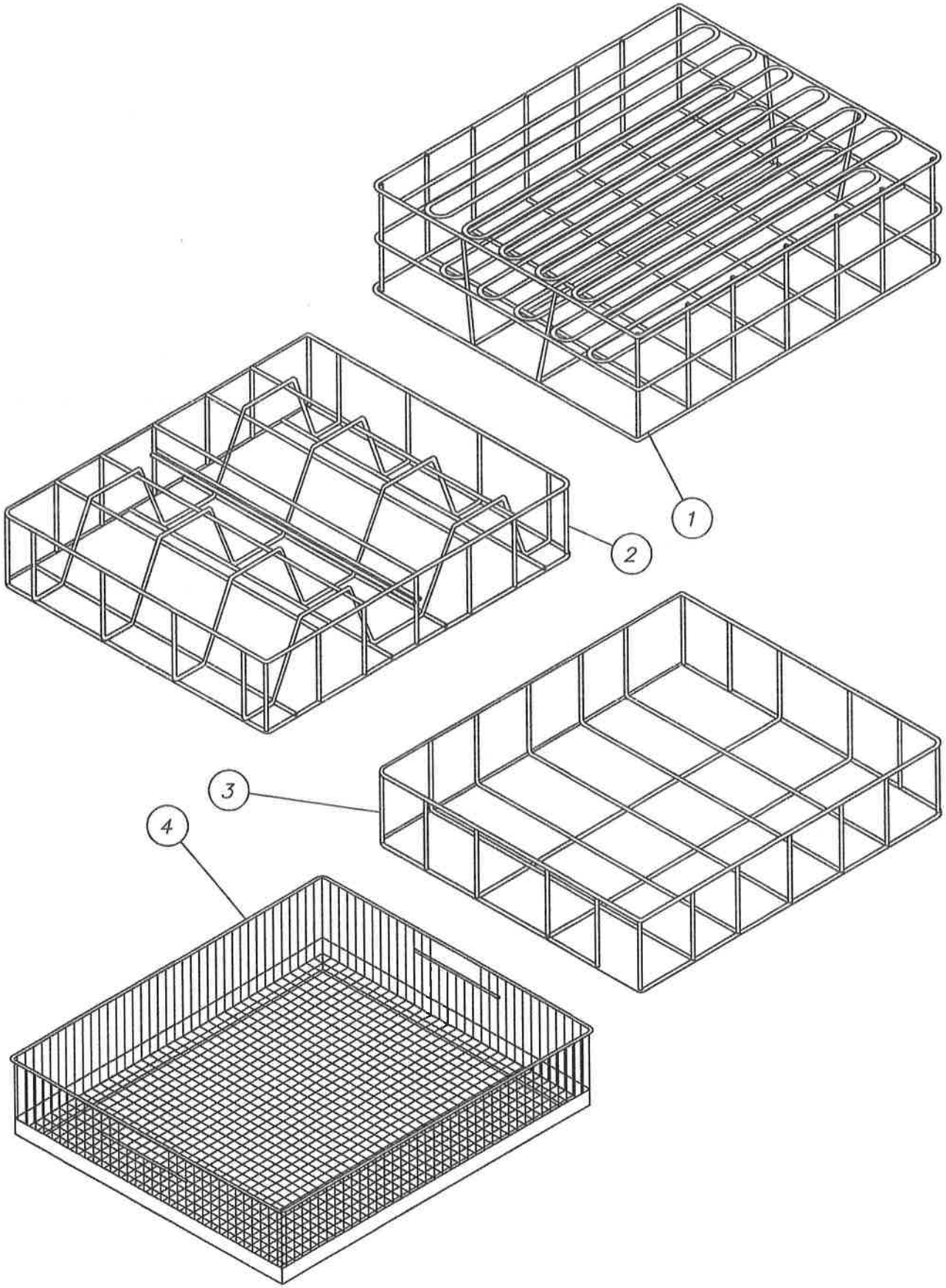

RACKS – NEW 2008

UTENSIL WASHER

ITEM	DESCRIPTION	REMARKS	REQ.	PART NO.
1	RACK, PIE TIN		1	C10–1703
2	RACK, COUNTER PAN		1	C10–1801
3	RACK, GENERAL, UTILITY		1	C10–1807
4	RACK, BASKET, UTENSIL		1	C10–2297F

* TO ORDER SUPPLY MACHINE MODEL AND SERIAL NUMBER

PUMPING SYSTEMS

3 HP PUMP ASSEMBLY

MOTOR ASSEMBLY

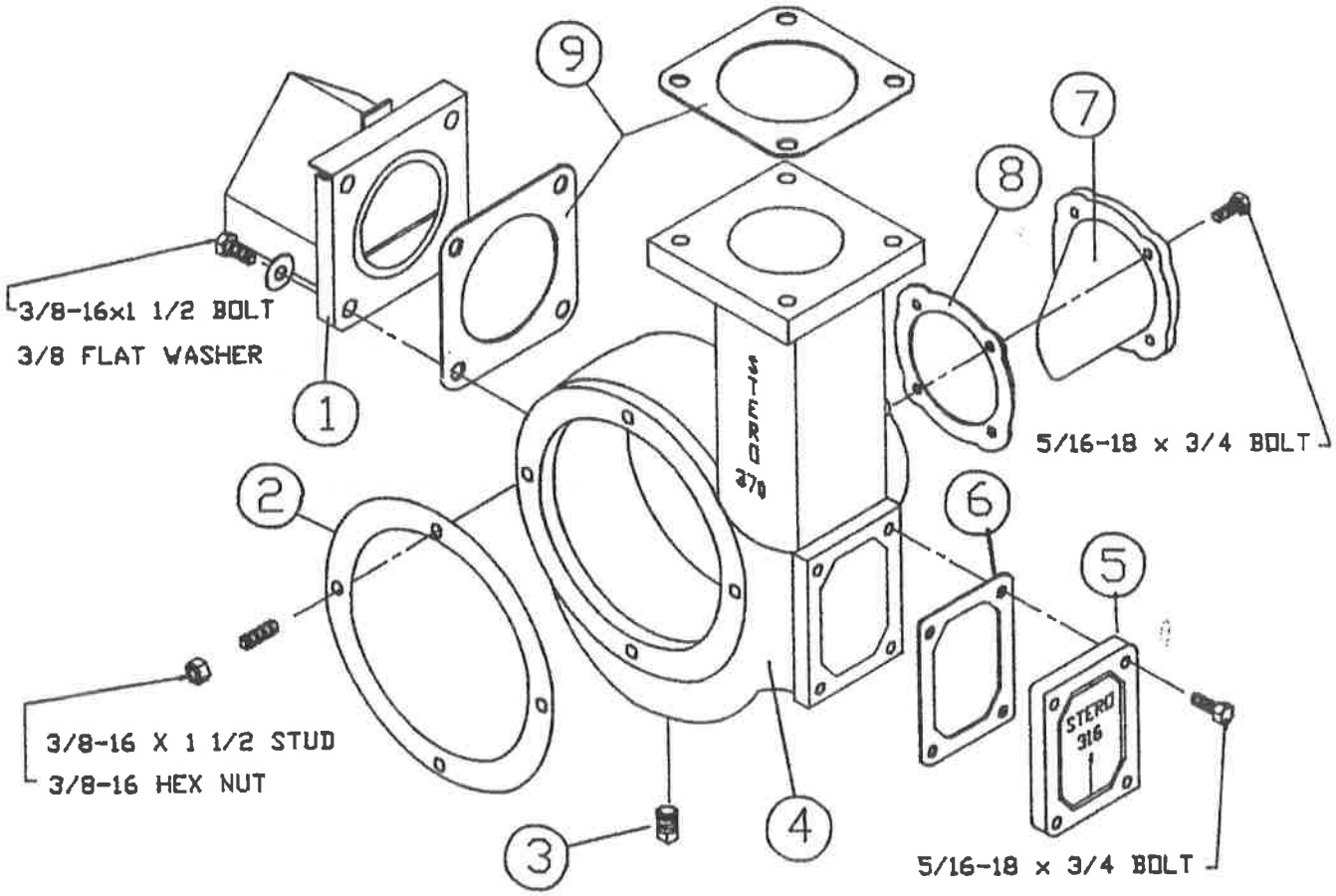
9
7
8
3/8-16x1 1/2 BOLT
3/8 FLAT WASHER
1
5/16-18 x 3/4 BOLT
2
6
5
3/8-16 X 1 1/2 STUD
3/8-16 HEX NUT
3
4
5/16-18 x 3/4 BOLT

370 PUMP ASSEMBLY

ITEM	DESCRIPTION	REMARKS	PART NO.
1	PUMP SUCTION CAGE		B10-1864
2	MOTOR TO PUMP GASKET		B57-1756
3	DRAIN PLUG		P68-1605
4	PUMP HOUSING #370		C10-1299
5	INSPECTION COVER #316		A10-2441
6	INSPECTION COVER GASKET		A57-1754
7	ROUND INSPECTION COVER #371		A10-1300
8	ROUND INSPECTION COVER GASKET		A57-1755
9	PUMP TO TANK GASKET		B57-1757
	PUMP COMPLETE WITH GASKETS AND COVERS		B10-2298

* TO ORDER SUPPLY MACHINE MODEL AND SERIAL NUMBER

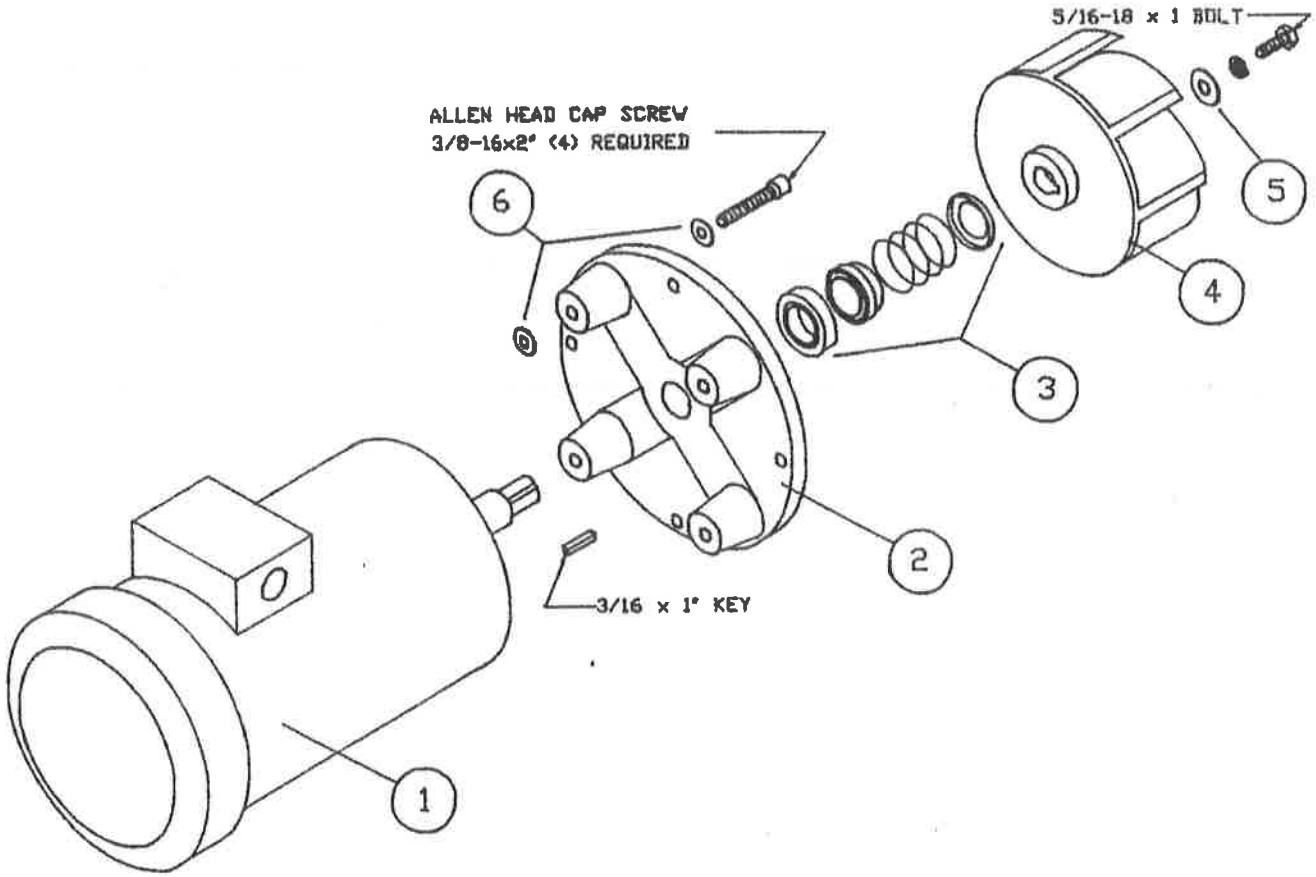
5/16-18 x 1 BOLT
ALLEN HEAD CAP SCREW
3/8-16x2" (4) REQUIRED
6
5
4
3
2
3/16 x 1" KEY
1

MOTOR ASSEMBLY

ITEM	DESCRIPTION	REMARKS	PART NO.
1	MOTOR, 3 HP 208-230/460 3 PHASE		P41-1342
2	ADAPTOR, END BELL #499		C10-1052
3	SEAL, SHAFT 1"		P57-1697
4	IMPELLER, 3 HP #372		B10-5491
5	WASHER, SPECIAL		A10-2014
6	WASHER, S.S. MOTOR FLANGE		P67-1909
	MOTOR, 3 HP ASSEMBLY 3 PHASE		B10-2180
	COMPLETE ASSEMBLY ITEMS 1 THRU 6		
	NOTE: CALL FACTORY FOR 50 CYC. MOTOR ASSEMBLY		

* TO ORDER SUPPLY MACHINE MODEL AND SERIAL NUMBER

SPRAYING SYSTEMS

WASH ASSEMBLY

RINSE ASSEMBLY

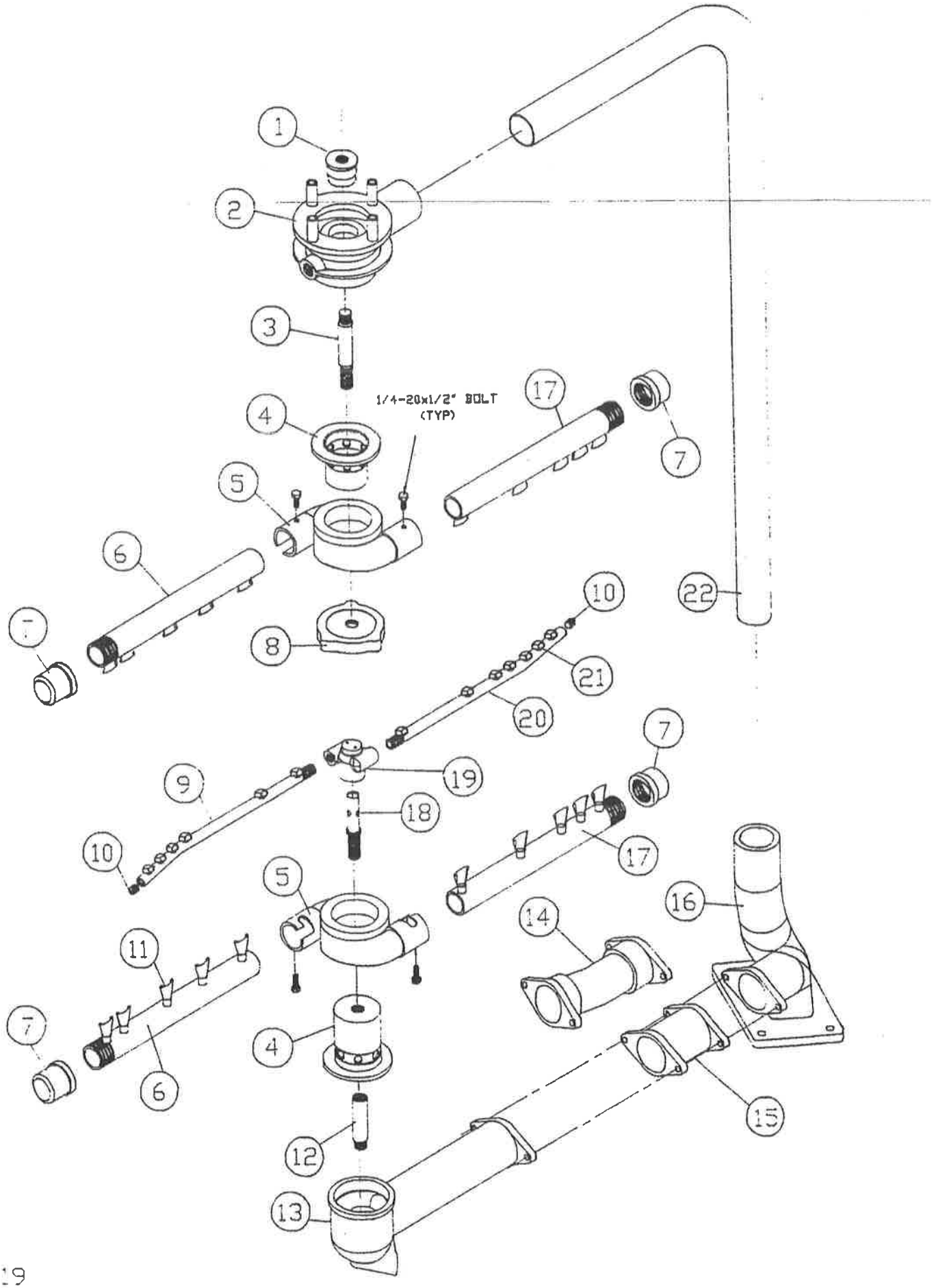
1
2
3
4
1/4-20x1/2" BOLT
(TYP)
5
6
7
8
9
10
11
12
13
14
15
16
17
18
19
20
21
22

SPRAY MANIFOLD ASSEMBLY

ITEM	DESCRIPTION	REMARKS	PART NO.
1	BUSHING, WASHARM HUB		A10-1641
2	TEE, UPPER WASHARM #590		B10-1223
3	PIN, UPPER WASHARM PIVOT		B10-1090
4	CAGE, BEARING WASHARM		B10-1647
5	HOUSING, UPPER WASHARM REVOLVING #557		B10-1648
6	ARM, WASH ASSEMBLY WITH SPRAYERS #2		B10-2752
7	CAP, PIPE CLEANOUT		P68-1490
8	NUT, LOCK THRUST		A10-3258
9	ARM, RINSE S.S. 6 SPRAYERS		B10-2753
10	PLUG, END		A50-2435
11	SPRAY JET, FAN TYPE		A50-1159
12	PIN, RINSE		A10-1263
13	ELBOW, LOWER WASH #579A		B10-2755
14	EXTENSION, LOWER WASH (CORNER MACHINES)		A10-5105
15	EXTENSION, LOWER WASH		B10-2756
16	TEE, STANDPIPE #587A		B10-2750
17	ARM, WASH ASSEMBLY WITH SPRAYERS #1		B10-2751
18	PIN, RINSE		B10-1105
19	HUB, REVOLVING RINSE #291		B10-2432
20	ARM, RINSE S.S. 7 SPRAYER		B10-2754
21	JET, SPRAY		A50-2295
22	PIPE, STAND		A10-1142

* TO ORDER SUPPLY MACHINE MODEL AND SERIAL NUMBER

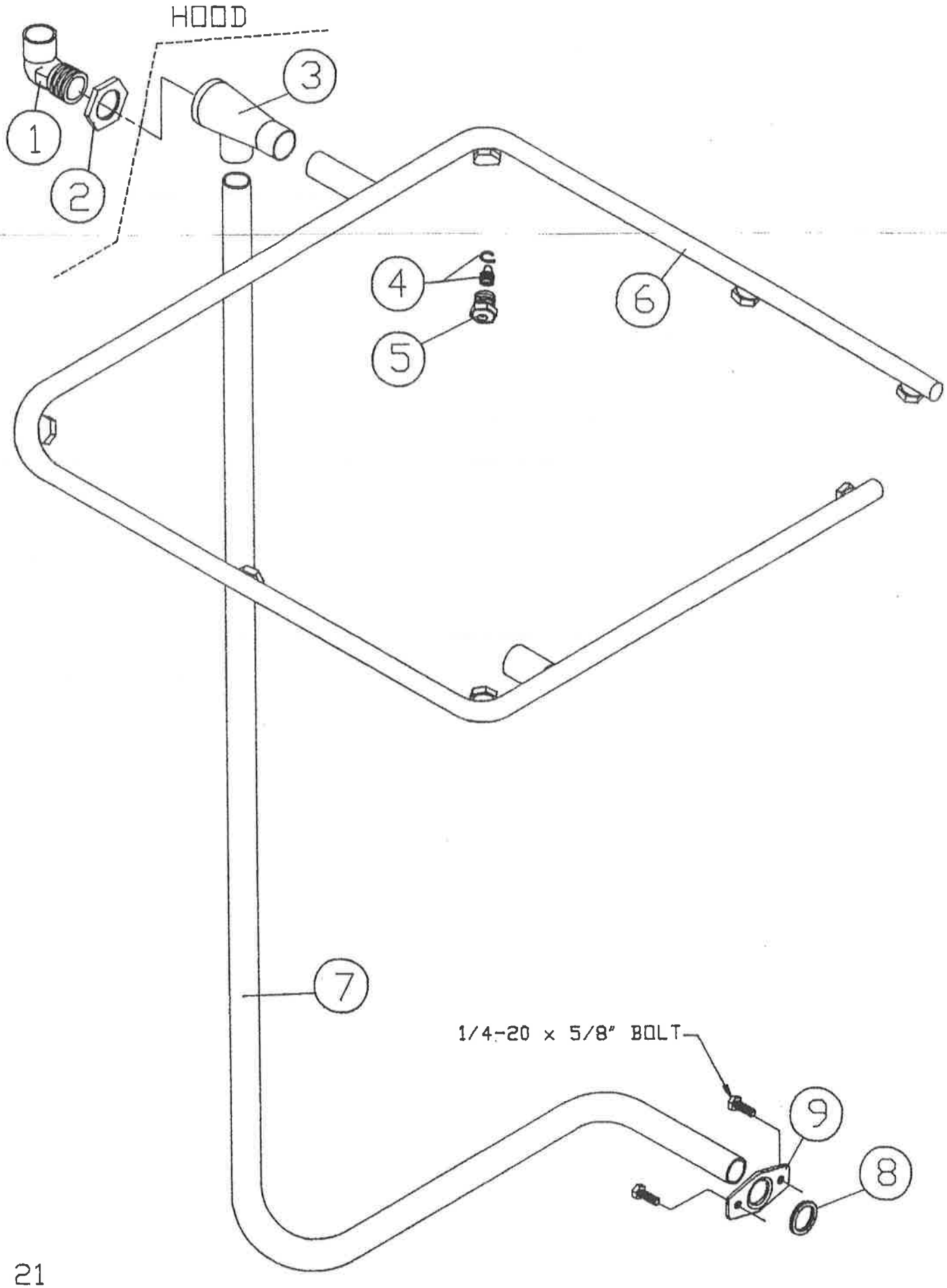
HOOD
1
2
3
4
5
6
7
1/4-20 x 5/8" BOLT
9
8

FINAL RINSE SUPPLY PIPING

ITEM	DESCRIPTION	REMARKS	PART NO.
1	ELBOW, 3/4" CxM 90°		P68-1466
2	LOCKNUT, 3/4" S.S.		A10-1859
3	TEE, 3/4" CxFxC		P68-1458
4	DIVERTER AND RETAINER		A10-1232
5	UPPER RINSE SPRAYER		A10-1174
6	MANIFOLD, UPPER RINSE	*	B10-2758
7	LOWER RINSE LINE	*	A10-2757
8	"O" RING VITON		P57-2771
9	RINSE FEED PIPE ADAPTOR		A10-4214

* TO ORDER SUPPLY MACHINE MODEL AND SERIAL NUMBER

HEATING COMPONENTS

STEAM HEAT

ELECTRIC

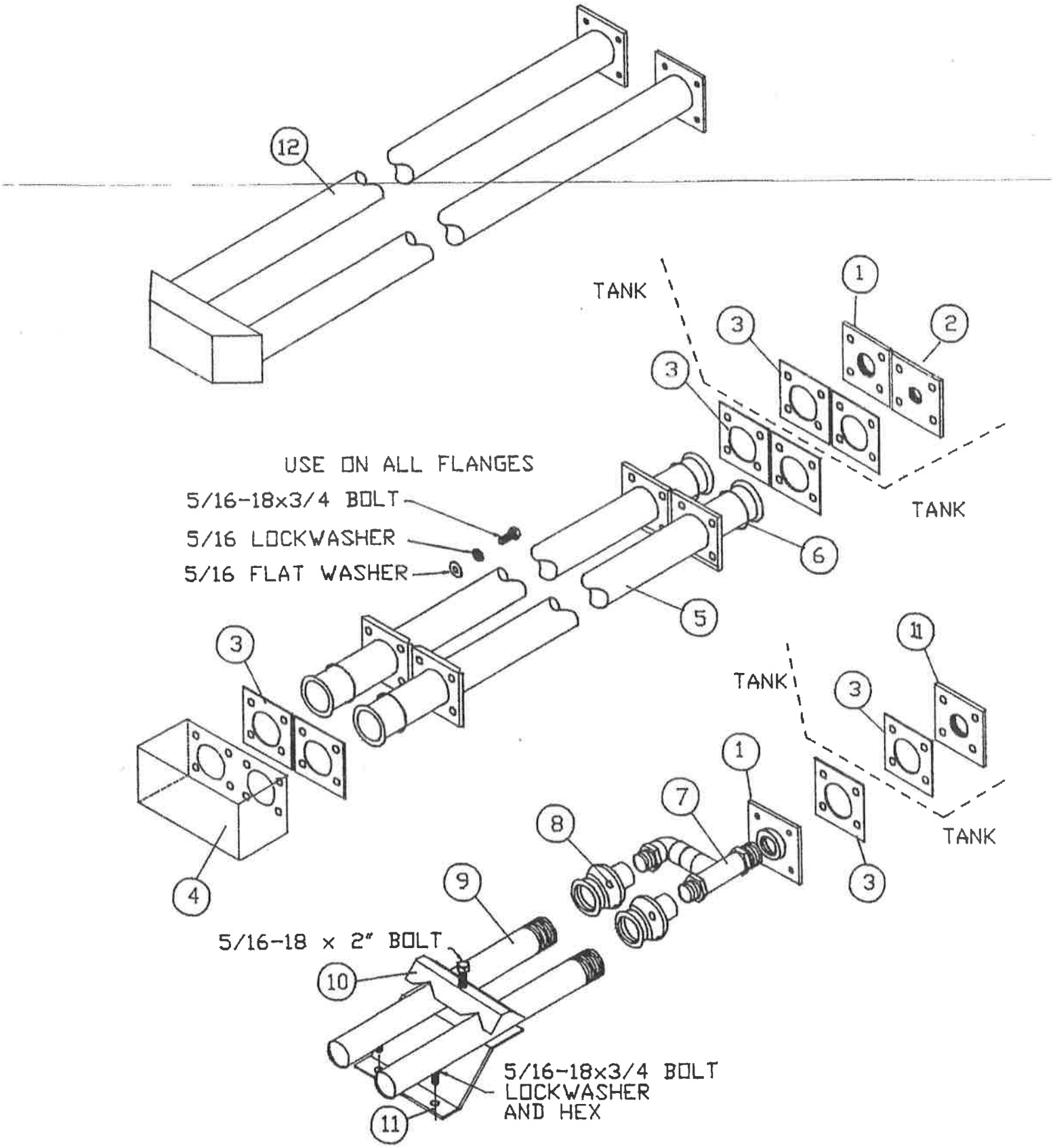
12
TANK
1
2
3
3
TANK
USE ON ALL FLANGES
5/16-18x3/4 BOLT
5/16 LOCKWASHER
5/16 FLAT WASHER
6
5
3
11
TANK
3
1
7
8
TANK
3
4
9
5/16-18 x 2" BOLT
10
5/16-18x3/4 BOLT
LOCKWASHER
AND HEX
11

TYPICAL STEAM HEAT ASSEMBLY

ITEM	DESCRIPTION	REMARKS	PART NO.
1	FLANGE, INLET ADAPTOR 3/4' NPT		A10-3332
2	FLANGE, RETURN ADAPTOR 1/2" OFFSET		A10-3329
3	GASKET, STEAM COIL		A57-2387
4	BOX, STEAM RETURN ASSEMBLY	BEFORE 7-89	*
5	PIPES, STEAM COIL WITH FLANGES	BEFORE 7-89	*
6	"O' RING, #130 VITON	BEFORE 7-89	P57-2451
7	INJECTOR MANIFOLD ASSEMBLY		B10-2329
8	SILENCER, STEAM INJECTOR		A10-2160
9	PIPE, STEAM INJECTOR 11-3/4' LONG	*	A10-2161
10	CLAMP, PIPE STEAM INJECTOR		A10-2908
11	BRACKET, PIPE SUPPORT		*
12	STEAM COIL ASSEMBLY ** U31A, U31AC	AS OF 7-89	A10-5110
	STEAM COIL ASSEMBLY ** U31A2		A10-5111

** REPLACES ITEMS 4,5,&6

* TO ORDER SUPPLY MACHINE MODEL AND SERIAL NUMBER

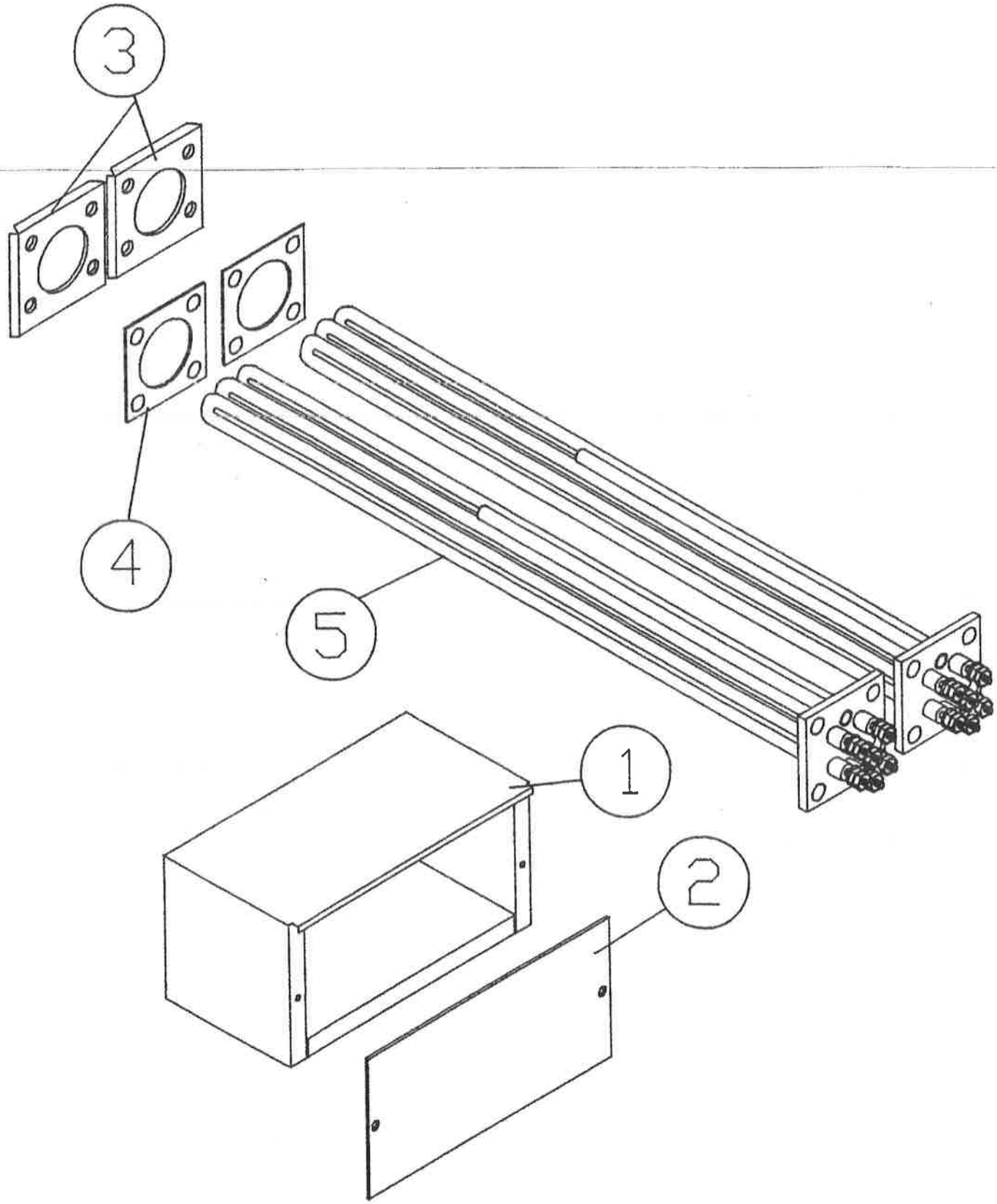
3
4
5
1
2

ELECTRIC HEAT COMPONENTS

ITEM	DESCRIPTION	REMARKS	PART NO.
1	BOX, ELEMENT ENCLOSURE 10KW		B10-2799
2	COVER, ELEMENT ENCLOSURE		A10-2800
3	FLANGE, HEATING ELEMENT		B10-1502
4	GASKET, "U" HEATING ELEMENT		A57-1114
5	HEATING ELEMENT, 5KW 208 VOLT		P55-1131
	HEATING ELEMENT, 5KW 220 VOLT		P55-1132
	HEATING ELEMENT, 5KW 480 VOLT		P55-1133

* TO ORDER SUPPLY MACHINE MODEL AND SERIAL NUMBER

TANK HEAT ASSEMBLY–SINGLE BURNER
INFRARED TANK HEAT

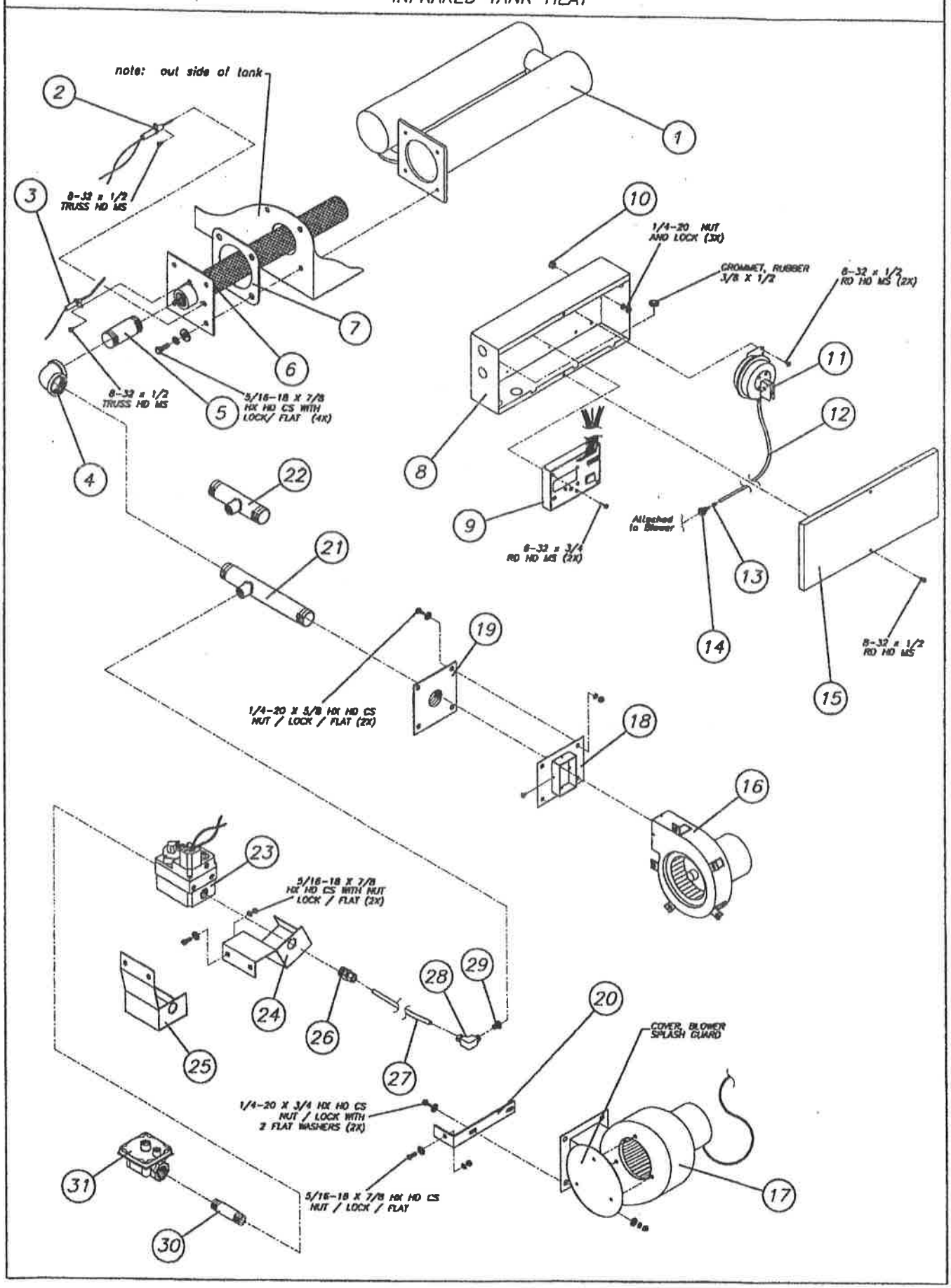

TANK HEAT ASSEMBLY-SINGLE BURNER INFRARED TANK HEAT			
ITEM	DESCRIPTION	REMARKS	PART NO.
1	ASSEMBLY, BURNER TUBE		**
2	IGNITER		P49-5798
3	SENSOR, FLAME		P49-6037
4	ELBOW		P68-1622
5	NIPPLE		P68-1638
6	BURNER		P55-5792
7	GASKET		B57-1757
8	BOX, 14" GAS CONTROL		C10-5956
9	CONTROL MODULE		P42-5944
	SET, CONTROL MODULE	CTL.BOX & HARNESS	P42-5794
10	BUSHING,	3 REQ.	A50-1556
11	SWITCH, DIAPHRAGM		P49-5795
12	TUBE, CLEAR DIAPHRAGM SWITCH		P51-5829
13	RESTRICTOR, AIR		A10-5831
14	FITTING, DIAPHRAGM SWITCH TUBE		A10-5822
15	COVER, 14" GAS CONTROL BOX		B10-5957
16	BLOWER, DAYTON		P41-6082
17	BLOWER, FASCO		P41-5793
18	ADAPTER, BLOWER		A10-6052
19	PLATE, BLOWER		A10-6009
20	BRACKET, BLOWER MNTG.		A10-5809
21	MIXING CHAMBER-8 1/2"		A10-6001
22	MIXING CHAMBER-5"		A10-5821
23	VALVE, GAS		P54-5796
24	BRACKET, GAS VALVE MNTG.		A10-5810
25	BRACKET, GAS VALVE MNTG.		A10-5808
26	FITTING, TUBE COMPRESSION		P68-5830
27	TUBE, COPPER		P51-2013
28	FITTING, ORIFICE		A10-5832
29	ORIFICE		A10-5827
30	NIPPLE		P68-1654
31	REGULATOR, GAS (Natural Gas System Only))		P54-5828
* TO ORDER - SUPPLY MACHINE MODEL AND SERIAL NUMBER			

PLUMBING COMPONENTS

BOOSTERS

SPIREC ASSEMBLY

THRUSH ASSEMBLY

ELECTRIC ASSEMBLY

FINAL RINSE

COMMON PARTS

DRAIN AND OVERFLOW

GAUGE ASSEMBLY

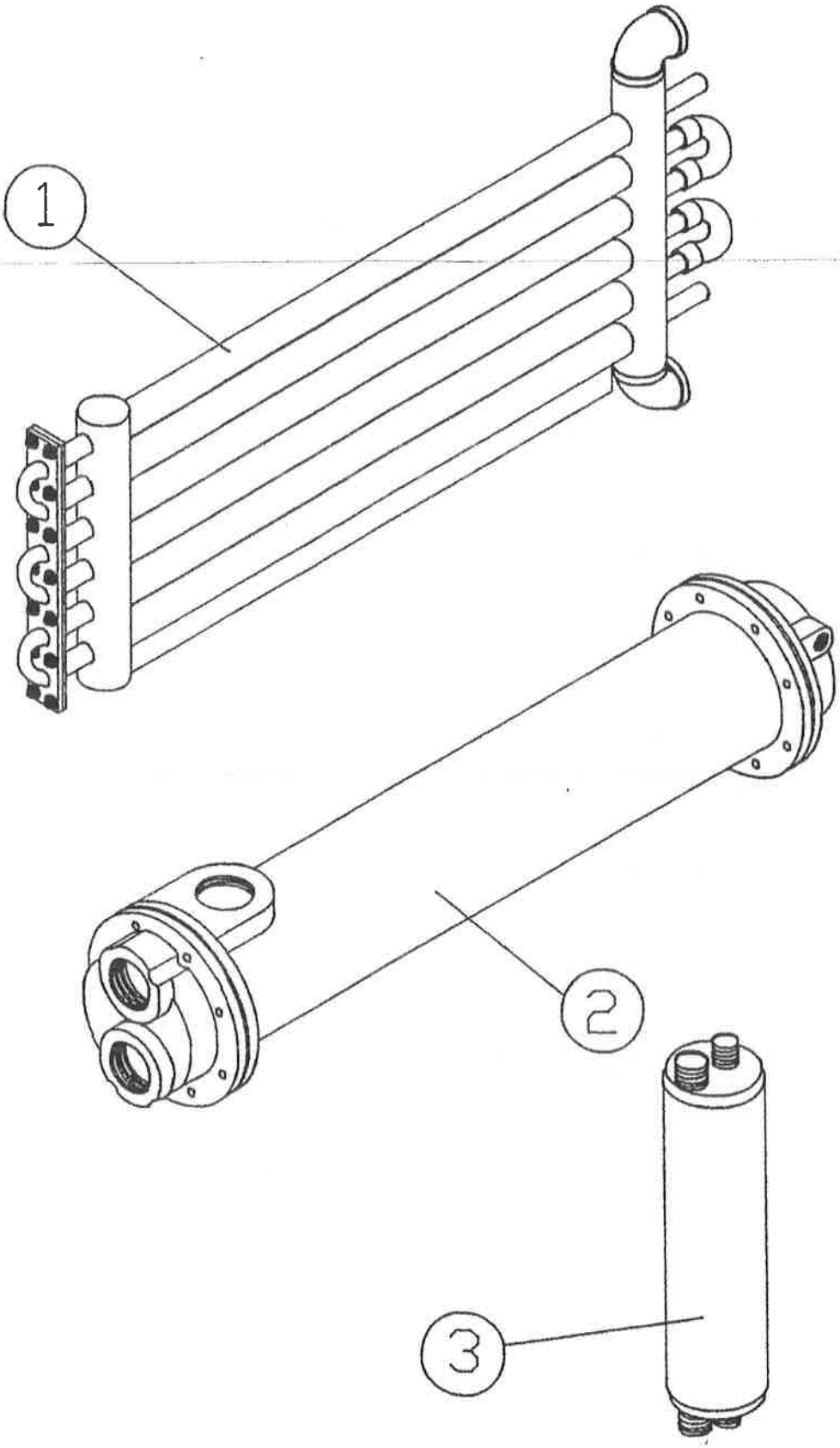
1
2
3

BOOSTER TYPES

ITEM	DESCRIPTION	REMARKS	PART NO.
1	DOUCETTE CTZ 3.2	STEAM	P64-2552
2	THRUSH MODEL # 320	STEAM	P64-1962
	THRUSH MODEL # 380	STEAM	P64-1963
	THRUSH MODEL # 260	STEAM	P64-1961
	THRUSH MODEL # 180	STEAM	P64-1960
3	SPIREC MODEL K-1	STEAM	P64-2810
	SPIREC MODEL K-2	STEAM	P64-2811

* TO ORDER SUPPLY MACHINE MODEL AND SERIAL NUMBER

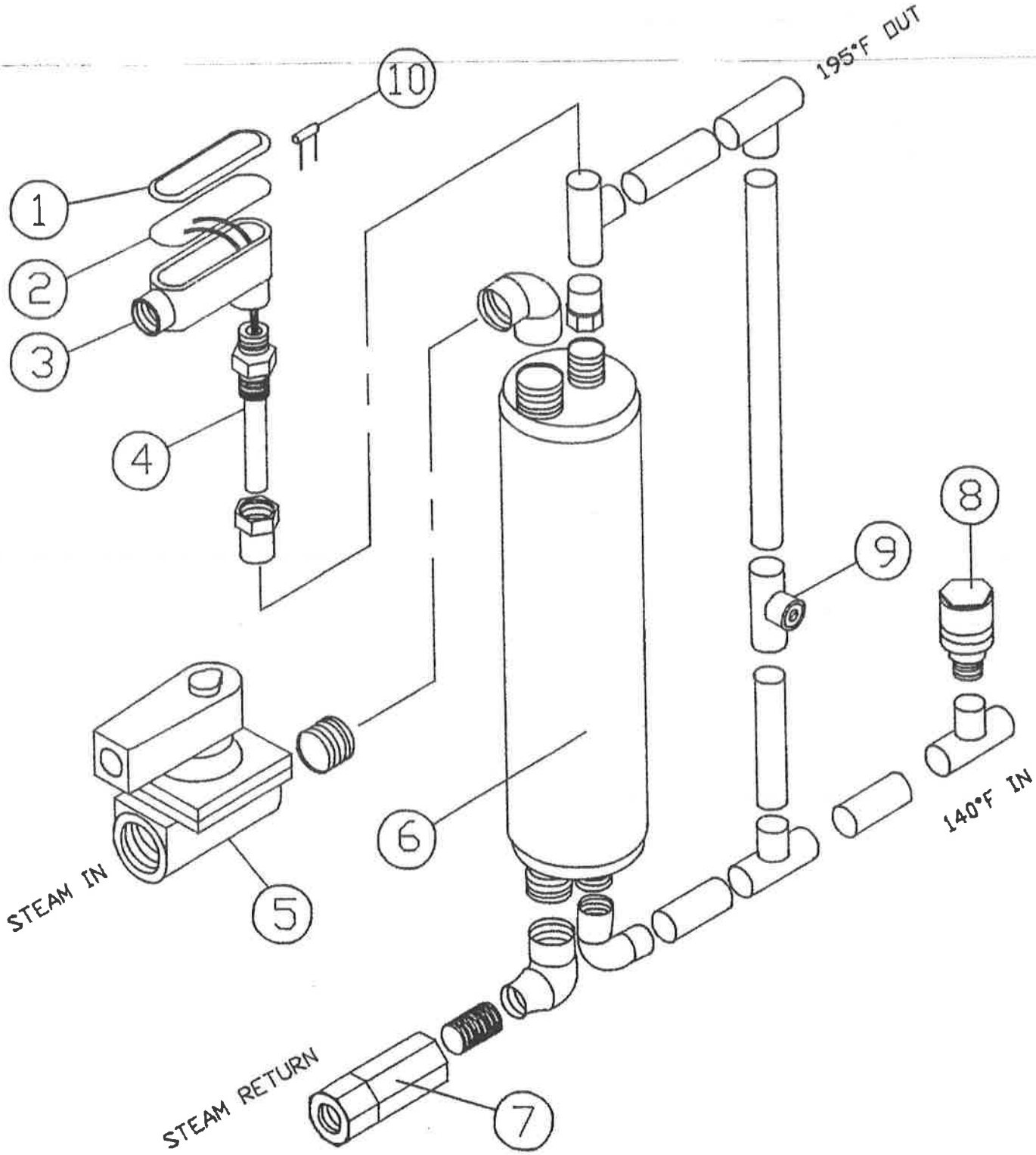
10
195°F OUT
1
2
3
4
8
9
6
140°F IN
STEAM IN
5
STEAM RETURN
7

TYPICAL SPIREC ASSEMBLY

ITEM	DESCRIPTION	REMARKS	PART NO.
1	COVER, UNILET 1/2"		P52-2019
2	GASKET, UNILET 1/2"		P52-2018
3	UNILET, BODY 1/2"		P52-2014
4	THERMOSTAT, CONTACTS OPEN ON RISE		P65-1183
5	VALVE, 1" STEAM DIAPHRAM (ASCO)	*	P54-2840
6	K-2 STEAM BOOSTER		P64-2811
	K-1 STEAM BOOSTER		P64-2810
7	STEAM TRAP, 3/4"		P61-1168
	STEAM TRAP, 1/2"		P61-1169
8	VALVE, 1/2" VACUUM RELIEF		P62-1170
9	VALVE, MIXING		P68-2831
10	CAPACITOR, .001 - 600V		P49-2461

* REPLACES P54-1078, P54-2819, AND P54-1068

SEE PAGES 37 & 39 FOR ADDITIONAL PLUMBING INFORMATION

* TO ORDER SUPPLY MACHINE MODEL AND SERIAL NUMBER

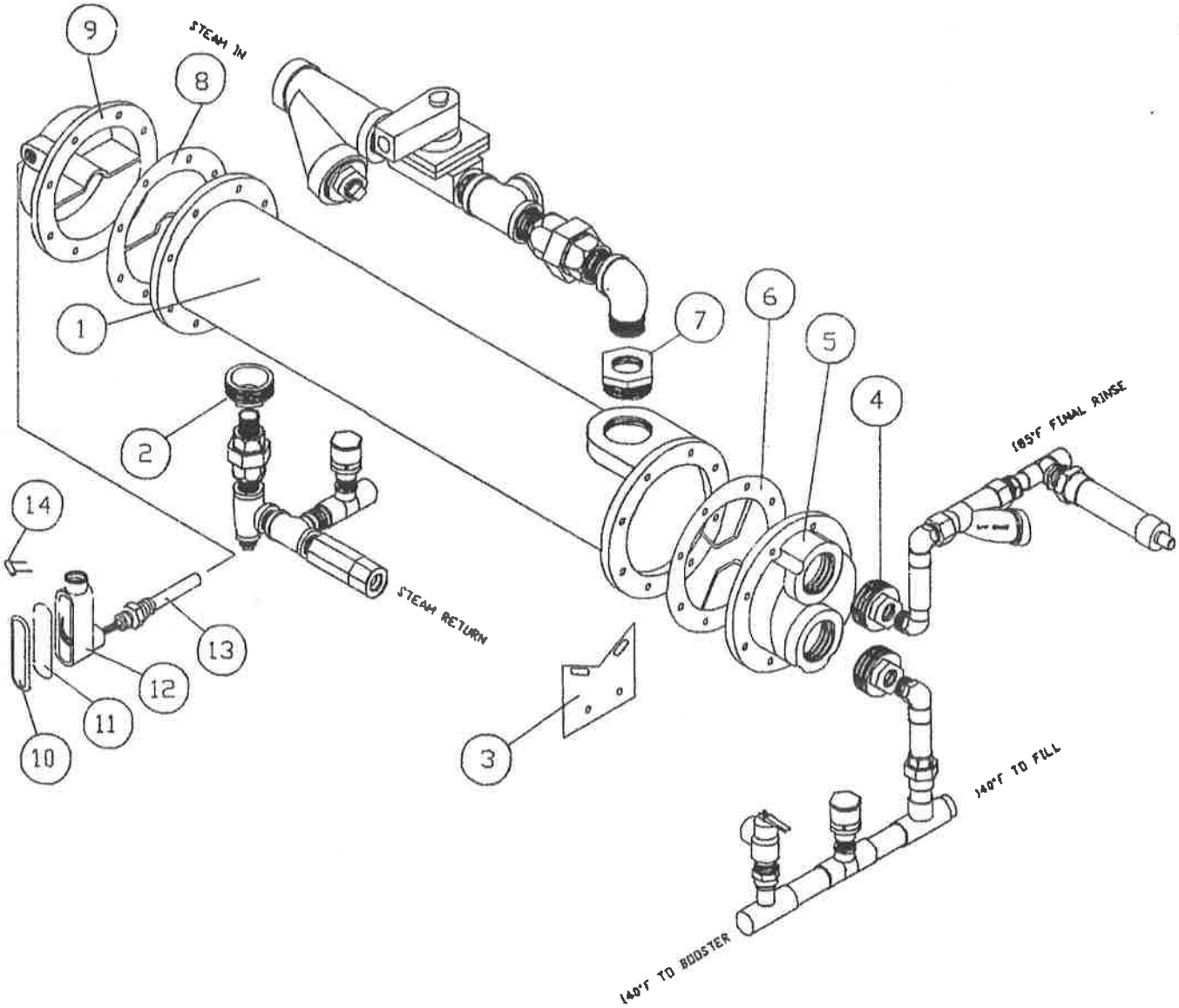

PLUMBING PARTS NOT NOTED WILL BE
FOUND IN COMMON PLUMBING PARTS SECTION

THRUSH STEAM BOOSTER

ITEM	DESCRIPTION	REMARKS	PART NO.
1	HEAT EXCHANGER, # 180		P64-1960
	HEAT EXCHANGER, # 260		P64-1961
	HEAT EXCHANGER, # 320		P64-1962
	HEAT EXCHANGER, # 380		P64-1963
2	BUSHING, STEAM RETURN		P68-1608
3	BRACKET, MACHINE MOUNTING		A10-2332
4	BUSHING, INLET AND OUTLET		P68-1610
5	HEADER, FLOW END # 260 - 380		P64-1966
	HEADER, FLOW END # 180 ONLY		P64-1965
6	GASKET, FLOW END # 260 - 380		B57-2235
	GASKET, FLOW END # 180 ONLY		B57-2234
7	BUSHING, STEAM SUPPLY		P68-1607
8	GASKET, RETURN END # 260 - 380		B57-2236
	GASKET, RETURN END # 180 ONLY		B57-1278
9	HEADER, RETURN END # 260 - 380		C10-2237
	HEADER, RETURN END # 180 ONLY		P64-1964
10	COVER, UNILET 1/2"		P52-2019
11	GASKET, UNILET 1/2"		P52-2018
12	UNILET, BODY 1/2"		P52-2014
13	THERMOSTAT, CONTACTS OPEN ON RISE		P65-1183
14	CAPACITOR, .001 - 600V		P49-2461

ITEM 1 INCLUDES ITEMS 5,6,8 & 9

* TO ORDER SUPPLY MACHINE MODEL AND SERIAL NUMBER

HATCO BOOSTERS

ITEM	DESCRIPTION	REMARKS	PART NO.
1	HATCO C-36 208 VOLT 36 KW	ELECTRIC	P64-2641
	HATCO C-36 240 VOLT 36 KW	ELECTRIC	P64-2642
	HATCO C-36 480 VOLT 36 KW	ELECTRIC	P64-2643
	HATCO C-45 208 VOLT 45 KW	ELECTRIC	P64-2798
	HATCO C-45 240 VOLT 45 KW	ELECTRIC	P64-2799
	HATCO C-45 480 VOLT 45 KW	ELECTRIC	P64-2800
	HATCO C-54 208 VOLT 54 KW	ELECTRIC	P64-2647
	HATCO C-54 240 VOLT 54 KW	ELECTRIC	P64-2648
	HATCO C-54 480 VOLT 54 KW	ELECTRIC	P64-2649

* TO ORDER SUPPLY MACHINE MODEL AND SERIAL NUMBER

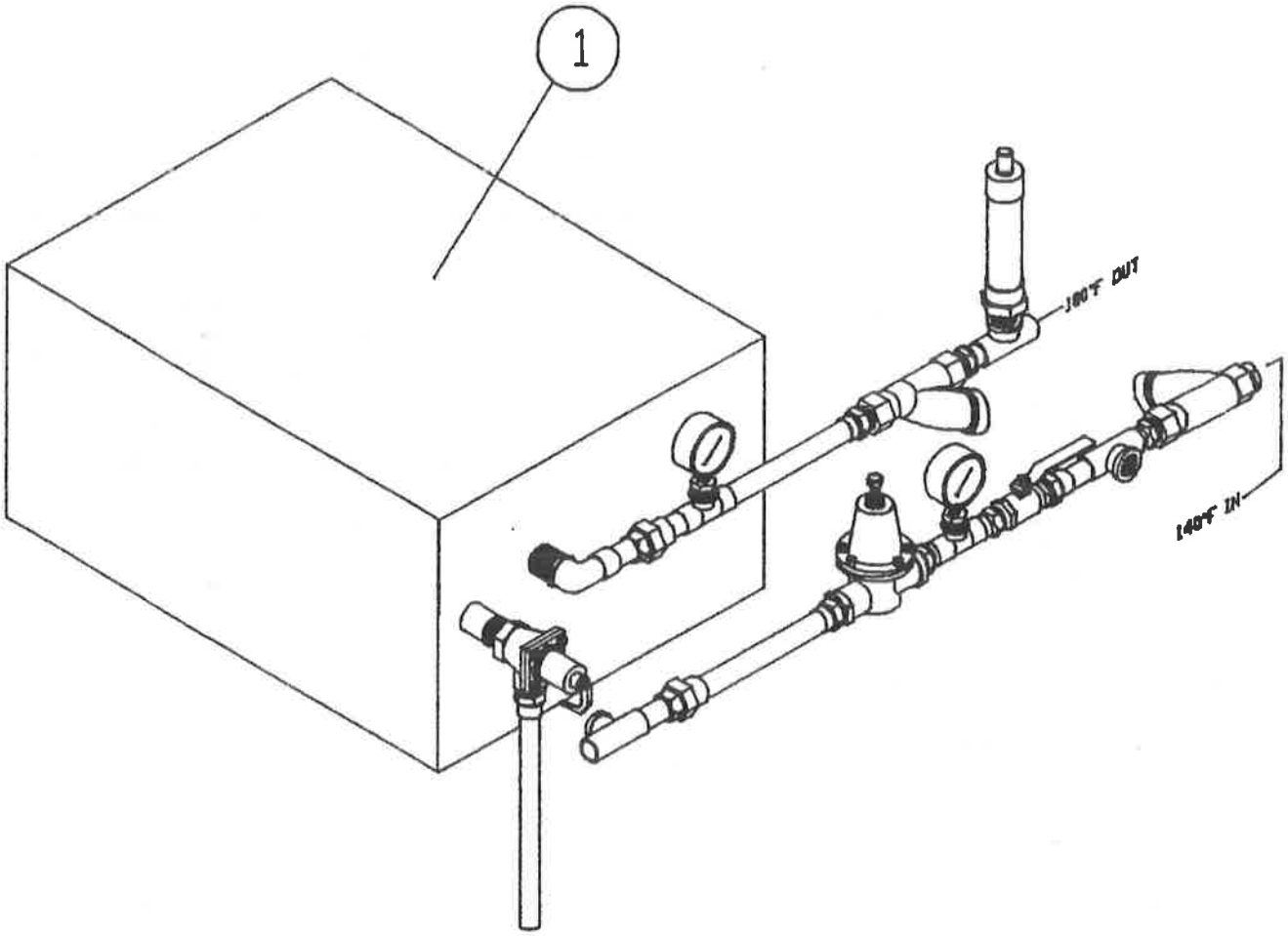

PLUMBING PARTS NOT NOTED WILL BE
FOUND IN COMMON PLUMBING PARTS SECTION

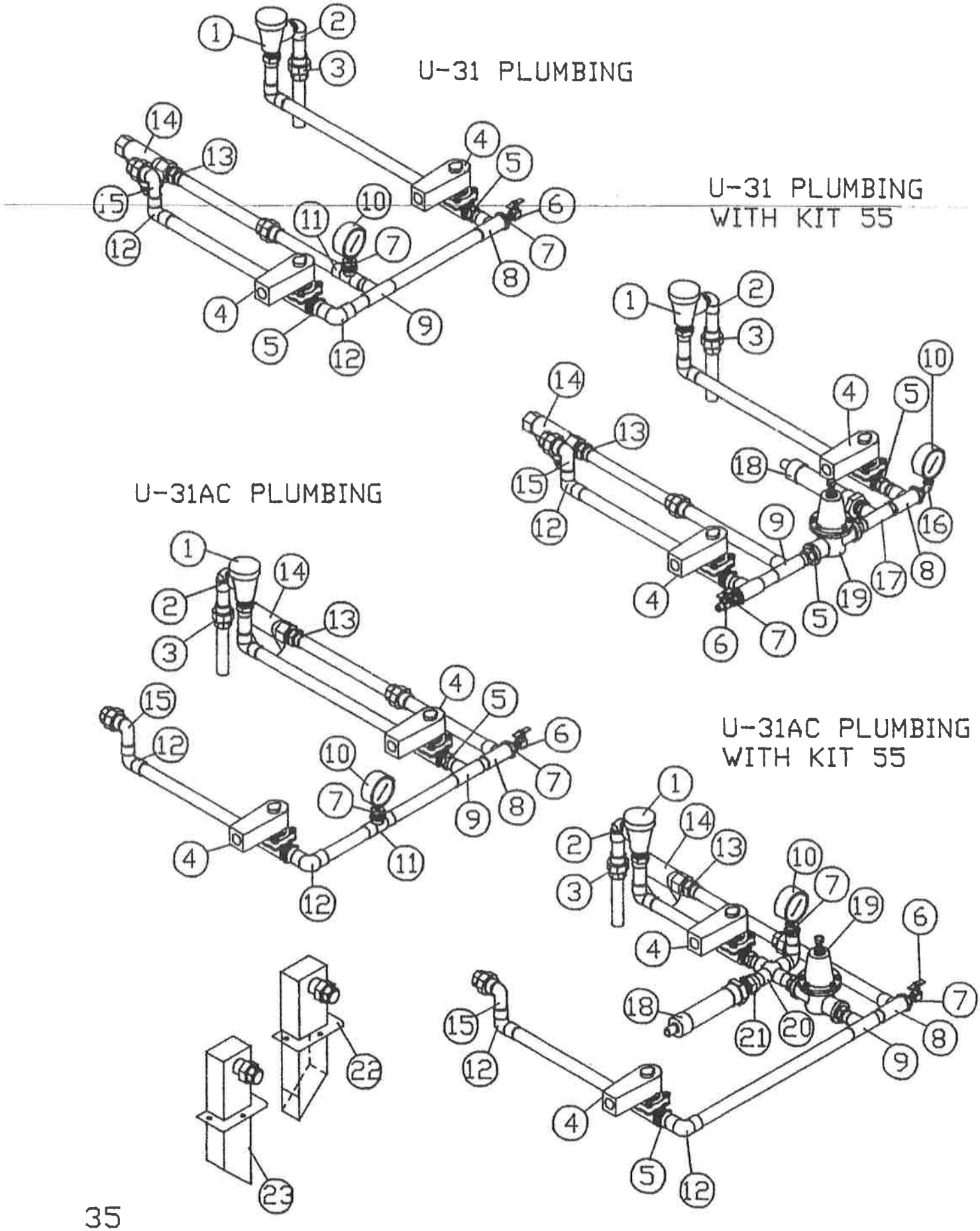
U-31 PLUMBING
U-31 PLUMBING
WITH KIT 55
U-31AC PLUMBING
U-31AC PLUMBING
WITH KIT 55

PLUMBING ASSEMBLIES

ITEM	DESCRIPTION	REMARKS	PART NO.
1	VACUUM BREAKER, 3/4'		P62-1149
2	ELBOW, 3/4" 90° CxM		P68-1466
3	UNION, 3/4' CxC		P68-1446
4	VALVE, 3/4" PISTON 110 VOLTS		P54-2815
	VALVE, 3/4" PISTON 208-240V		P54-2816
5	ADAPTOR, 3/4' FTGxM		P68-1431
6	VALVE, 1/4' INSPECTION MxF		P68-1511
7	BUSHING, 1/2x1/4" MxF		P68-1534
8	TEE, 3/4x1/2x3/4' CxFxC		P68-1429
9	TEE, 3/4' CxCxC		P68-1447
10	GAUGE, PRESSURE 0-100 PSI		P65-1136
11	TEE, 3/4x3/4x1/2" CxCxF		P68-1449
12	ELBOW, 3/4' 90° CxC		P68-1440
13	ADAPTOR, 3/4' CxM		P68-1430
14	LINE STRAINER, 3/4"		P63-1115
15	ELBOW, 3/4' 90° FTGxC		P68-1441
16	ELBOW, 1/4' MxF BRASS		P68-1515
17	TEE, 3/4' CxCxF		P68-1448
18	SHOCK STOP, 3/4"		P68-2250
19	VALVE, PRESSURE REDUCING 3/4'		P62-1166
20	CROSS, 3/4' CxCxCxC		P68-1450
21	ADAPTOR, 3/4" FTGxF		P68-1433
22	WATER TOWER		*
23	WATER TOWER		*

* TO ORDER SUPPLY MACHINE MODEL AND SERIAL NUMBER

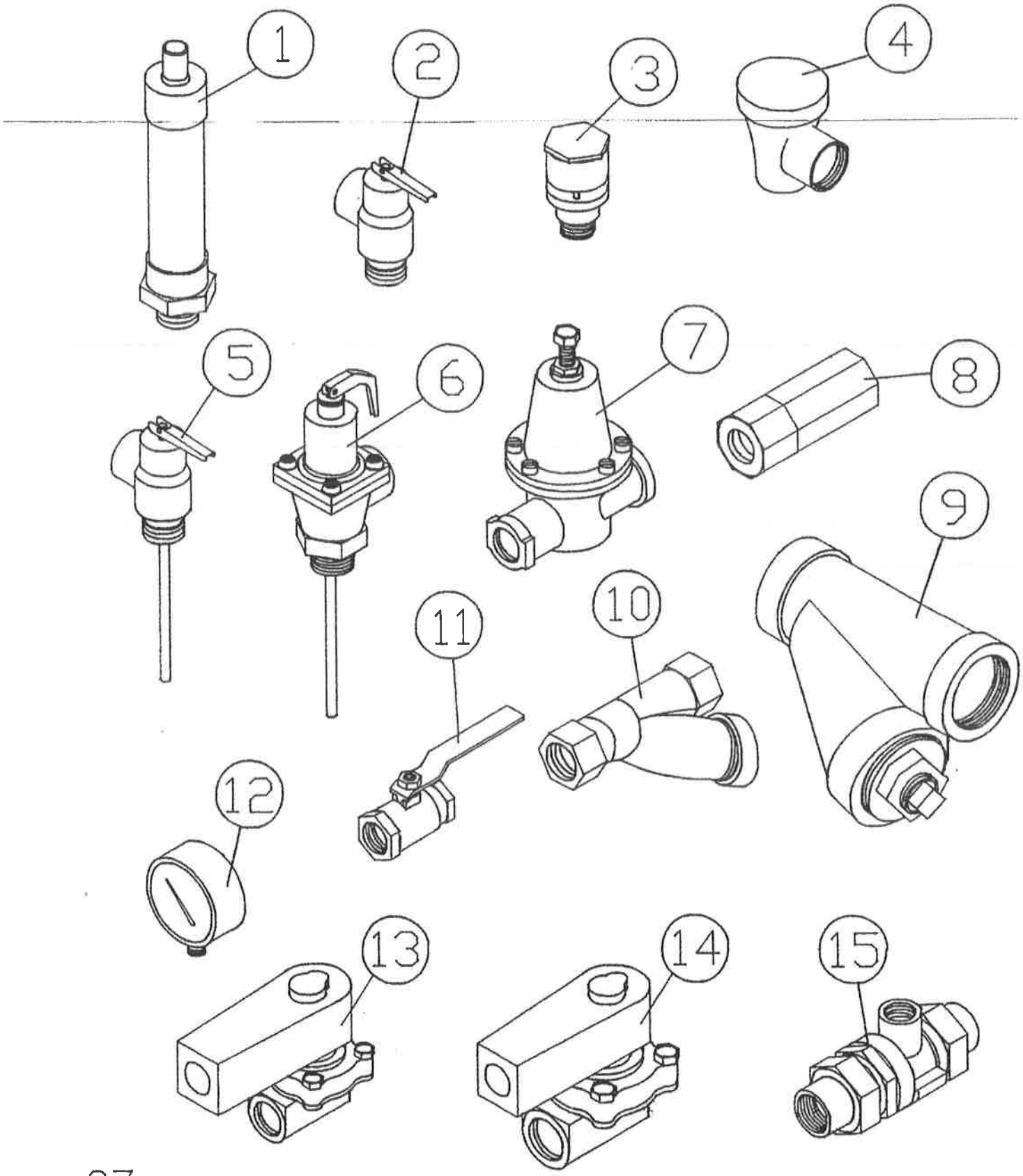
1
2
3
4
5
6
7
8
9
10
11
12
13
14
15

COMMON PARTS PLUMBING

ITEM	DESCRIPTION	REMARKS	PART NO.
1	SHOCK STOP, 3/4"		P68-2250
2	VALVE, PRESSURE RELIEF # 3L 3/4'		P62-1171
3	VALVE, VACUUM RELIEF 1/2'		P62-1170
4	VACUUM BREAKER, 3/4'	A	P62-1149
5	VALVE, PRESSURE & TEMP RELIEF #100XL		P62-1174
6	VALVE, HI TEMP AND PRESSURE RELIEF #40XL		P62-1173
7	VALVE, PRESSURE REDUCING 3/4'	B	P62-1166
8	STEAM TRAP, 1/2'		P61-1169
	STEAM TRAP, 3/4'		P61-1168
9	LINE STRAINER, BLACK IRON 1 1/4'	C	P63-1159
	LINE STRAINER, BLACK IRON 1"	D	P63-1158
	LINE STRAINER, BLACK IRON 2"	E	P63-1160
10	LINE STRAINER, BRASS 3/4'	F/G	P63-1115
11	BALL VALVE, 1/2"		P68-1182
	BALL VALVE, 3/4"		P68-2453
12	GAUGE, PRESSURE 0-100 PSI		P65-1136
13	VALVE, SOLENOID PISTON 3/4' 120V (ASCO)	H/I *	P54-2815
	VALVE, SOLENOID PISTON 3/4" 208/240V (ASCO)	H/I *	P54-2816
14	VALVE, SOLENOID DIAPHRAM 1" 120V STEAM (ASCO)	J/K	P54-2840
	VALVE, SOLENOID DIAPHRAM 1" 208V STEAM (ASCO)	J/K	P54-2841
15	BACKFLOW PREVENTER, 9D		P62-1918
A	REPAIR KIT		P62-1164
B	REPAIR KIT		P62-1167
C	REPLACEMENT SCREEN 1 1/4'		P63-1162
D	REPLACEMENT SCREEN 1'		P63-1161
E	REPLACEMENT SCREEN 2'		P63-1163
F	REPLACEMENT SCREEN 3/4'		P63-1117
G	REPLACEMENT O RING		P57-1148
H	REPAIR KIT		P54-2821
I	REPLACEMENT COIL 120 VOLTS		P54-2808
	REPLACEMENT COIL 208/240 VOLT		P54-2825
J	REPAIR KIT		P54-2842
K	REPLACEMENT COIL 120 VOLTS		P54-2859
	REPLACEMENT COIL 208 VOLTS		P54-2860
	REPLACEMENT COIL 240 VOLTS		P54-2861
	ASCO STEAM REPLACEMENT COIL 120V 3/4 - 1 1/4"		P54-1074
	ASCO STEAM REPLACEMENT COIL 208V 3/4 - 1 1/4'		P54-1075
	ASCO STEAM REPLACEMENT COIL 240V 3/4 - 1 1/4'		P54-1076
	ASCO 3/4' STEAM REPAIR KIT		P54-1077
	ASCO 1 1/4' STEAM REPAIR KIT		P54-1081
	SKINNER STEAM REPLACEMENT COIL 120V 3/4-1 1/4		P54-1065
	SKINNER STEAM REPLACEMENT COIL 208V 3/4-1 1/4		P54-1066
	SKINNER 3/4' REPAIR KIT		P54-1067
	SKINNER 1 1/4' REPAIR KIT STEAM		P54-1070
	* CAN BE USED STEAM OR HOT WATER		

* TO ORDER SUPPLY MACHINE MODEL AND SERIAL NUMBER

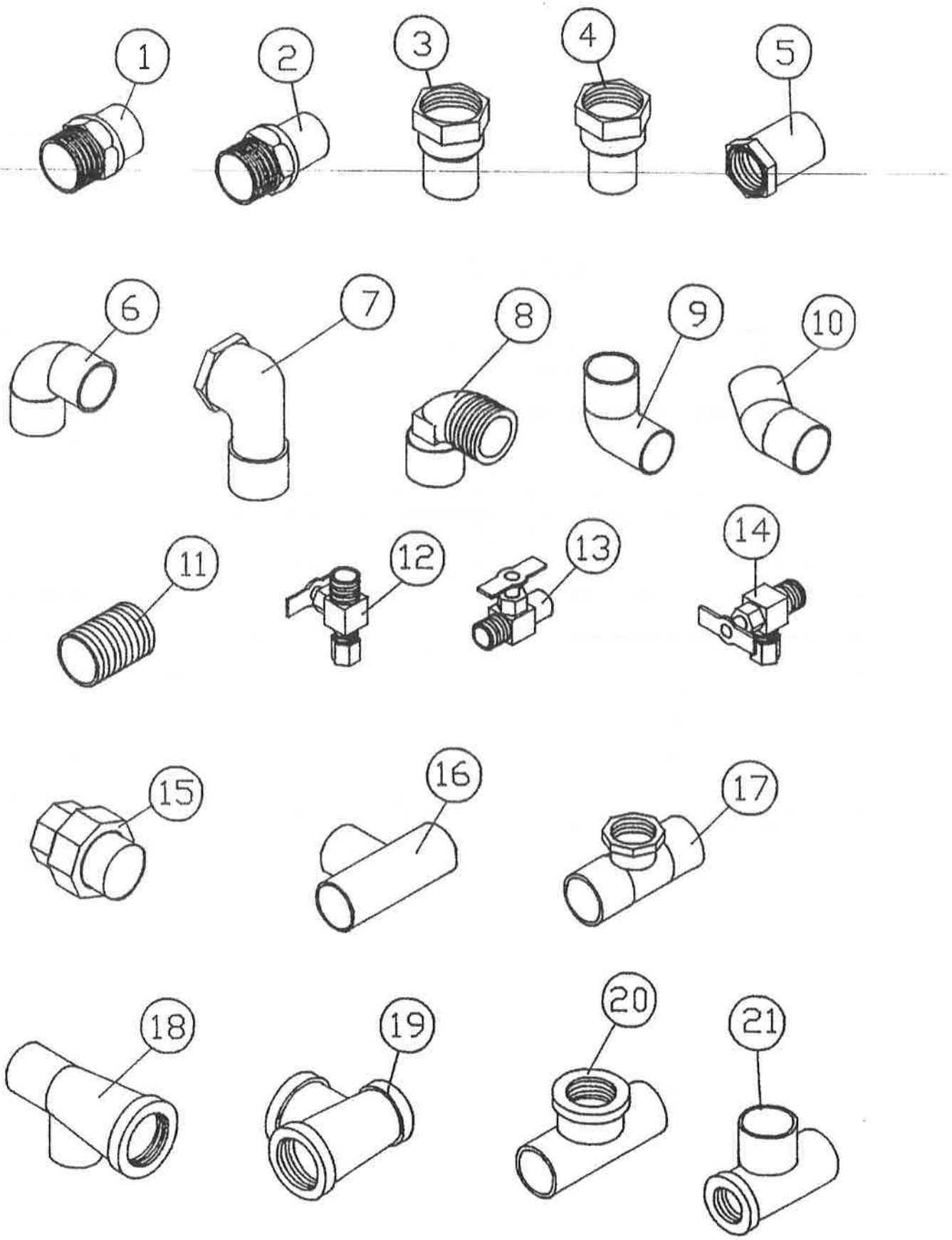
1
2
3
4
5
6
7
8
9
10
11
12
13
14
15
16
17
18
19
20
21

TYPICAL PLUMBING FITTINGS

ITEM	DESCRIPTION	REMARKS	PART NO.
1	ADAPTOR, 3/4' CxM		P68-1430
2	ADAPTOR, 3/4' FTGxM		P68-1431
3	ADAPTOR, 3/4' CxF		P68-1432
4	ADAPTOR, 3/4' FTGxF		P68-1433
5	ADAPTOR, 3/4x1/2" CxF		P68-1436
6	ELBOW, 90° 3/4' CxC		P68-1440
7	ELBOW, 90° 3/4" CxF		P68-1465
8	ELBOW, 90° 3/4' CxM		P68-1466
9	ELBOW, 90° 3/4' FTGxC		P68-1441
10	ELBOW, 45° 3/4" CxC		P68-1438
11	NIPPLE, 3/4'xCLOSE BRASS		P68-1527
12	VALVE, NEEDLE 1/4"MPTx1/4"TUBE STRAIGHT		P68-1532
13	VALVE, INSPECTION 1/4'MPTx1/4'FPT		P68-1511
14	VALVE, NEEDLE 1/4"MPTx1/4"TUBE 90°		P68-1533
15	UNION, 3/4' CxC		P68-1446
16	TEE, 3/4' CxCxC		P68-1447
17	TEE, 3/4' CxCxF		P68-1448
18	TEE, 3/4' CxFxC		P68-1458
19	TEE, REDUCING 3/4x1/2x3//4" BRASS		P68-1460
20	TEE, 3/4x3/4x1/2' CxCxF		P68-1449
21	TEE, 3/4x1/2x3/4' CxFxC		P68-1429

* TO ORDER SUPPLY MACHINE MODEL AND SERIAL NUMBER

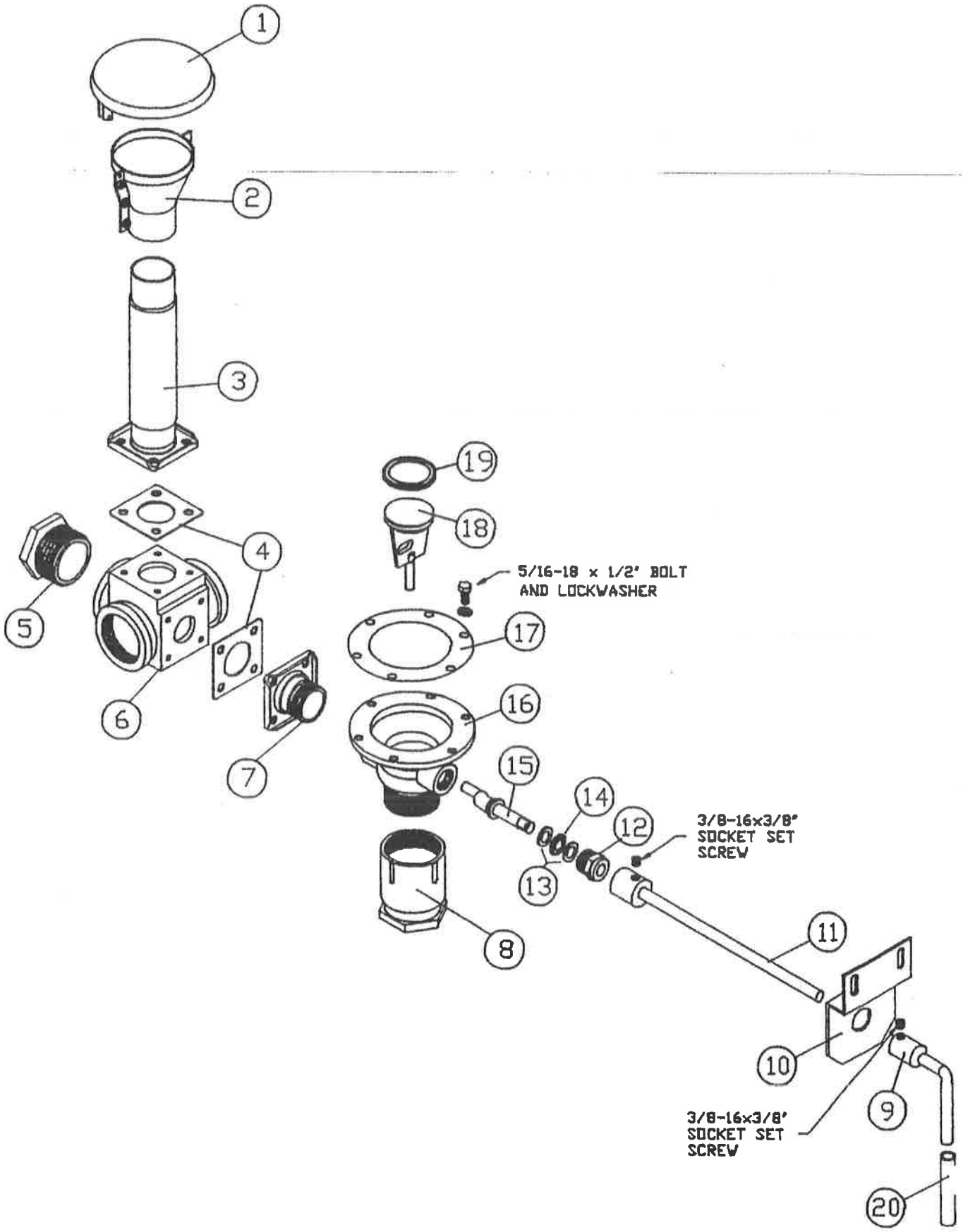
1
2
3
4
5
6
7
8
9
10
11
12
13
14
15
16
17
18
19
20
5/16-18 x 1/2" BOLT
AND LOCKWASHER
3/8-16x3/8"
SOCKET SET
SCREW
3/8-16x3/8"
SOCKET SET
SCREW

DRAIN AND OVERFLOW

ITEM	DESCRIPTION	REMARKS	PART NO.
1	COVER, OVERFLOW FUNNEL		A10-1874
2	FUNNEL, OVERFLOW ASSEMBLY		A10-1873
3	OVERFLOW, STANDPIPE TO FUNNEL		A10-1889
4	GASKET, 'U"		A57-1114
5	PIPE PLUG, PVC 2"		P68-1698
6	TEE, OVERFLOW DRAIN		B10-1871
7	ADAPTOR, ASSEMBLY DRAIN TEE		A10-3305
8	CAP, 2" DRAIN VALVE ASSEMBLY		A10-2067
9	HANDLE, DRAIN NEW STYLE		A10-4732
10	BRACKET, DRAIN HANDLE		B10-1927
11	SHAFT, CROSS OVER 12 1/2" LONG		B10-2909
12	NUT, WASTE VALVE GLAND		A10-1182
13	PACKING RING, WASTE VALVE		A10-1183
14	'O" RING, #311 PACKING 2 REQUIRED		P57-2787
	PACKING, IF "O' RING NOT USED		A57-1195
15	ARM, WASTE VALVE ECCENTRIC		A10-1184
16	VALVE, WASTE BODY ONLY		C10-1193
17	GASKET, WASTE VALVE "D"		A57-1194
18	VALVE AND STEM		A10-1189
19	"O' RING, #327		P57-1057
20	SLEEVE, PLASTIC HANDLE		P57-2826
	WASTE VALVE COMPLETE	ITEMS 12,13,14,15,16,18,&19	A10-1251
	OVERFLOW ASSEMBLY	INCLUDES 1,2,3,4,6,&7	A10-1875
	NOTE: WHEN ORDERING ALWAYS SUPPLY MACHINE SERIAL AND MODEL NUMBER		

* TO ORDER SUPPLY MACHINE MODEL AND SERIAL NUMBER

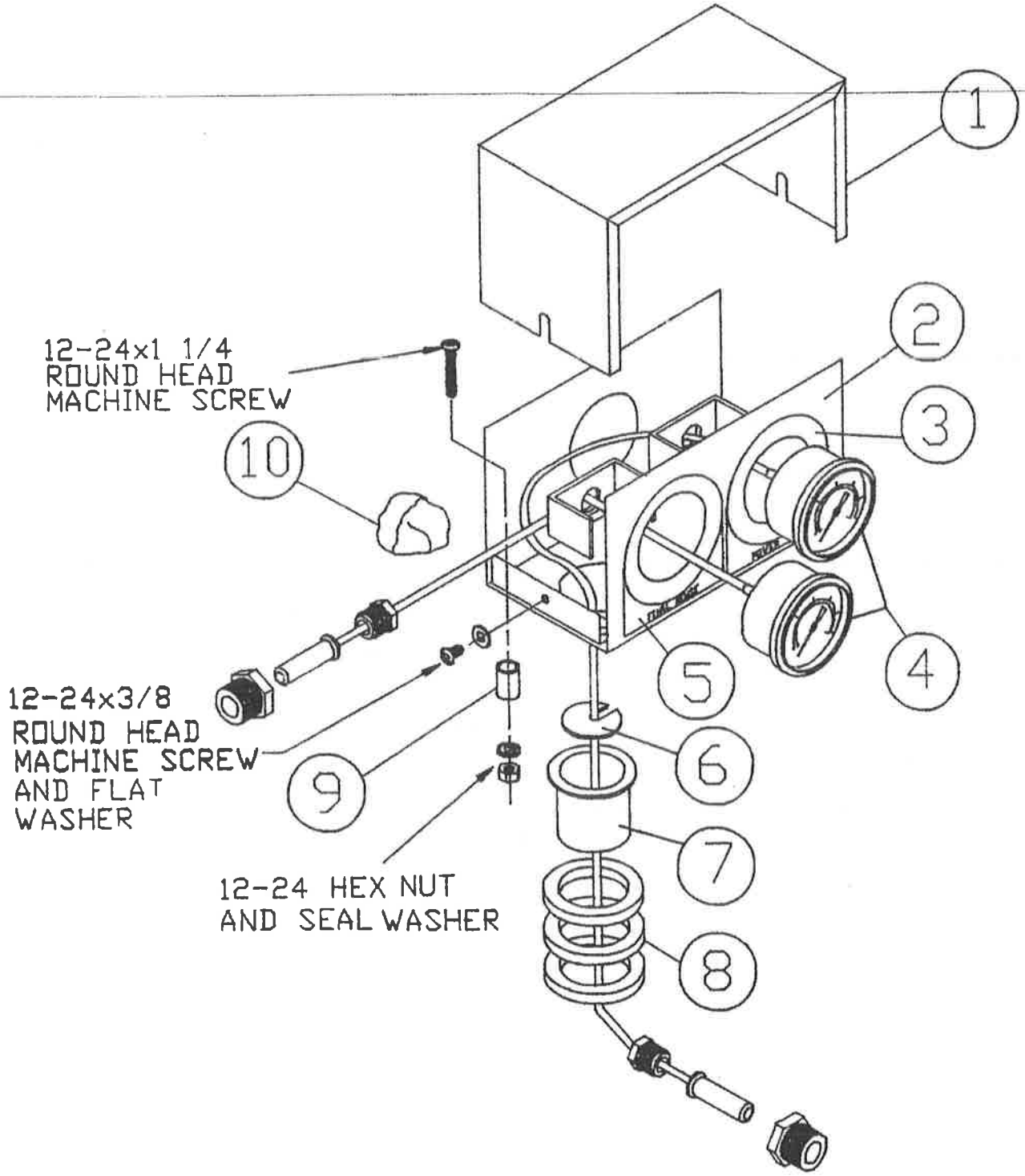
1
2
3
4
5
6
7
8
9
10
12-24x1 1/4
ROUND HEAD
MACHINE SCREW
12-24x3/8
ROUND HEAD
MACHINE SCREW
AND FLAT
WASHER
12-24 HEX NUT
AND SEAL WASHER

TYPICAL GAUGE ASSEMBLY

ITEM	DESCRIPTION	REMARKS	PART NO.
1	COVER, GAUGE HOUSING		B10-2148
2	HOUSING, GAUGE ASSEMBLY 1 OR 2 HOLE		B10-2149
3	DECAL, POWER WASH		A69-1456
4	GAUGE, TEMPERATURE		P65-1135
5	DECAL, FINAL RINSE		A69-1460
6	WASHER, SEALING CUP		A10-2155
7	CUP, SEALING FOR GAUGE		A10-2150
8	RINGS, NEOPREME		A57-2156
9	SPACER, STAND-OFF LEGS		A10-2070
10	SEALING PUTTY (DUM DUM)		P57-1878

* TO ORDER SUPPLY MACHINE MODEL AND SERIAL NUMBER

ELECTRICAL SYSTEMS

CONTROL BOX

FLOAT SWITCH

THERMOSTATS

COMMON FITTINGS

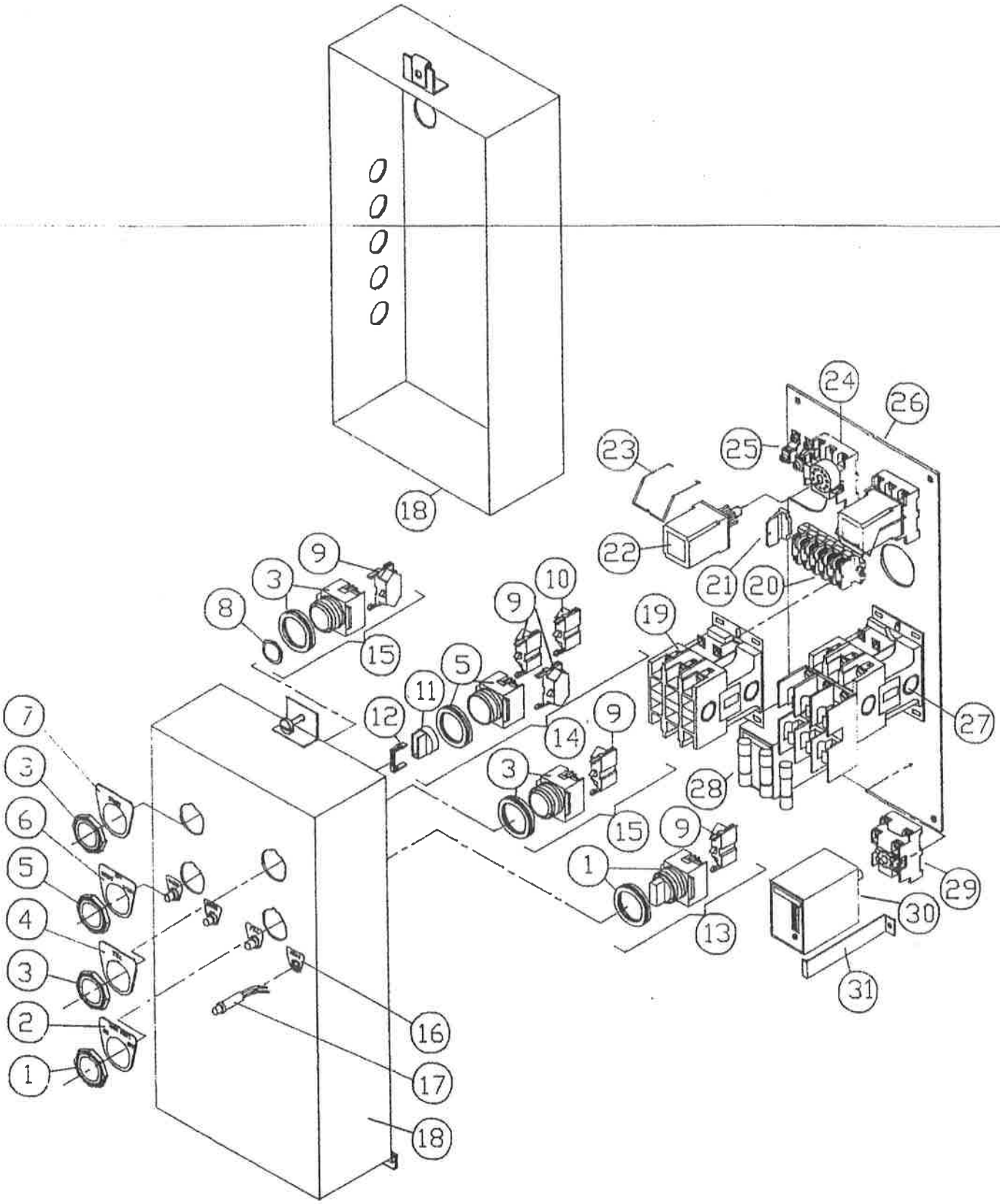
18
24
26
23
25
22
21
20
9
3
10
8
9
19
15
5
11
12
14
9
27
7
3
3
28
6
15
9
5
1
29
4
30
13
3
31
2
16
1
17
18

CONTROL BOX ASSEMBLY

ITEM	DESCRIPTION	REMARKS	PART NO.
1	SWITCH, SELECTOR 2 POSITION		P49-1306
2	DECAL, TANK HEAT		A69-4147
3	SWITCH, PUSH BUTTON		P49-1305
4	DECAL, FILL		A69-4139
5	SWITCH, SELECTOR 3 POSITION		P49-1307
6	DECAL, RINSE - OFF - WASH		A69-4146
7	DECAL, START		A69-1429
8	BUTTON, BLACK		P49-1314
9	BLOCK, CONTACT N/O (GREEN)		P49-1303
10	BLOCK, CONTACT N/C (RED)		P49-1304
11	KNOB, CONTROL SELECTOR SWITCH		P49-1316
12	INSERT, COLOR WHITE (FOR KNOB #11)		P49-1317
13	SWITCH, TANK HEAT ASSEMBLY		A10-4213
14	SWITCH, WASH - RINSE ASSEMBLY		A10-4212
15	SWITCH, START OR FILL ASSEMBLY		A10-1936
16	DECAL, PILOT LIGHTS		A69-3917
17	PILOT LIGHT, RED 250 VOLTS		P49-2037
18	BOX, CONTROL 4 HOLE		C10-3925
19	CONTACTOR, 3 POLE 30 AMPS 220V		P47-1802
20	TERMINAL BLOCK, #524		P52-1099
21	TERMINAL BLOCK, END SECTION #530		P52-1100
22	RELAY, 3 POLE 10 AMPS 240V		P47-2463
23	CLIP, RELAY HOLD DOWN		P47-2466
24	SOCKET, RELAY 11 PIN		P47-2465
25	GROUND LUG		P52-1156
26	PLATE, MOUNTING		A10-2482
27	CONTACTOR, FUSED 3 POLE 40 AMPS 220V		P47-1822
28	FUSE, 35 AMPS SC TYPE		P52-1748
29	SOCKET, TIMER 8 PIN		P47-1741
30	TIMER, ADJUSTABLE 512 SECONDS 220V		P46-1745
31	CLIP, TIMER HOLD DOWN		A10-2104

* TO ORDER SUPPLY MACHINE MODEL AND SERIAL NUMBER

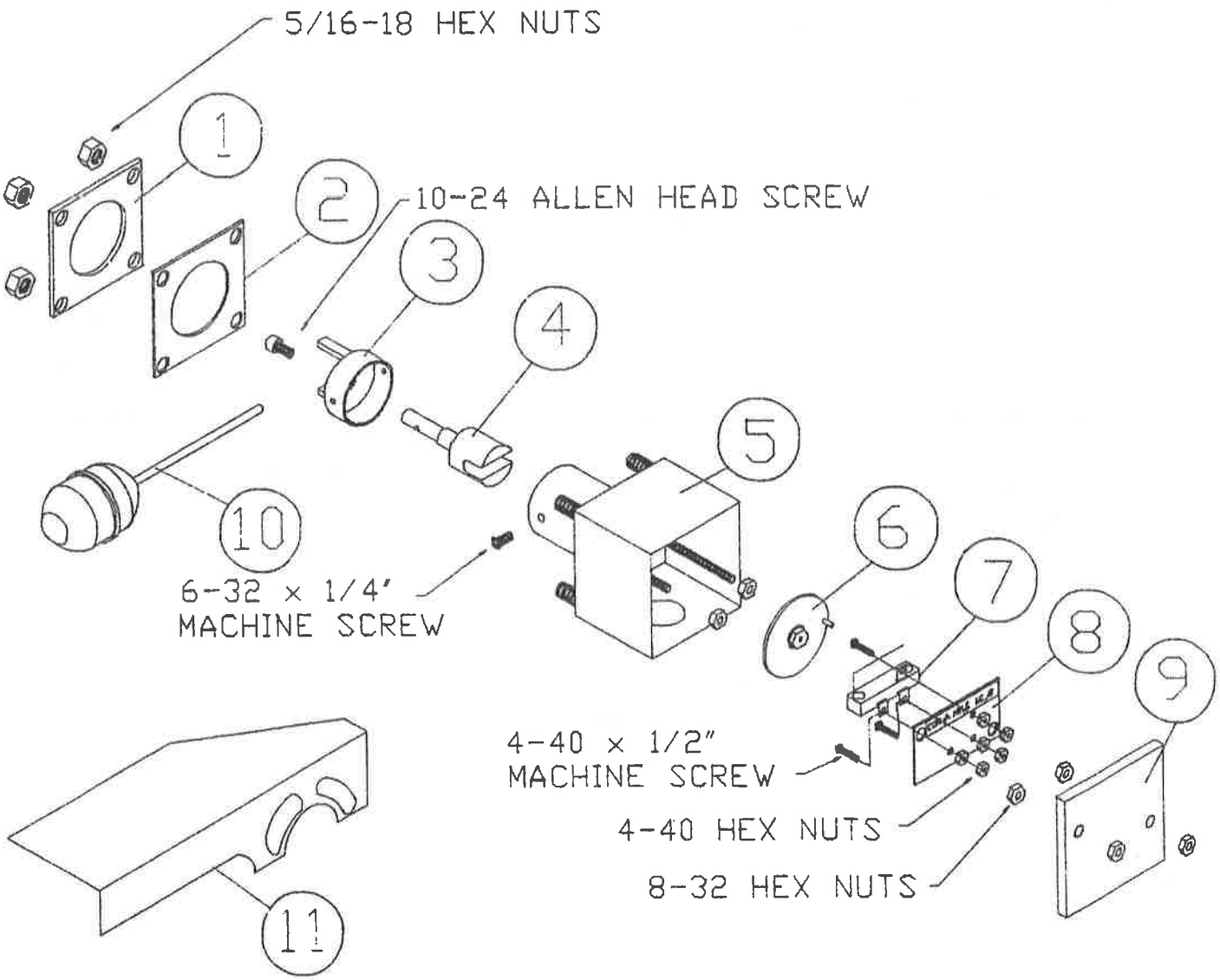
5/16-18 HEX NUTS
1
2
10-24 ALLEN HEAD SCREW
3
4
5
10
6-32 x 1/4'
MACHINE SCREW
6
7
8
9
4-40 x 1/2"
MACHINE SCREW
4-40 HEX NUTS
8-32 HEX NUTS
11

FLOAT SWITCH ASSEMBLY

ITEM	DESCRIPTION	REMARKS	PART NO.
1	PLATE, PRESSURE MOUNTING		A10-1418
2	GASKET, #2840		A57-1419
3	COVER, MAGNET FLOAT		A10-1431
4	SHAFT WITH HORSESHOE MAGNET		A10-4485
5	HOUSING ASSEMBLY		B10-1423
6	ROTOR SWITCH DISC WITH MAGNET		A10-4484
7	SWITCH, MICRO		P49-1113
8	PLATE, MICRO SWITCH MOUNTING		A10-1434
9	COVER		A10-1424
10	FLOAT		A10-1432
11	SHIELD, FLOAT GUARD	*	B10-2059
	MICRO SWITCH ASSEMBLY ITEMS 7&8		A10-2054
	FLOAT SWITCH COMPLETE		C10-1005

* TO ORDER SUPPLY MACHINE MODEL AND SERIAL NUMBER

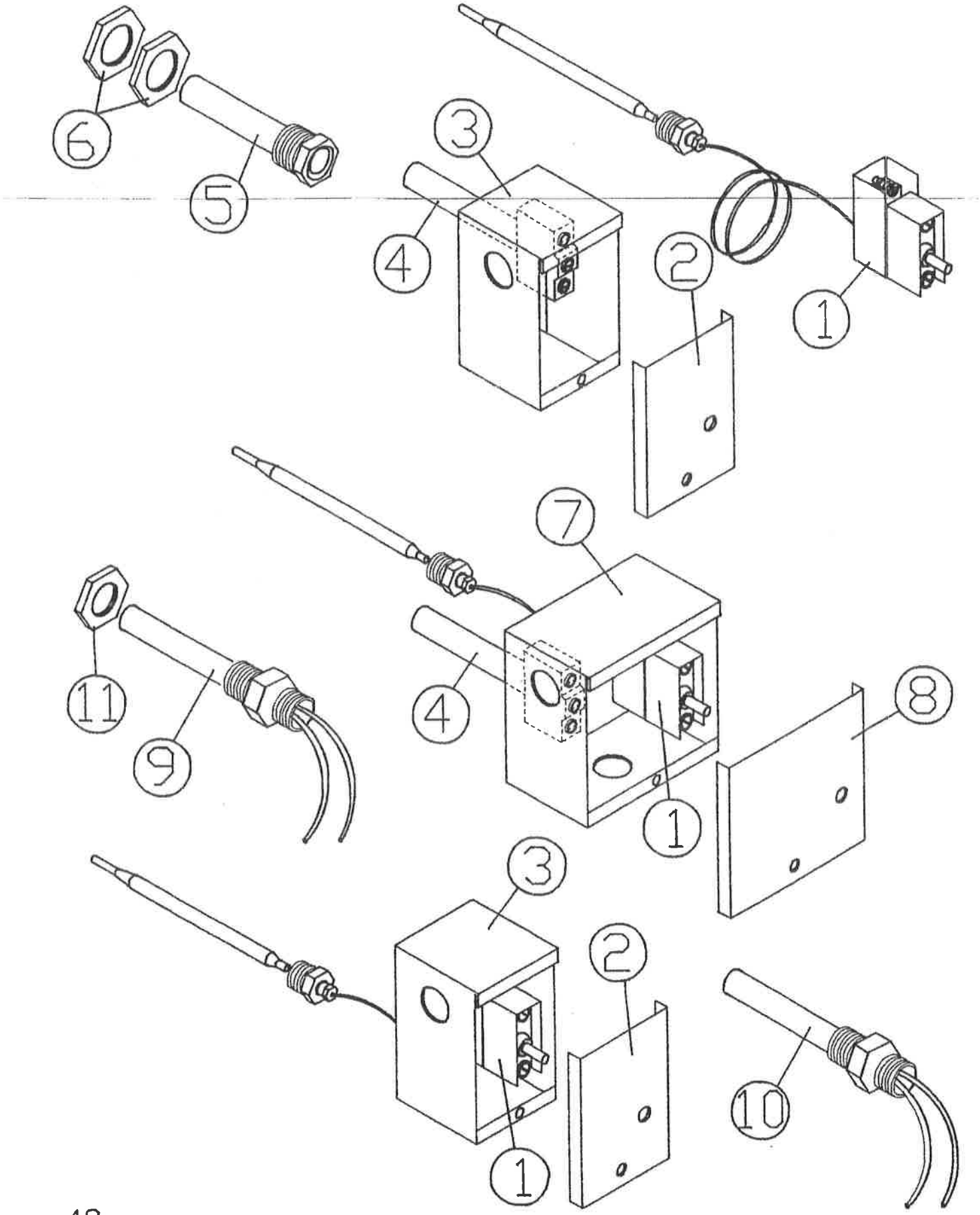
6
5
3
4
2
1
7
11
9
4
8
1
3
2
10
1

THERMOSTATS

ITEM	DESCRIPTION	REMARKS	PART NO.
1	SWITCH, HI LIMIT CUT-OFF		P65-1188
2	COVER PLATE		A10-4585
3	BOX, THERMOSTAT		A10-4584
4	THERMOSTAT (FENWAL)		P65-1185
5	THERMOSTAT WELL		A10-1858
6	LOCKNUTS, 3/4" NPT S.S.		A10-1859
7	BOX, DUAL THERMOSTAT		A10-4587
8	COVER, DUAL THERMOSTAT		A10-4588
9	THERMOSTAT, CONTACTS CLOSE ON RISE		P65-1184
10	THERMOSTAT, CONTACTS OPEN ON RISE		P65-1183
11	LOCKNUTS, 1/2" NPT S.S.		A10-1446
	THERMOSTAT ASSEMBLY ITEMS 2,3,&4	*	A10-3358
	HIGH LIMIT ASSEMBLY ITEMS 1,2,&3		B10-4583
	DUAL ASSEMBLY ITEMS 1,4,7,&8		B10-4586
	* REPLACES ROUND STYLE ASSEMBLY		

* TO ORDER SUPPLY MACHINE MODEL AND SERIAL NUMBER

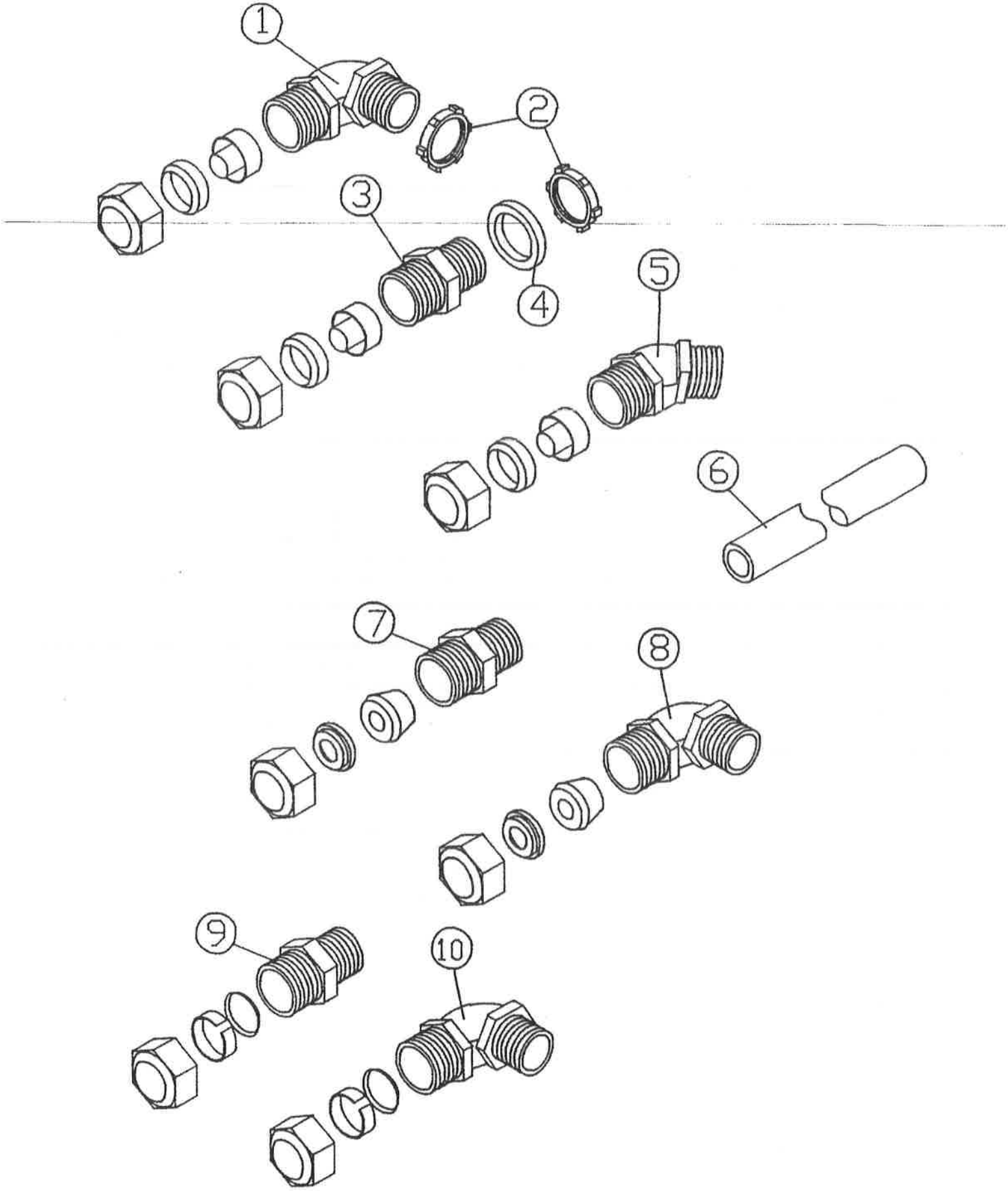
1
2
3
4
5
6
7
8
9
10

TYPICAL ELECTRICAL FITTINGS

ITEM	DESCRIPTION	REMARKS	PART NO.
1	FITTING, 3/8" SEALTITE 90°	*	P52-1018
2	LOCKNUT, 1/2" CONDUIT	**	P52-1035
3	FITTING, 3/8" SEALTITE STRAIGHT	*	P52-1142
4	SEALING RING, 1/2"	**	P52-1038
5	FITTING, 3/8" SEALTITE 45°	*	P52-1227
6	SEALTITE, 3/8" LIQUID TITE FLEXABLE	*	P45-1048
7	FITTING, STRAIN RELEIF STRAIGHT	***	P52-2490
8	FITTING, STRAIN RELEIF 90°	***	P52-2554
9	FITTING, 1/2" CONDUIT EMT STRAIGHT	**	P52-1197
10	FITTING, 1/2" CONDUIT EMT 90°	**	P52-1107

* SIZES AVAILABLE 3/8" - 2"
** SIZES AVAILABLE 1/2" - 2"
*** USED WITH STERO REED SWITCHES

* TO ORDER SUPPLY MACHINE MODEL AND SERIAL NUMBER

Stera