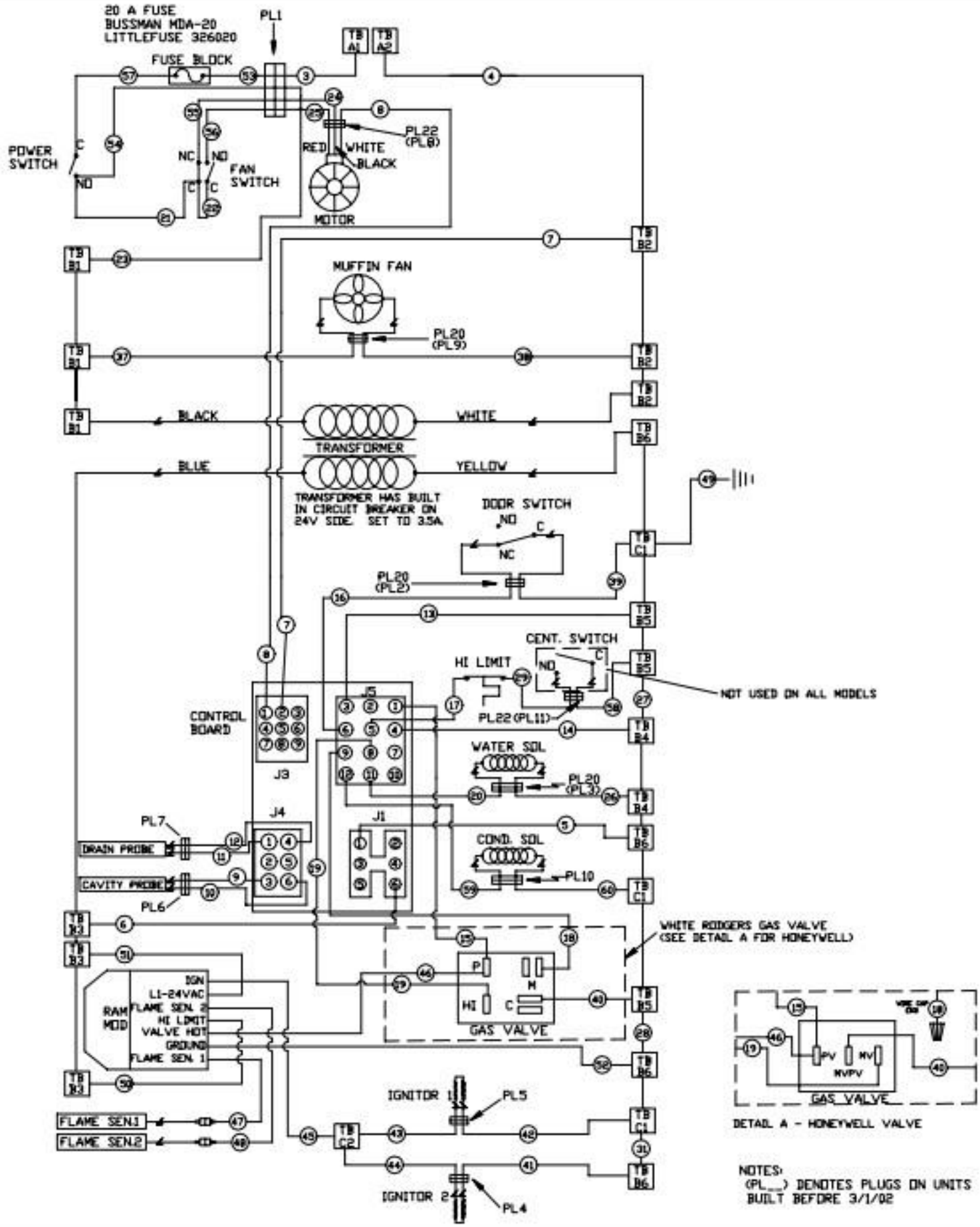

- MULTI-PIN CONNECTOR
- PLUG CONNECTOR
- COMPONENT LEAD
- TERMINAL BLOCK CONNECTIONS
- WIRE NUMBERS

VOLTAGE	120
PHASE	1
AMPERAGE	15

southbend

WIRING DIAGRAM COMBI
120 V, 60 Hz

P/N
1180638

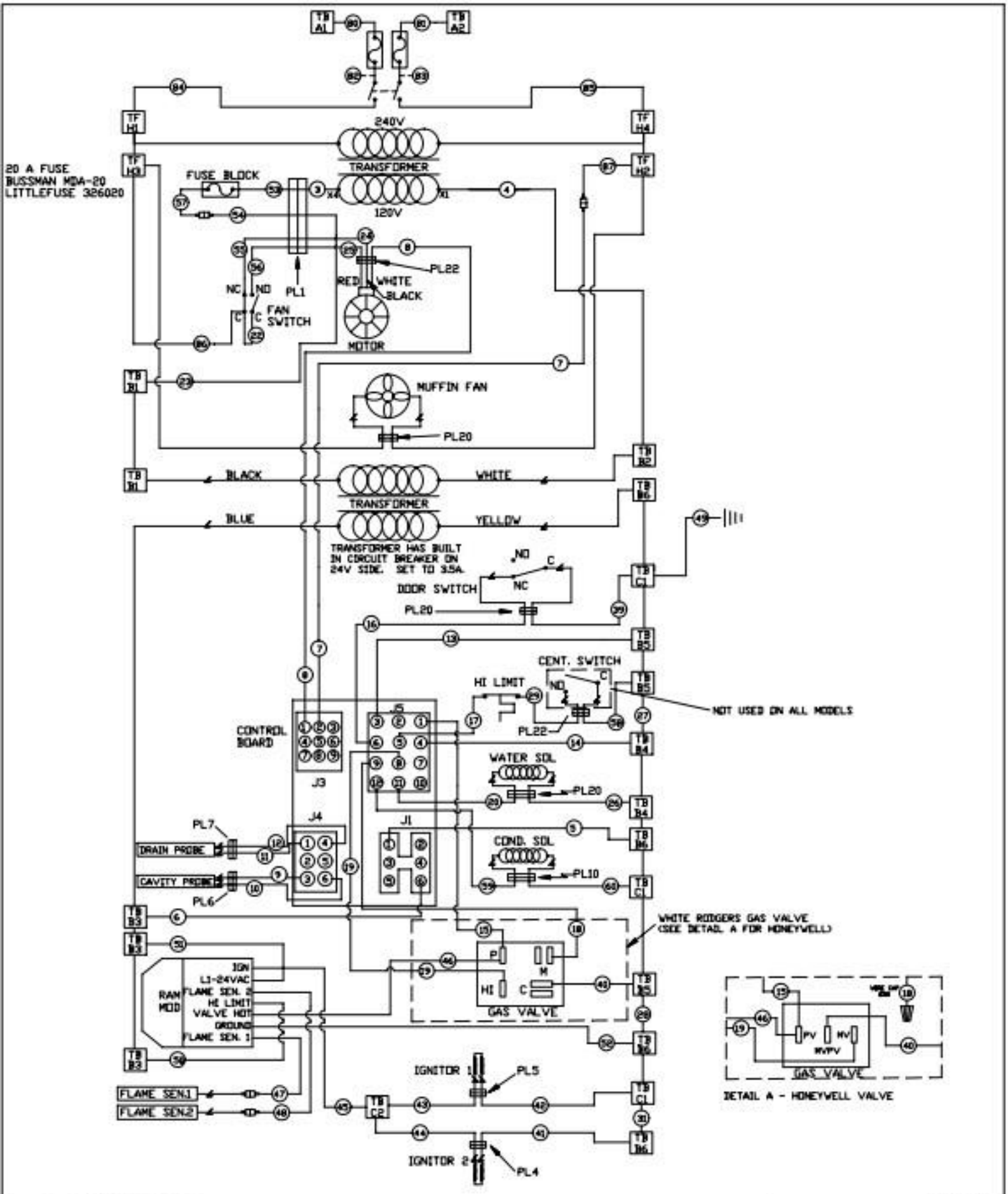

∠ – COMPONENT LEAD	▭ – MULTI-PIN CONNECTOR
TB – TERMINAL BLOCK CONNECTIONS	⊏⊐ – PLUG CONNECTOR
(11) – WIRE NUMBERS	TF – TRANSFORMER BLOCK CONNECTIONS

VOLTAGE	208
PHASE	1
AMPERAGE	15

southbend

WIRING DIAGRAM COMBI
208 V, 50/60 Hz

P/N
1184050