READ AND SAVE THESE INSTRUCTIONS

REVEAL® USER MANUAL

SCC P/N 21-26055

REVEAL® FREE-STANDING SELF-SERVICE HEATED MERCHANDISERS

> REAR SLIDING DOOR UNITS WITH PERFORATED PLENUMS THAT SLIDE IN TANDEM WITH DOORS

> SOLID BACK UNITS WITH FIXED METAL PERFORATED PLENUM

> CAUTION! DO NOT PUSH OR PULL ON UPPER GLASS ENCLOSURE!

> ONLY USE HANDLES (AT EACH END OF CASE) TO PUSH OR PULL CASE INTO POSITION!

> SEE PAGES 10-11 FOR FRONT/SIDE PANEL/REAR PANELS & TOE-KICK ATTACHMENT INSTRUCTIONS

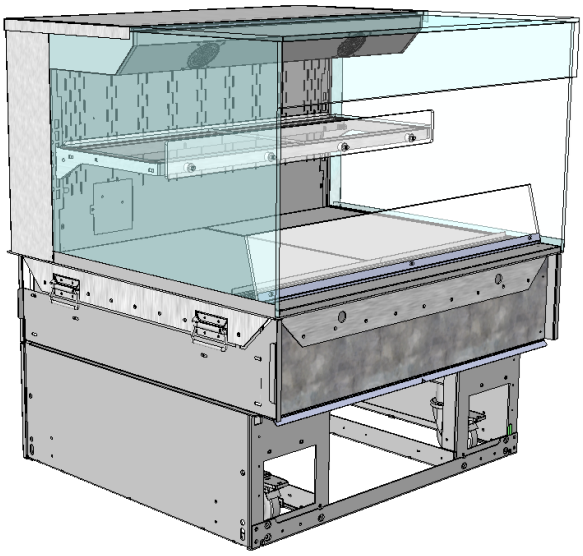

Model NR3640HSSV Free Standing Unit With Solid Back Shown WITHOUT Front/Side/Rear Cladding and Toe-Kick Attached

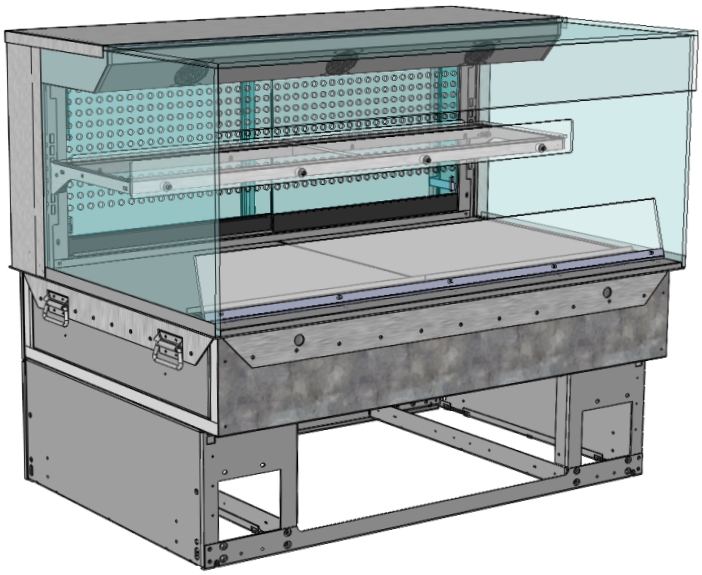

Model NR4840HSSV Free Standing Unit With Rear Sliding Doors Shown WITHOUT Front/Side/Rear Cladding And Toe-Kick Attached

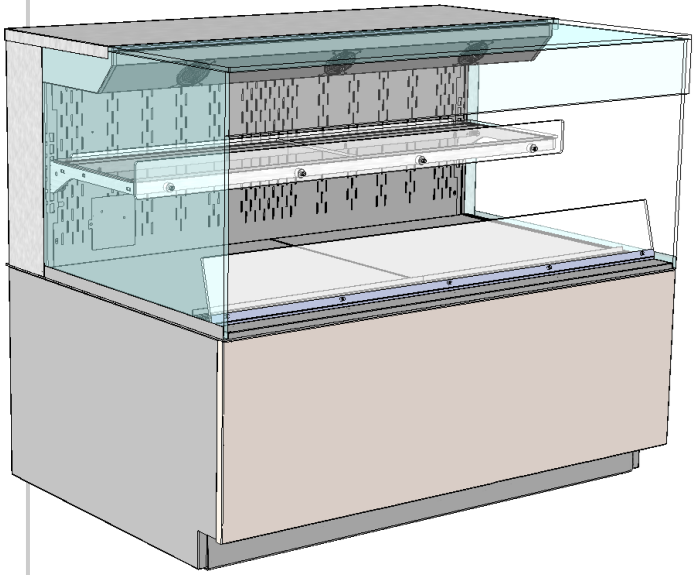

Model NR4840HSSV Free Standing Unit With Solid Back Shown WITH Front/Side/Rear

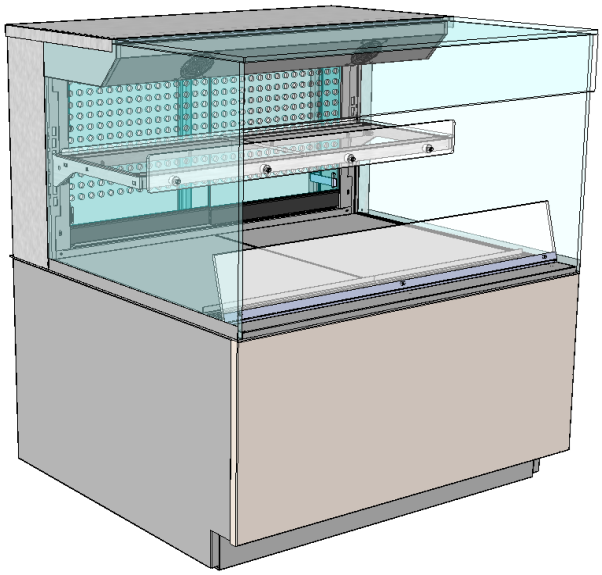

Model NR3640HSSV Free Standing Unit With Rear Sliding Doors Shown WITH Front/Side/Rear Cladding and Toe-Kick Attached

Structural Concepts®
DELIVERING FRESH. ALWAYS.™ Structural Concepts Corp. · 888 E. Porter Rd · Muskegon, MI 49441 Phone: 231.798.8888 Fax: 231.798.4960 · www.structuralconcepts.com

TABLE OF CONTENTS

TABLE OF CONTENTS 2

REVEAL® FREE STANDING HEATED SELF-SERVICE MODEL APPLICABILITY & DIMENSIONS 3

OVERVIEW / DISPLAY TYPE I vs. II / COMPLIANCE / WARNINGS / PRECAUTIONS 4-5

INSTALLATION: TOE-KICK REMOVAL / DISCONNECTING CASE FROM SKID 6
INSTALLATION, CONT'D.: CASTER ADJUSTMENT / LOCK / UNLOCK / CASE REMOVAL FROM SKID 7
INSTALLATION, CONT'D: SHELVING ASSEMBLY COMPONENTS 8
INSTALLATION, CONT'D: PLUG IN UNIT / TURN ON MAIN POWER SWITCH AND LED LIGHTS SWITCH 9
INSTALLATION, CONT'D: ATTACHING FRONT PANEL COMPONENTS 10
INSTALLATION, CONT'D: ATTACHING SIDE PANELS AND REAR UPPER/LOWER PANELS 11

CASE DESIGN & FIELD SERVICE PARTS LIST: CASE FRONT VIEW 12
CASE DESIGN & FIELD SERVICE PARTS LIST, CONT'D: CASE REAR VIEW 13
CASE DESIGN & FIELD SERVICE PARTS LIST, CONT'D: ELECTRICAL BOX COMPONENTS 14
CASE DESIGN & FIELD SERVICE PARTS LIST, CONT'D: HEATER / DECKS / BAFFLE / AIR DEFLECTOR 15
CASE DESIGN & FIELD SERVICE PARTS LIST, CONT'D: SHELVING ASSEMBLY COMPONENTS 16
CASE DESIGN & FIELD SERVICE PARTS LIST, CONT'D: LED LIGHT / PLUG / THERMOMETER .. 17
CASE DESIGN & FIELD SERVICE PARTS LIST, CONT'D: REAR PIKE DOORS / PERFORATED PLENUM DOORS 18

CASE STARTUP / HEATER SETTINGS / LIGHTS SWITCH / SHUTTING DOWN CASE 19

PRODUCT PLACEMENT / AIRFLOW CONSIDERATION / LOAD LINES 20

CLEANING SCHEDULE (TO BE PERFORMED BY STORE PERSONNEL) 21

PREVENTIVE MAINTENANCE (TO BE PERFORMED BY TRAINED SERVICE PROVIDER) 22

TROUBLESHOOTING (TO BE PERFORMED BY STORE PERSONNEL ONLY) 23-24
TROUBLESHOOTING (TO BE PERFORMED BY TRAINED SERVICE PROVIDERS ONLY) 25-26

SERIAL LABEL INFORMATION & LOCATION 27

PROGRAMMABLE CONTROLLER INFORMATION 28

TECHNICAL SERVICE CONTACT INFORMATION / WARRANTY INFORMATION 29

REVEAL® FREE STANDING HEATED SELF-SERVICE MODEL APPLICABILITY & DIMENSIONS

Model	Upper Display Height	Overall Height	Case Depth x Length
NR3633HSSV	13 5/8”UDH	32 7/8”OH	33”D x 35 3/4”L
NR3640HSSV	20 3/8”UDH	39 5/8”OH	33”D x 35 3/4”L
NR3647HSSV*	27 7/8”UDH	47 1/8”OH	33”D x 35 3/4”L
NR3655HSSV*	35 1/4”UDH	54 5/8”OH	33”D x 35 3/4”L
NR4833HSSV	13 5/8”UDH	32 7/8”OH	33”D x 47 3/4”L
NR4840HSSV	20 3/8”UDH	39 5/8”	33”D x 47 3/4”L
NR4847HSSV*	27 7/8”UDH	47 1/8”OH	33”D x 47 3/4”L
NR4855HSSV*	35 1/4”UDH	54 5/8”OH	33”D x 47 3/4”L

*Taller units have a heater rod and additional fans in upper section of merchandiser.

OVERVIEW

- These Structural Concepts Reveal® heated cases are designed to hold pre-heated, perishable, packaged foods at 140 °F to 180 °F (60 °C to 82 °C).
- Cases should be installed and operated according to this operating manual's instructions to insure proper performance. Improper use will void warranty.
- ***Product must be pre-heated before placing in merchandiser. This case is NOT designed to heat product from cold or ambient conditions.***
- All heating elements are thermostat controlled for individual adjustment.

THERMOMETER

- Thermometers in equipment reflect internal air temperature only (not actual food temperature).
- Use probe thermometers to determine actual product temperatures.

COMPLIANCE

- Performance issues when in violation of applicable NEC, federal, state and local electrical and plumbing codes are not covered by warranty. See below.

WARNINGS

- Please read the important warnings in this document carefully as they can prevent injury or death.
- See next page for ***PRECAUTIONS***.

ATTENTION CONTRACTORS

COMPLIANCE

This equipment MUST be installed in compliance with all applicable NEC, federal, state and local electrical and plumbing codes.

WARNING

ELECTRICAL HAZARD

WARNING

Risk of electric shock. Disconnect power before servicing unit. CAUTION! More than one source of electrical supply may be employed with units that have separate circuits.
Disconnect ALL ELECTRICAL SOURCES before servicing.

WARNING

HOT SURFACE

WARNING

Decks and shelves may be hot! Disconnect and allow to cool before cleaning or removing from case.

WARNING: This product can expose you to chemicals, including Urethane (Ethyl Carbamate), which are known to the state of California to cause cancer and birth defects or other reproductive harm. For more information go to P65Warnings.ca.gov.

PRECAUTIONS

- Following are important precautions to prevent damage to unit or merchandise.
- Please read carefully!

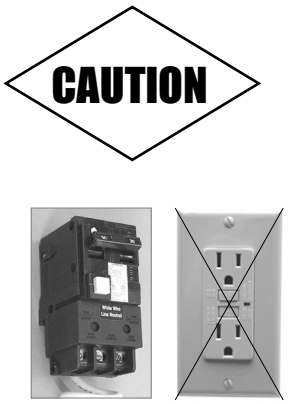

CAUTION! LAMP REPLACEMENT GUIDELINES
LED lamps reflect specific size, shape and overall design.
Any replacements must meet factory specifications.

CAUTION! GFCI BREAKER USE REQUIREMENT
If N.E.C. (National Electric Code) or your local code requires GFCI (Ground Fault Circuit Interrupter) protection, you MUST use a GFCI breaker in lieu of a GFCI receptacle.

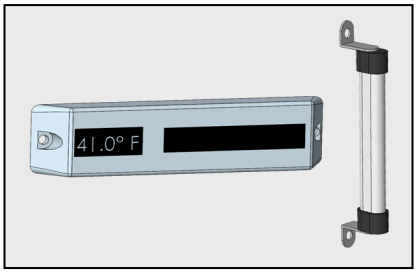

CAUTION!
DO NOT RELY ON THERMOMETERS OR THERMOSTATS FOR ACTUAL PRODUCT (FOOD) TEMPERATURES.

- **Thermometers and thermostats reflect air temperatures ONLY.**
- **For PRECISE food temperatures, use calibrated food thermometers ONLY.**

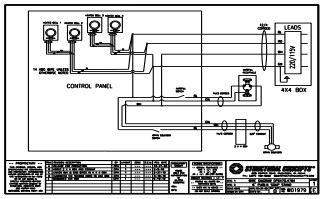

WIRING DIAGRAM FORMAT & LOCATION

- **Each case has its own wiring diagram folded & in its own packet.**
- **Wiring diagram placement may vary; it may be placed near field wiring box, raceway, or other related location.**

CAUTION!

- **To prevent sagging or breakage, do not exceed 5 LBS (2.3 KG) weight load per top glass section (between vertical supports).**
- **To prevent scratching or marring, do not place ANY items on glass.**

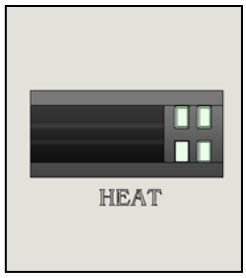

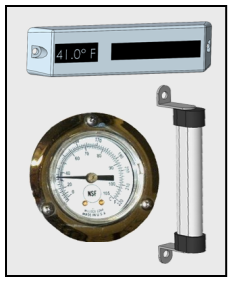

CAUTION!
DO NOT RELY ON THERMOMETERS OR THERMOSTATS FOR ACTUAL PRODUCT (FOOD) TEMPERATURES.

- **Thermometers & thermostats reflect air temperature ONLY.**
- **For ACTUAL food temperatures, use a calibrated food thermometer.**

1. Remove Front Toe-Kick From Case

- To prevent damage to case, remove front toe-kick from case before removing from Skid.
- Toe-kick is held in place by magnets only. No screw removal is required.
- Place front toe-kick in secure location while removing case from Skid.

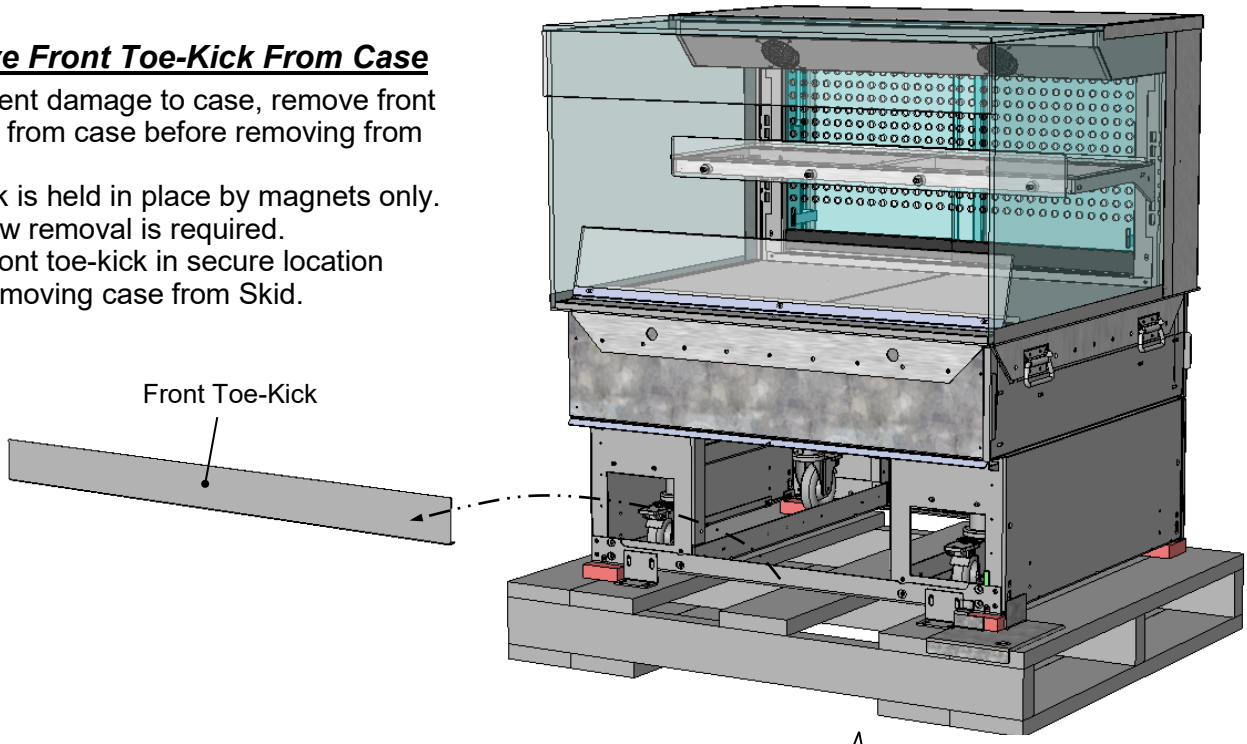

2. Disconnect Case From Skid

- Remove screws from shipping brackets. Remove and discard shipping brackets from Skid.
- Place J-bar/pry under base frame. Raise case up from Skid to take weight off casters.
- With case raised, lower casters all the way down against Skid (see next step for detailed instructions on lowering or raising casters).
- Remove rubber shipping blocks.

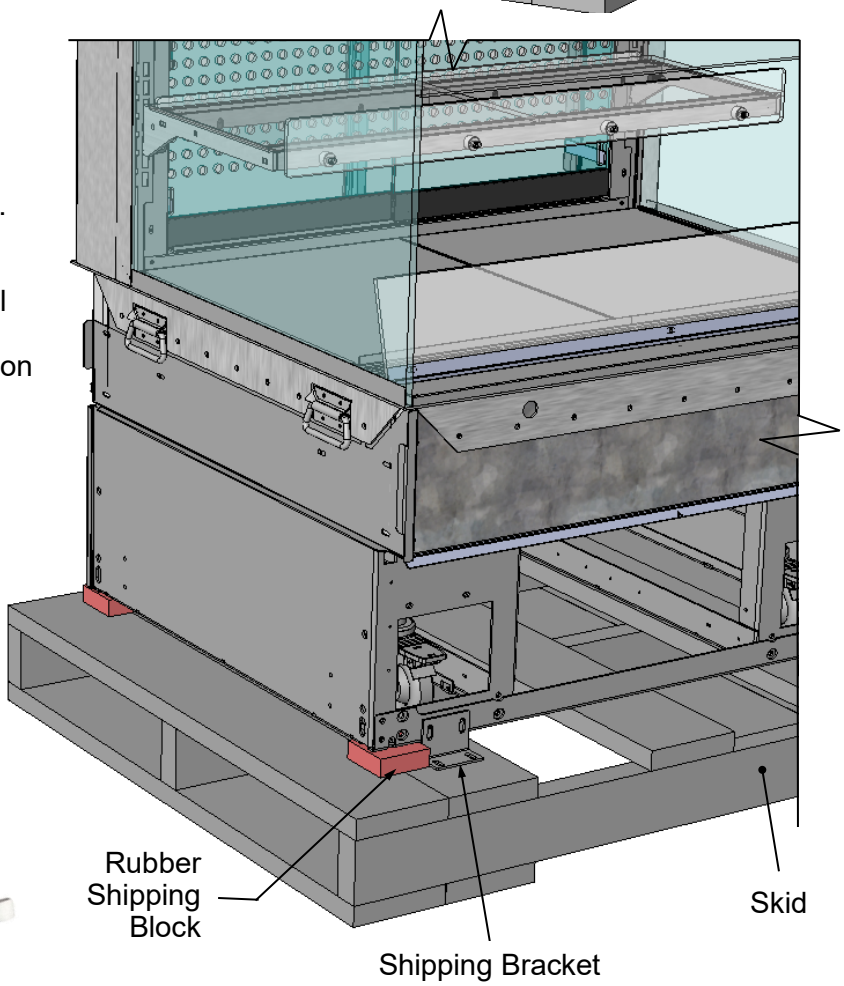

3. Caster Height: Raising and Lowering

- Raise or lower casters (to adjust case height) by rotating casters' vertical adjustment rings.
  - Rotate vertical adjustment ring clockwise to lower caster (and increase height of case).
  - Rotate vertical adjustment ring counter-clockwise to raise caster (and decrease height of case).

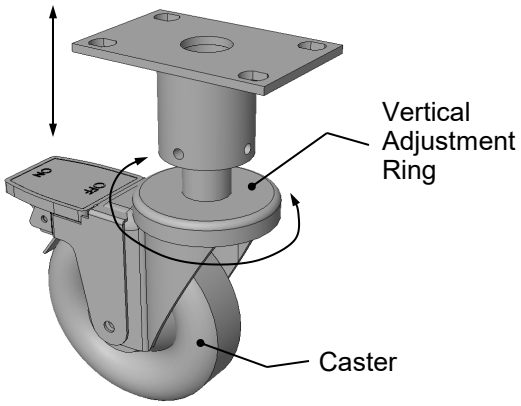

4. Caster Rolling Capability: Unlocking

- Important! Case is shipped with caster mechanisms factory set at **ON** (locked) to prevent case from rolling.
- Unlock casters by pressing **OFF** on the caster mechanism.
- See illustration at right.

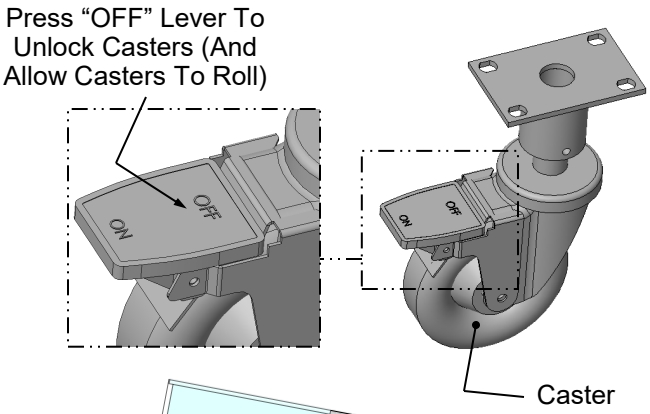

5. Carefully Remove Case From Skid

- Check that casters are lowered as far down as they will go (as instructed in step #4).
- Use handles to carefully slide case to rear of Skid (see illustration at right).
- ***Caution! 4 people may be required for this task!***
- Carefully lower to floor (using ramp if available).
- Slide Skid from under case as required.
- Maintain support of case at all times or center of gravity may cause case to fall.
- See illustration at right.

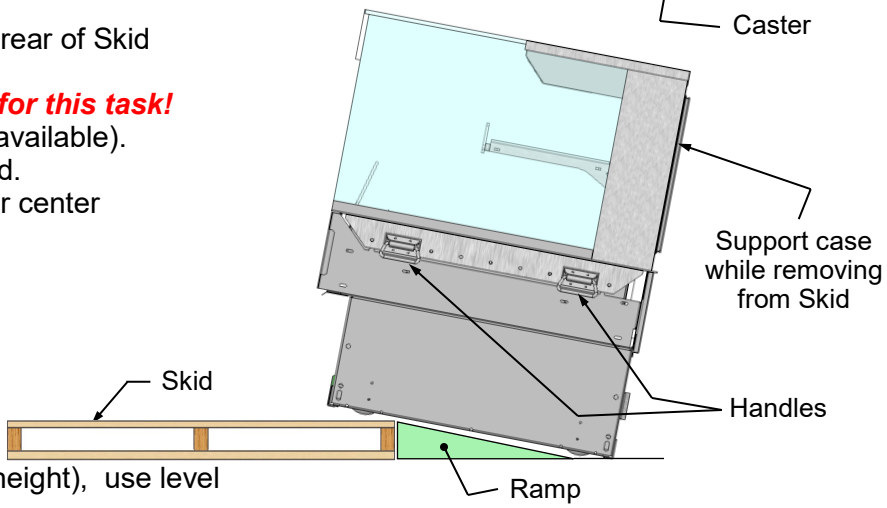

6. Casters: Locking

- After case is at desired position (and height), use level to check that case is level and plumb.
- Readjust height as needed (as instructed in step #4).
- Locking Height: After proper height (and positioning) of case is attained, tighten the two (2) set screws to lock each caster's height in place.
- Locking Movement: Then, to prevent casters' rolling capability, lock casters by pressing ON atop the "ON" and "OFF" lever mechanism (shown at right). Case will now be secured at its new location.

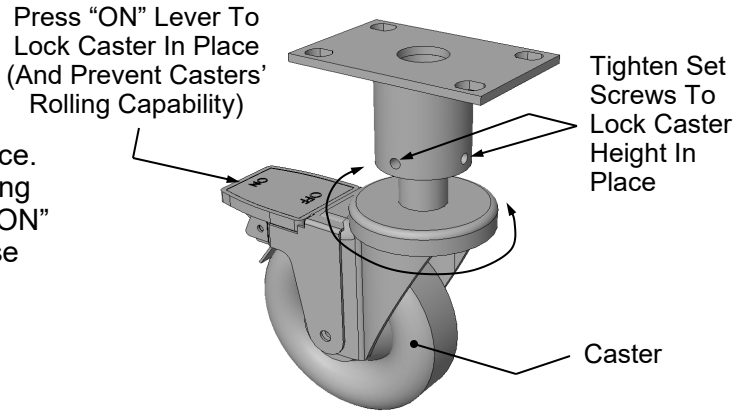

7. Shelving Assemblies

- Shelving retainer clips help secure shelves during shipping
- ***After case is in place & level (before startup), you must remove shelving retainer clips. See illustration below.***
- Check that glass shelving is in proper position before placing product in case
- Shelves may be adjusted vertically or entirely removed from merchandiser.
- Metal shelving brackets ARE NOT able to be angled.

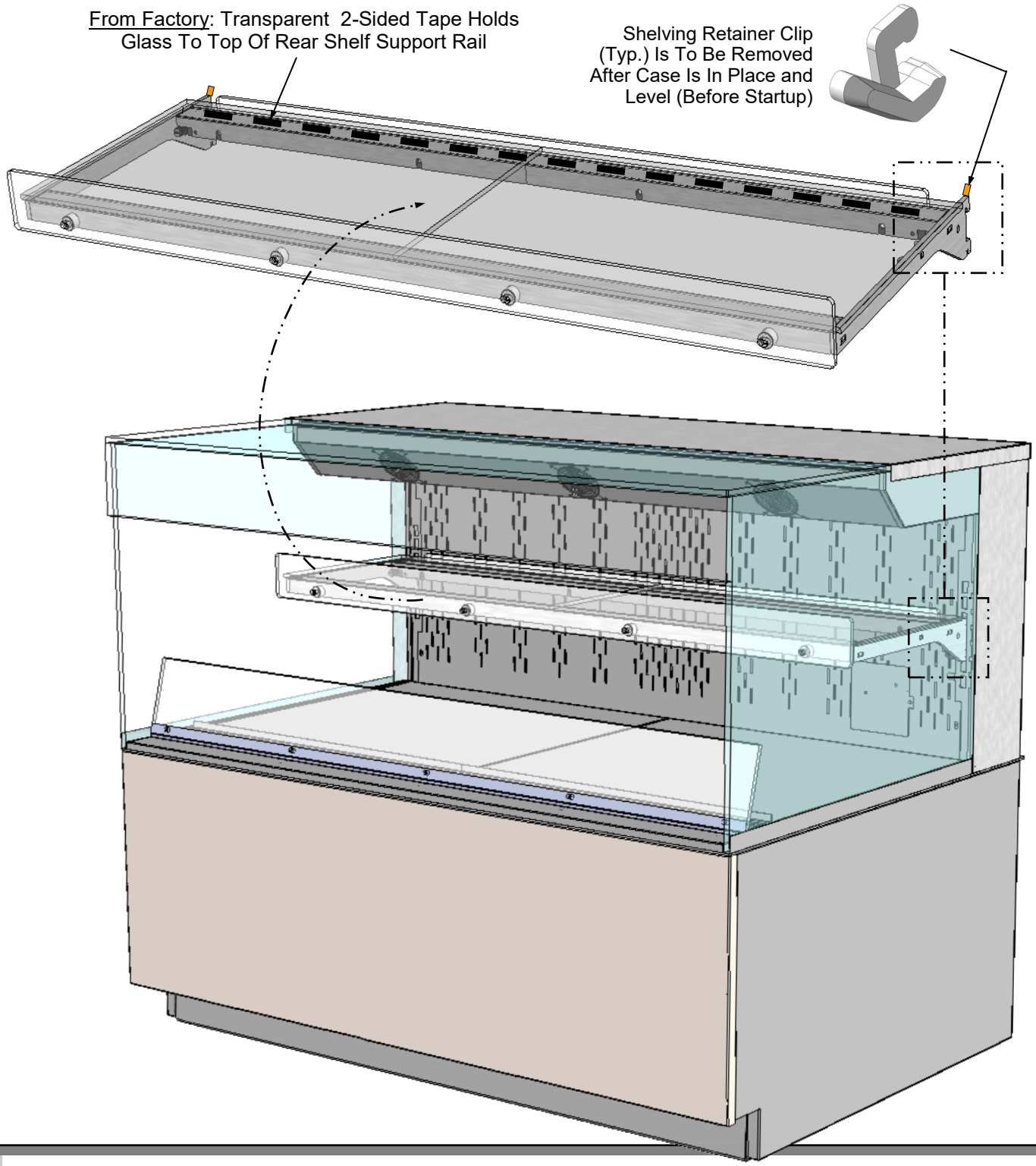

8. Shelving Retainer Clips To Be Removed

- Important Note: If you have not done so already, after case is in place and level (before startup), your must remove shelving retainer clips.
- See previous page for illustration.

9. Plug Case In

- Check field access box for factory-supplied power cord.
- Plug case into electrical outlet.
- See enlarged illustration below-right.

10. Main Power Switch / LED Lights Switch

- Main power switch and LED lights switch is accessible at case rear electrical box.
- Turn on main power switch and LED lights switch.
- See partially-disassembled illustration below.

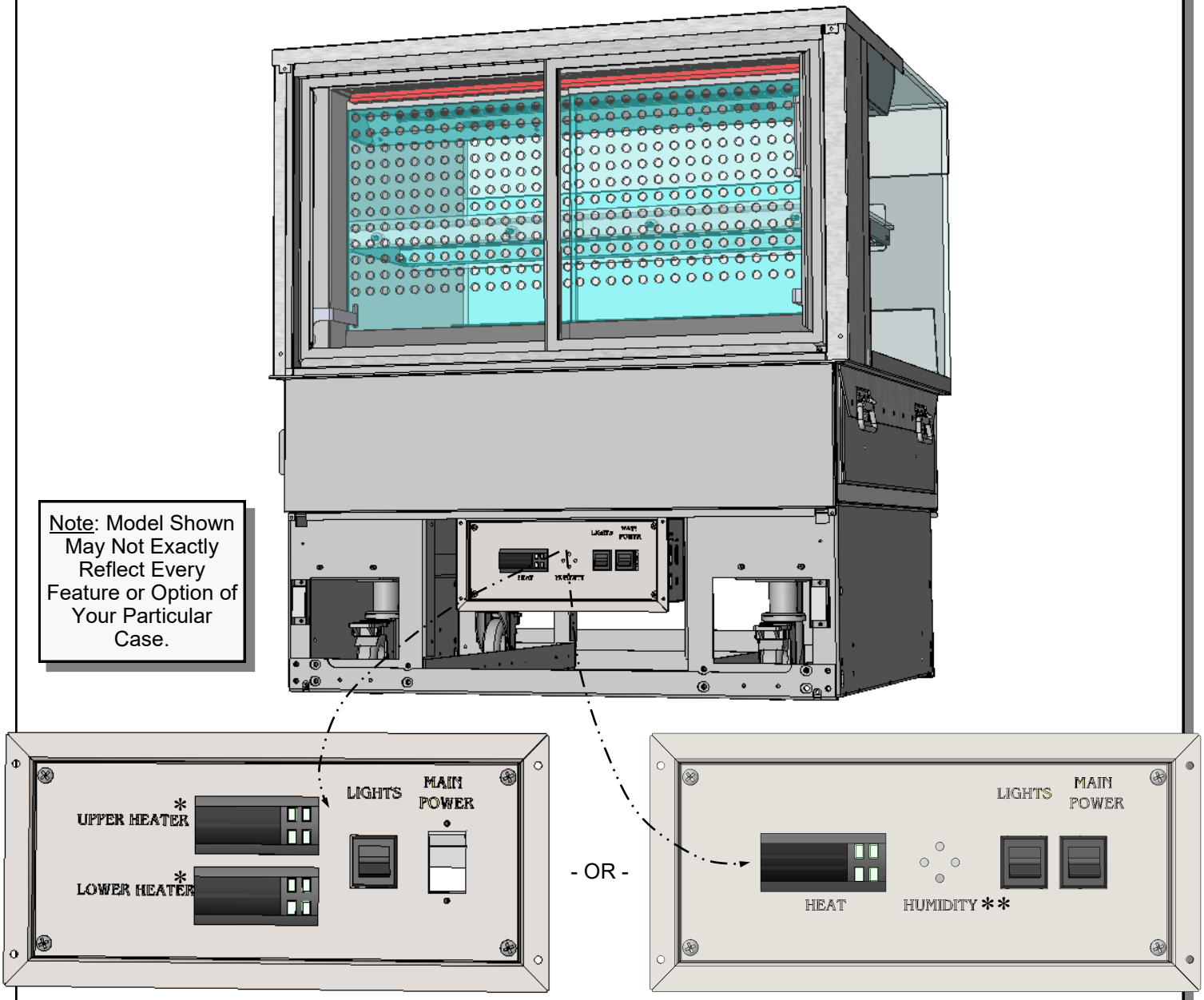

*Note: Only taller units have upper and lower heaters (with two programmable controllers). All others have only ONE heater (with ONE programmable controller).
**If "HUMIDITY" etching is on faceplate, simply ignore; such markings are not applicable to cases in manual.

11. Shipping Brace

- Shipping brace keeps case secure during shipment as well as during positioning in store.
- After case is in position, shipping brace may be removed from case front (though not required).

12. Attaching Front Panel Components

- Carefully remove components from packaging.
- Note: All front panel components may be attached to case via magnets (WITHOUT screw attachments).
- Attach front toe-kick to case (via lower magnets).
- Slide front panel horizontal support bracket into case's support slot (line up arrows).
- Then, slide front panel into case until it attaches to case via lower magnets.
- See illustration below.

13. Handles On Sides of Case

- Handles may remain on case after it has been moved into position and cladding is attached.
- However, if handles interfere with the placement of cladding, they may be removed.

*>> See Next Page For Instructions on **ATTACHING SIDE PANELS AND REAR PANELS**.*

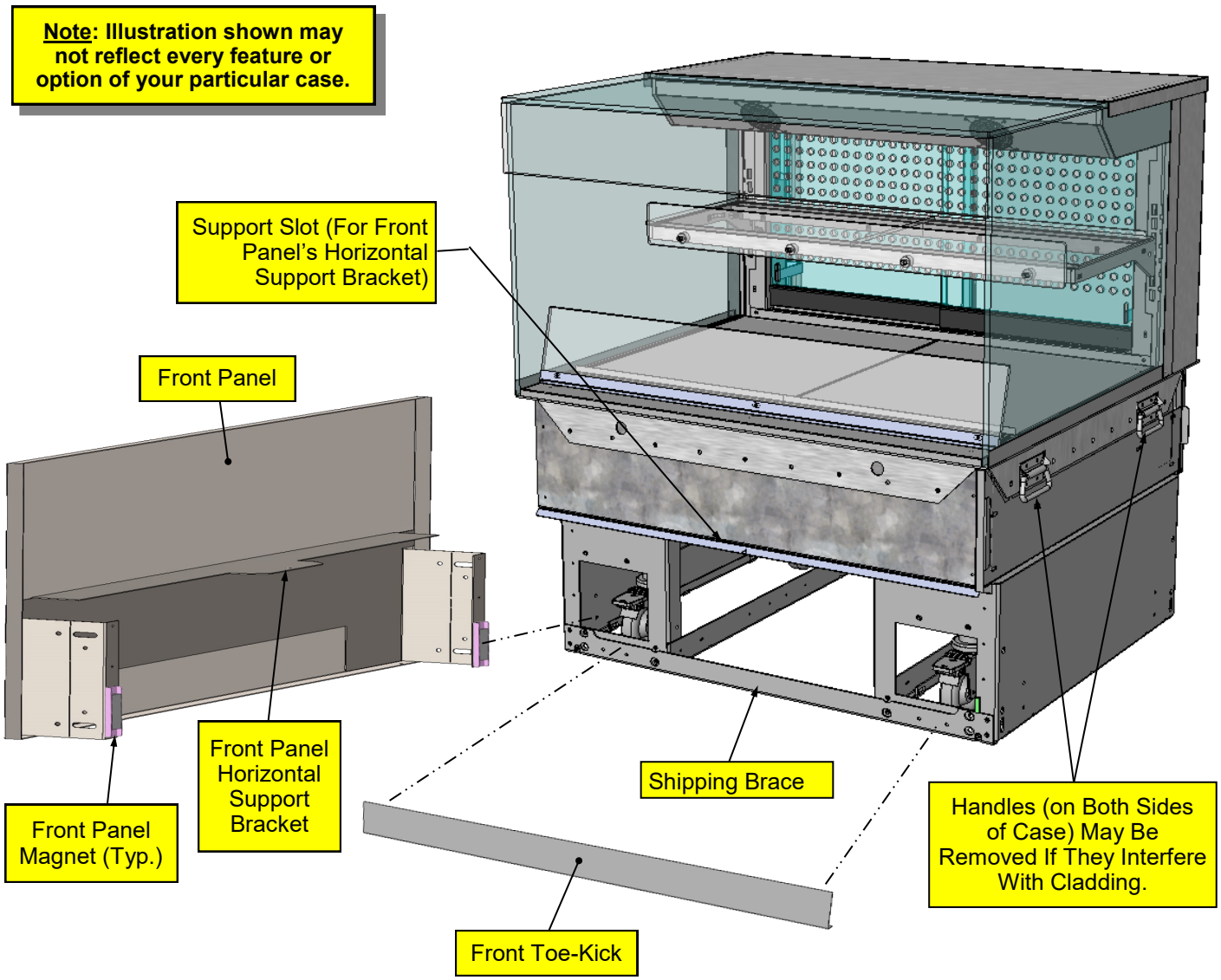

14. Attaching Side Panels

- Attach side panels to case using slot/hook method.
- Use latches at case rear to firmly attach side panels to case.
- See illustrations below.

15. Attaching Rear Upper Panel

- Place rear upper panel onto care rear.
- Four (4) magnets will hold it firmly in place.
- See illustration below

16. Attaching Rear Lower Panel

- Use finger holes to place rear panel onto lower rear of case. Magnets will hold it firmly in place.

>> Note: Components may be removed in reverse order they were shown being attached on this sheet.

Note: Illustration shown may not reflect every feature or option of your particular case.

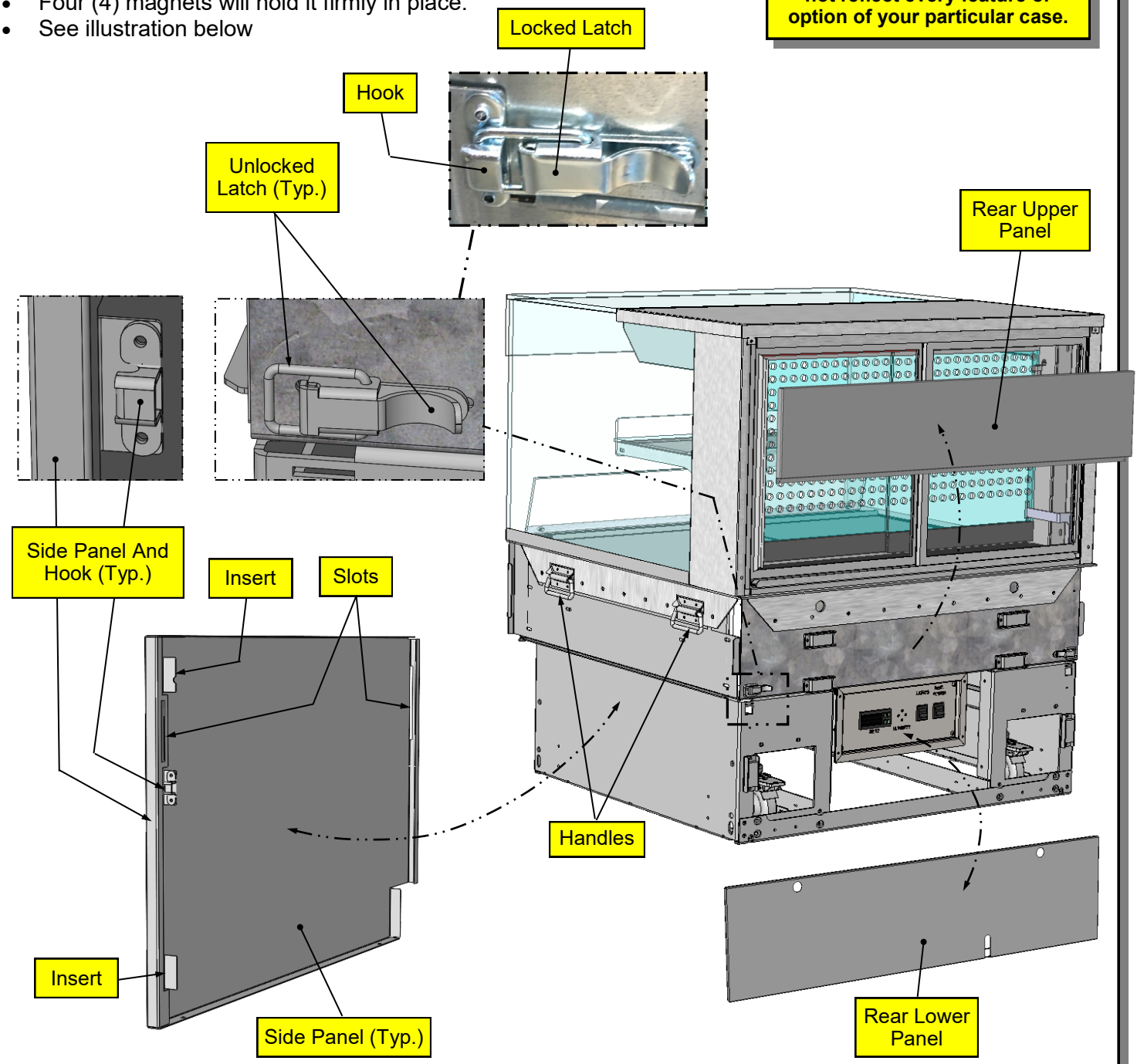

1. Case Front View

- Model NR3640HSSV with rear sliding doors is illustrated below.
- Solid back units differ from unit shown.

Model NR3640HSSV Free-Standing Unit (Shown) May Not Exactly Reflect Every Feature or Option of Your Particular Case.

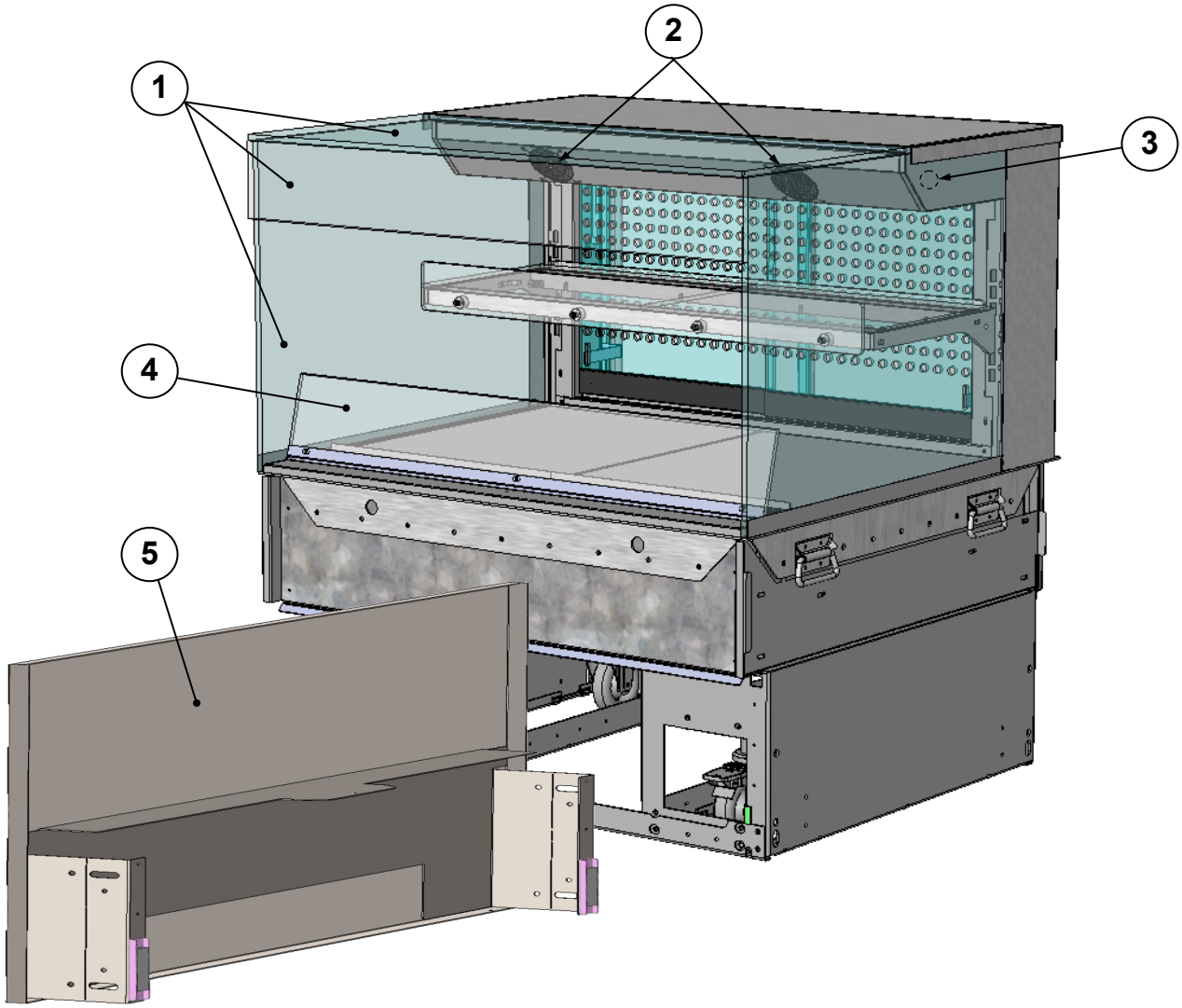

FIELD SERVICE PARTS LIST: CASE FRONT VIEW					
P/N	COMPONENT NAME	AMT	P/N	COMPONENT NAME	AMT
1	UV-BONDED GLASS ASSEMBLY	1	4	AIR DEFLECTOR	1
2	FAN (IN UPPER AIRFLOW SYSTEM)*	5*	5	FRONT PANEL ASSEMBLY	1
3	HEATER ROD**	1			

*Number of fans vary depending upon model.
**Note: Only taller models have a heater rod (accompanied by a separate programmable controller).

2. Case Rear View

- Model NR3640HSSV with rear sliding doors is illustrated below.
- Solid back units differ from unit shown.

Model NR3640HSSV Free-Standing Unit (Shown) May Not Exactly Reflect Every Feature or Option of Your Particular Case.

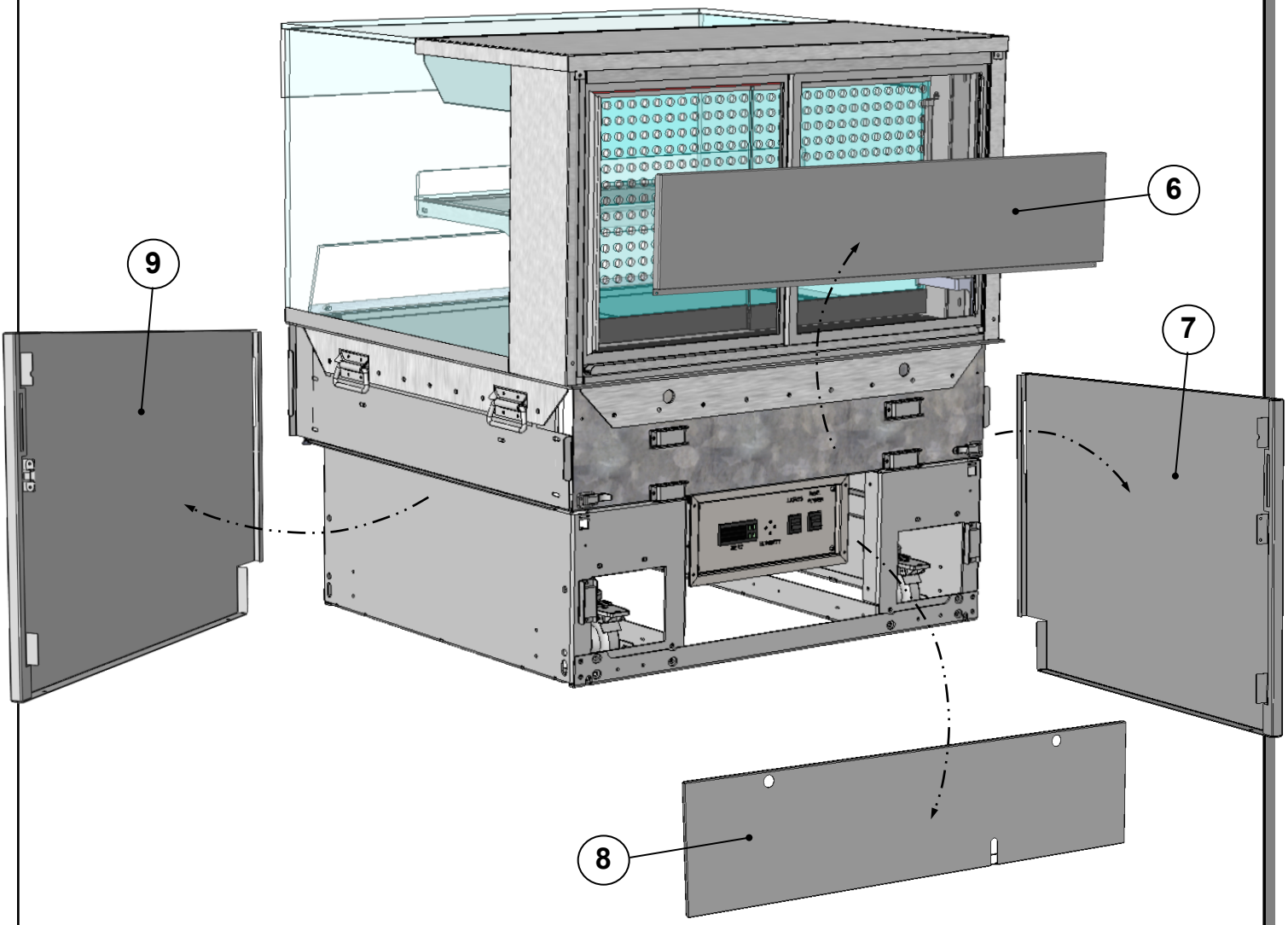

FIELD SERVICE PARTS LIST: CASE REAR VIEW					
P/N	COMPONENT NAME	AMT	P/N	COMPONENT NAME	AMT
6	REAR UPPER PANEL	1	9	REAR-LEFT SIDE PANEL	1
7	REAR-RIGHT SIDE PANEL	1			
8	REAR LOWER PANEL	1			

3. Thermostat / LED Driver / Lights / Main Power Switch

- Remove rear lower panel by lifting up and off; no screw removal is required.
- Remove 4 screws from the controller/DC driver box cover to access electrical components.
- Note: Only certified electricians are to access electrical components in case.
- After accessing controller, return components to case in reverse order they were removed.

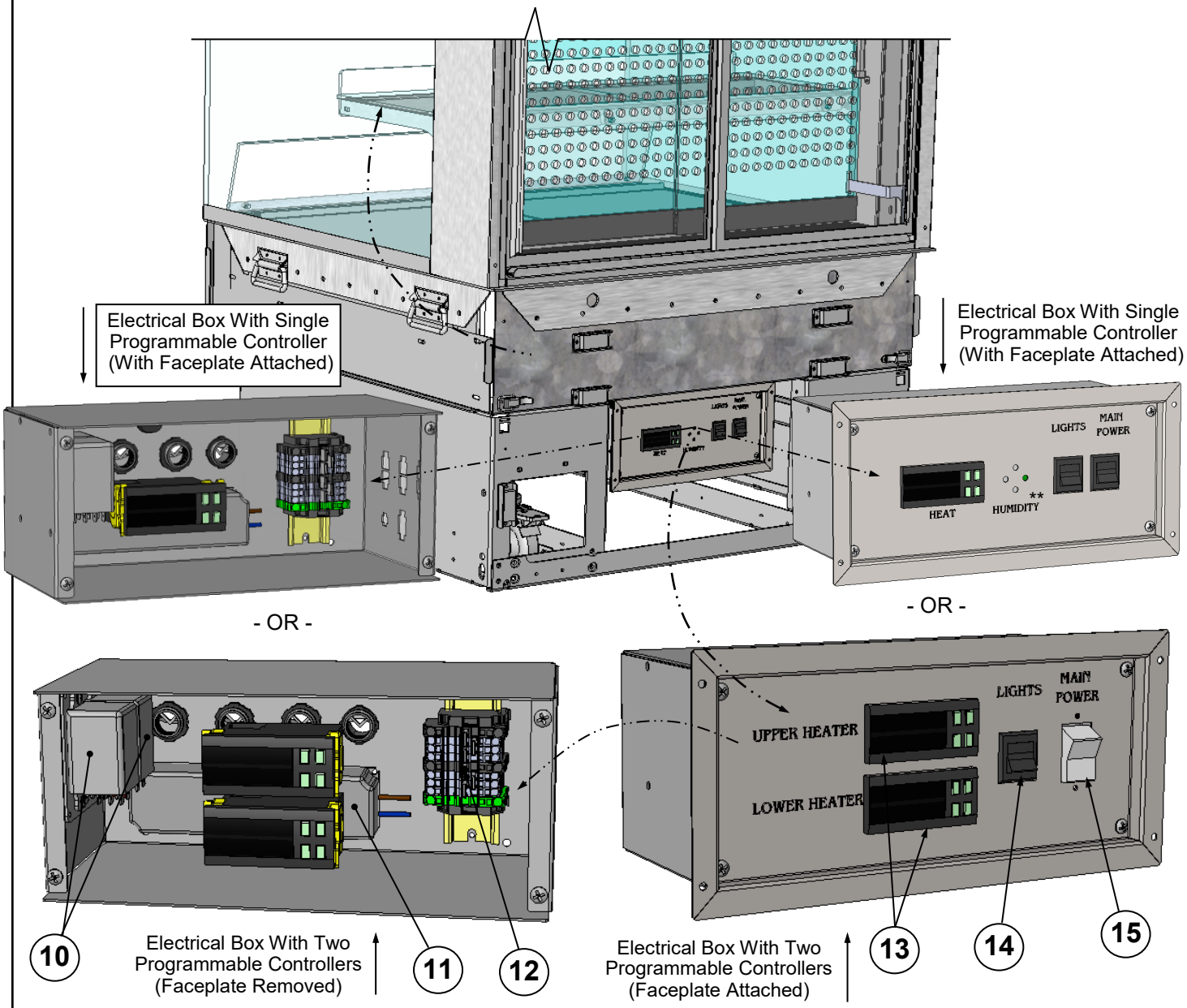

FIELD SERVICE PARTS LIST: ELECTRICAL BOX COMPONENTS					
P/N	COMPONENT NAME	AMT	P/N	COMPONENT NAME	AMT
10	RELAYS	2	13	PROGRAMMABLE CONTROLLERS	2*
11	DRIVER	1	14	LIGHTS SWITCH	1
12	TERMINAL STRIP	1	15	MAIN POWER SWITCH	1

* Note: Only taller models have upper AND lower heaters (requiring two programmable controllers). All others have only ONE heater (with ONE programmable controller).

4. Tub Area Access / Heater / Airflow Baffle & Deflector

Caution! Turn main power off before accessing heater components.

- To access tub area (including heater) remove sub-deck and deck pans. No screw removal is required.
- After cleaning or servicing, return sub-deck & deck pans to case.
- Restore power to case.

Model Shown May Not Exactly Reflect Every Feature or Option of Your Particular Case.

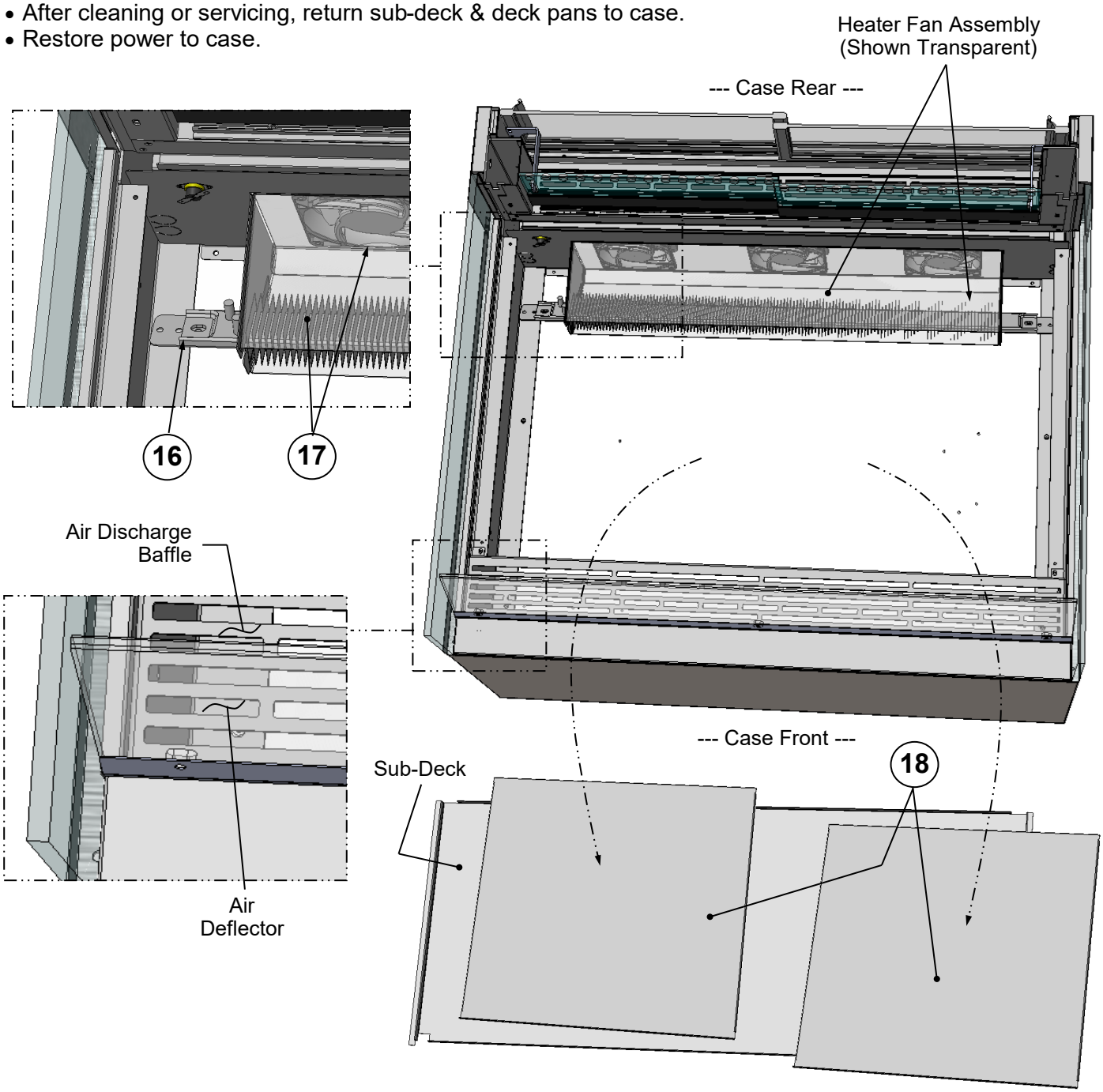

FIELD SERVICE PARTS LIST: HEATER / DECKS / BAFFLE / AIR DEFLECTOR					
P/N	**COMPONENT NAME**	**AMT**	**P/N**	**COMPONENT NAME**	**AMT**
16	HEATER STRIP	2	18	DECK PAN	2
17	HEATER FAN (HOUSING SHOWN X-PARENT)	3*			

*Number may vary depending upon model.

5. Shelf Assembly Components

- ***Note*: After case is in place & level (before startup), remove shelfing retainer clips (sample clip shown below-right).**
- Check that glass shelving is in proper position before placing product in case
- Shelves may be adjusted vertically or entirely removed from merchandiser.
- Metal shelving brackets ARE NOT able to be angled. They are at a fixed 90° position.
- These components comprise EACH shelf assembly.

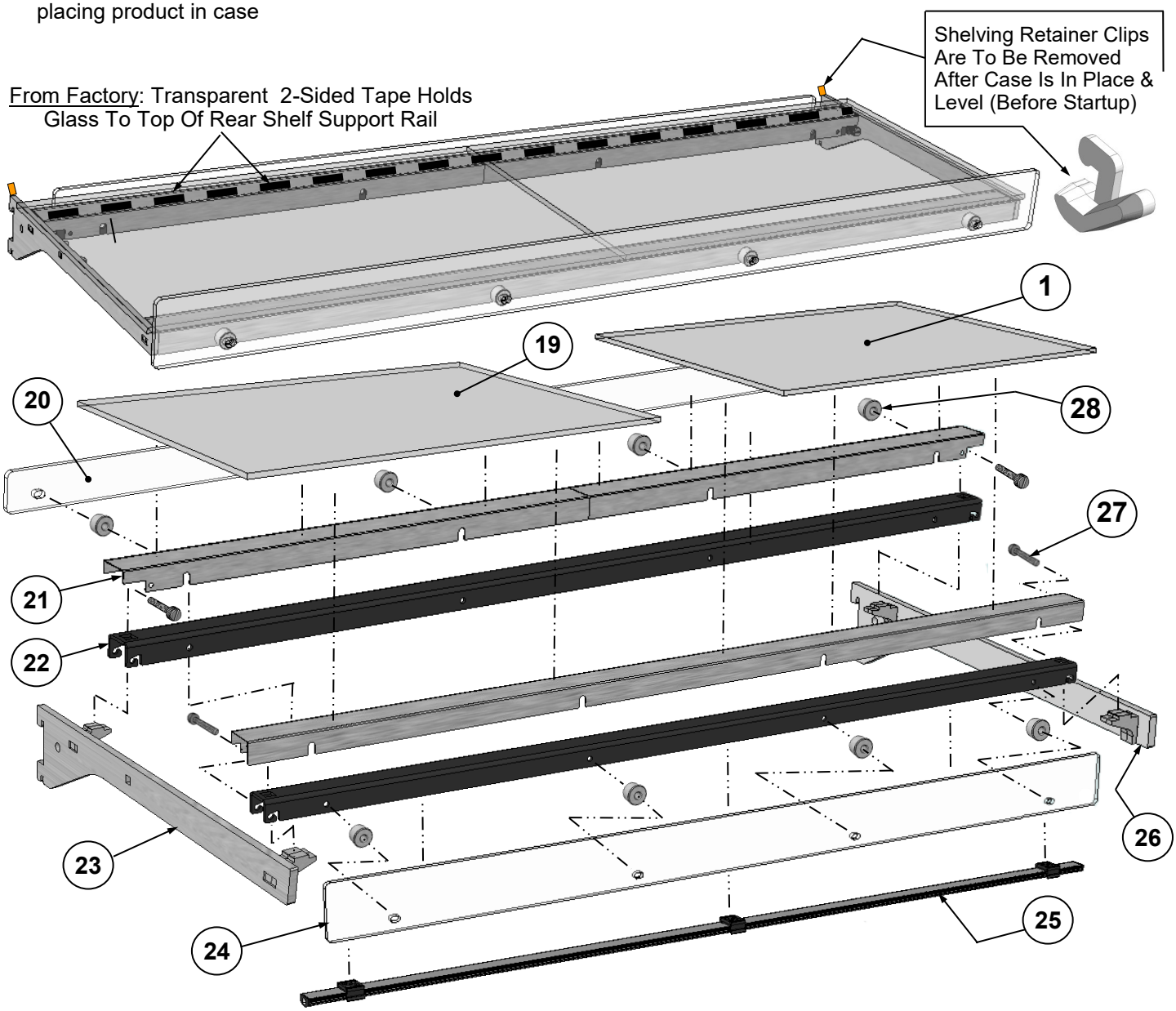

FIELD SERVICE PARTS LIST: SHELVING ASSEMBLY COMPONENTS					
P/N	COMPONENT NAME	AMT	P/N	COMPONENT NAME	AMT
19	GLASS, LEFT/RIGHT HAND	2	24	SHELF GUARD, FRONT POLYCARBONATE*	1
20	SHELF GUARD, REAR POLYCARBONATE*	1	25	LIGHT, LED	1
21	SHELF SUPPORT RAIL, OUTER**	2	26	BRACKET, RIGHT HAND	1
22	SHELF SUPPORT RAIL, INNER	2	27	THUMB SCREW, SHELF SUPPORTS	4
23	BRACKET, LEFT HAND	2	28	BUMPER STAND	8

* Polycarbonate does NOT need to be removed to remove shelf assemblies from case.
** Assembled with shelf support rail, inner (item #22) and thumb screw (item #27) before leaving the factory.

6. LED Light

- LED lights are located at both header and shelving of case (as shown below).
- Check that ALL of the light plugs are properly connected to the LED light.
- See ***TROUBLESHOOTING*** section in manual if LED lights malfunction.

7. LED Light Plug

- LED lights are located at both header and shelving of case (as shown below).
- Check that ALL plugs are properly connected to the LED lights.
- Plug must be inserted ALL THE WAY into the LED light orifice (with no gap) to work properly.

8. Thermometer

- Thermometer provides air temperature of heated section of case.
- Thermometers DOES NOT provide actual food temperature.
- Use probe thermometer to determine actual product temperatures.

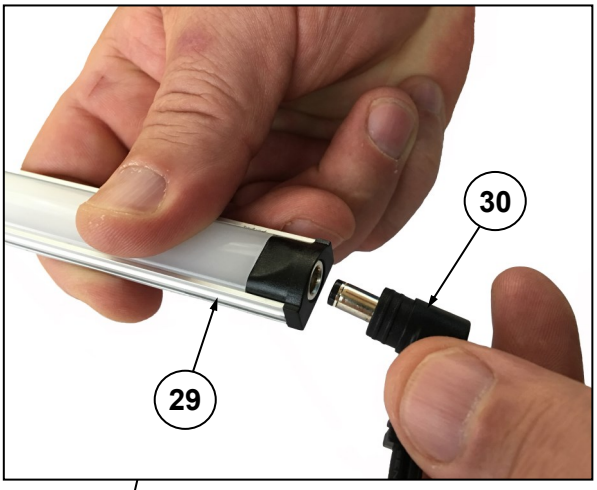

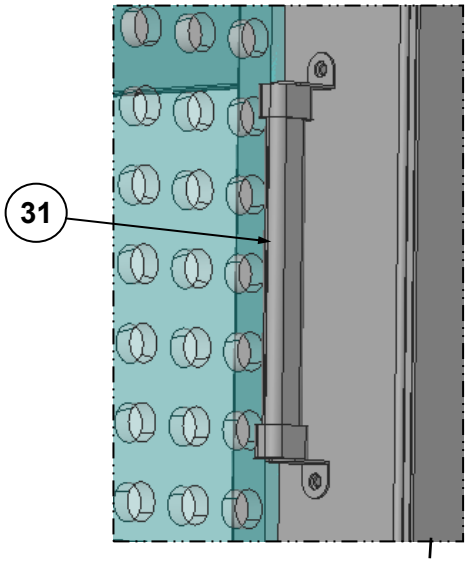

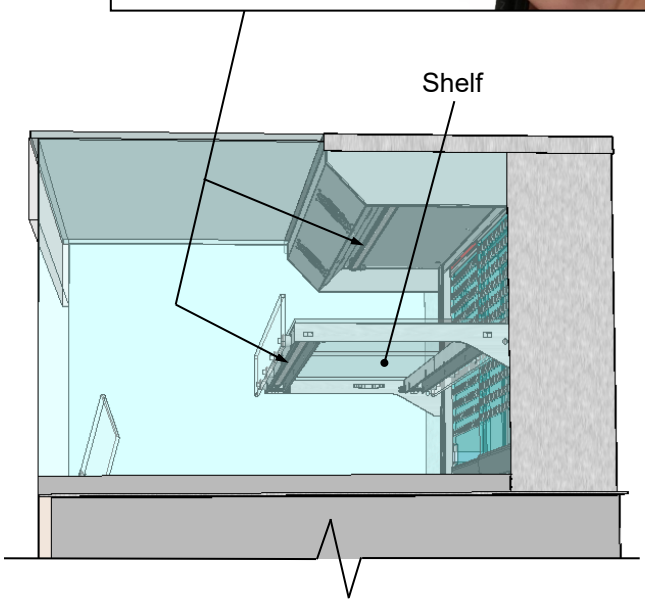

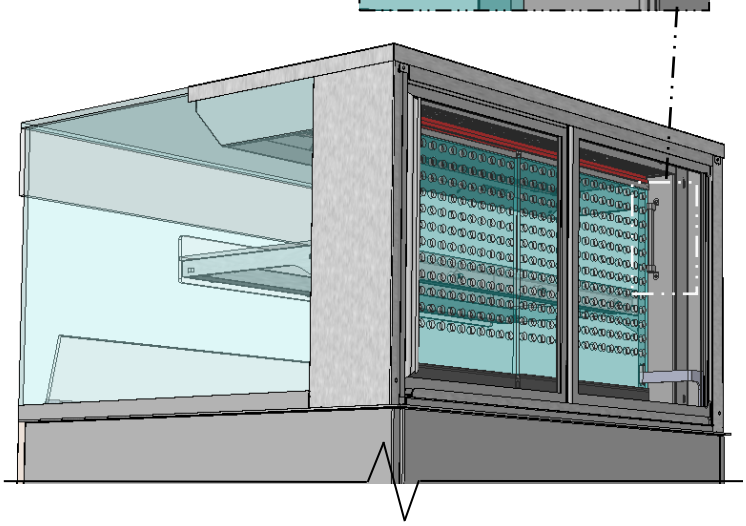

FIELD SERVICE PARTS LIST: LED LIGHTS / PLUGS / THERMOMETER					
P/N	**COMPONENT NAME**	**AMT**	**P/N**	**COMPONENT NAME**	**AMT**
29	LED LIGHT (ALSO CALLED OUT ON PREVIOUS PAGE)	1	31	THERMOMETER	1
30	PLUG, LED LIGHT	1			

9. Rear Sliding Pike Doors (With Brackets)

- Rear sliding pike doors also control perforated plenum via inner bracket (as illustrated below).
- To remove rear sliding doors, move them toward center of case.
- Individually lift each door up toward the top of the case; pivot the bottom of the door out.
- Return doors to case in reverse order they were removed.

10. Rear Sliding Inner Perforated Doors

- Rear sliding inner perforated doors are shown below.
- To remove, slide toward center of case.
- Individually lift each door up toward the top of the case; pivot the bottom of the door out.
- Return perforated doors to case in reverse order they were removed.

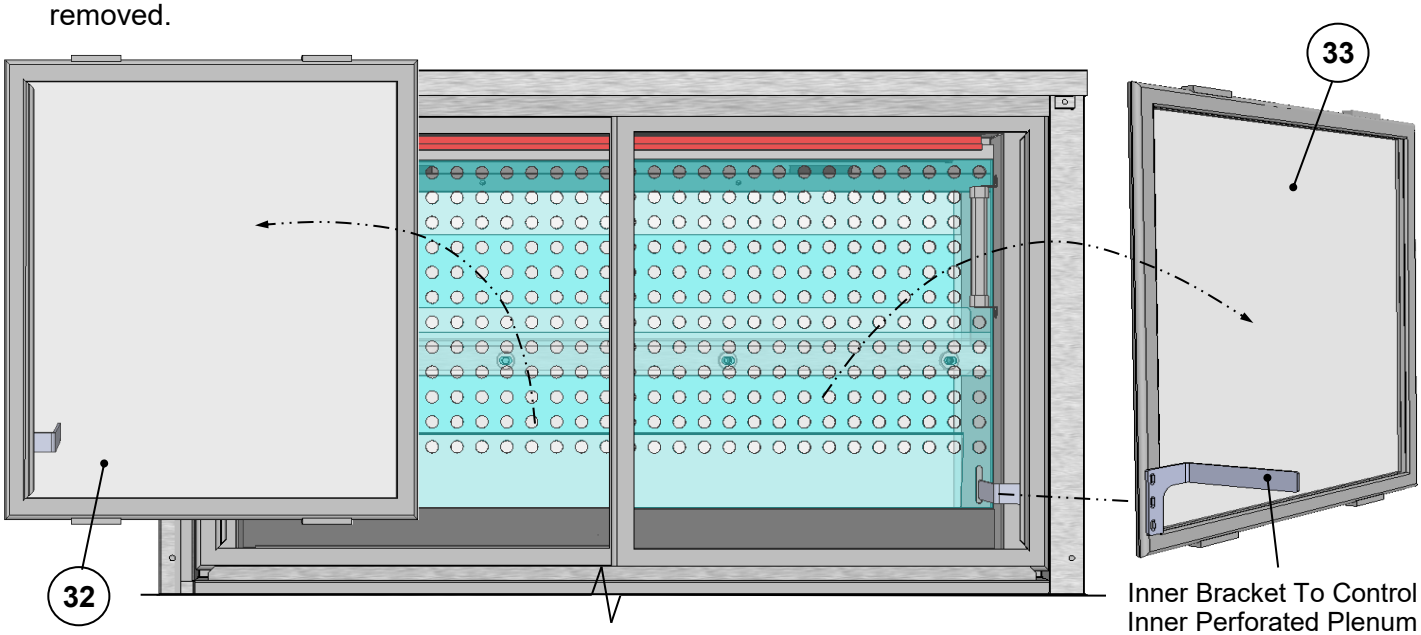

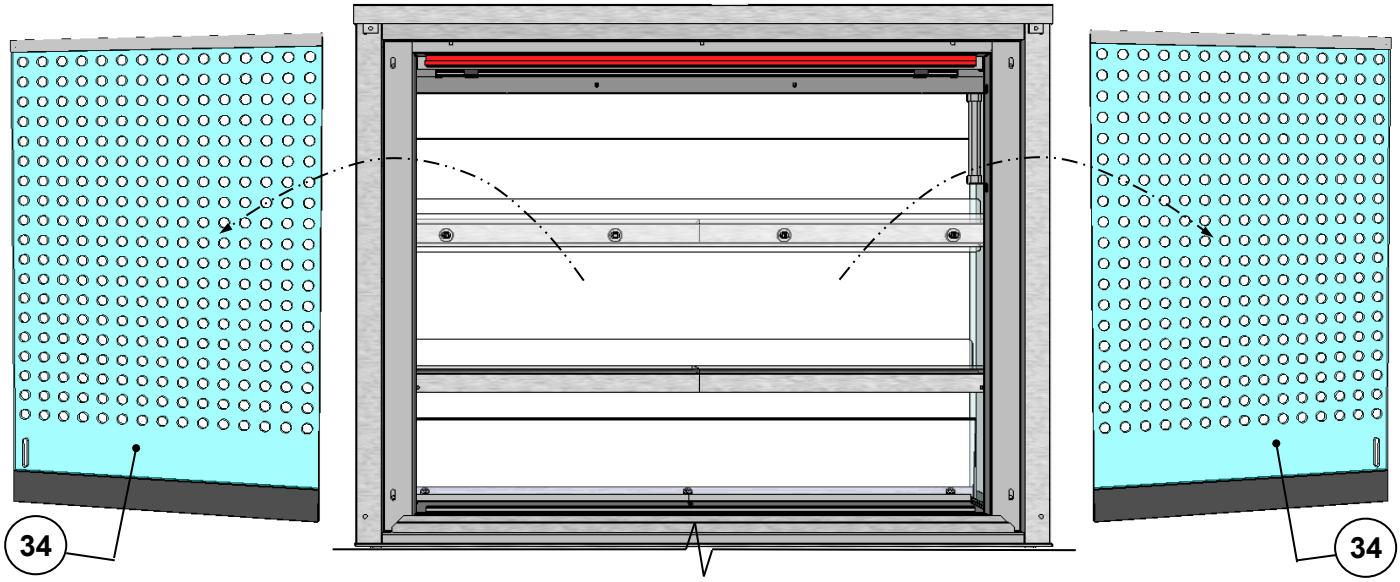

FIELD SERVICE PARTS LIST: REAR SLIDING PIKE DOORS / PERFORATED PLENUM SLIDING DOORS					
P/N	COMPONENT NAME	AMT	P/N	COMPONENT NAME	AMT
32	PIKE DOOR, OUTER WITH INNER BRACKET, REAR-LEFT	1	34	PERFORATED SLIDING DOOR, INNER	2
33	PIKE DOOR, OUTER WITH INNER BRACKET, REAR-RIGHT	1			

1. Main Power Switch

- Control panel (at case rear) is accessible after removal of lower-rear panel.
- Turn main power switch "ON" to energize case.

2. Heating Up Case / Adjusting Settings

- Note: Cases are designed to MAINTAIN product temperatures – NOT heat up product! Do not place product that is cold or ambient temperature in case.
- ***Before placing pre-heated food in case, allow 1 1/2 hours (90-minutes) for case to achieve its desired temperature.***
- If adjusting heater settings, allow 20 minutes at new settings for temperature to affect product.

3. Light Switch

- Control panel (at case rear) is accessible after removal of lower-rear panel.
- Turn lights switch "ON" to turn on lights.
- All LED lights will come on at the same time.

4. Shutting Down Case

- Remove all product from case.
- Turn main power switch to "OFF" position.
- ***Caution! Deck and shelving are hot. Allow case to cool for 45 minutes before cleaning.***
- *Note: When main power is turned back on, you do NOT need to re-enter settings. Temperatures will revert back to your LATEST SETTINGS before shutdown.*

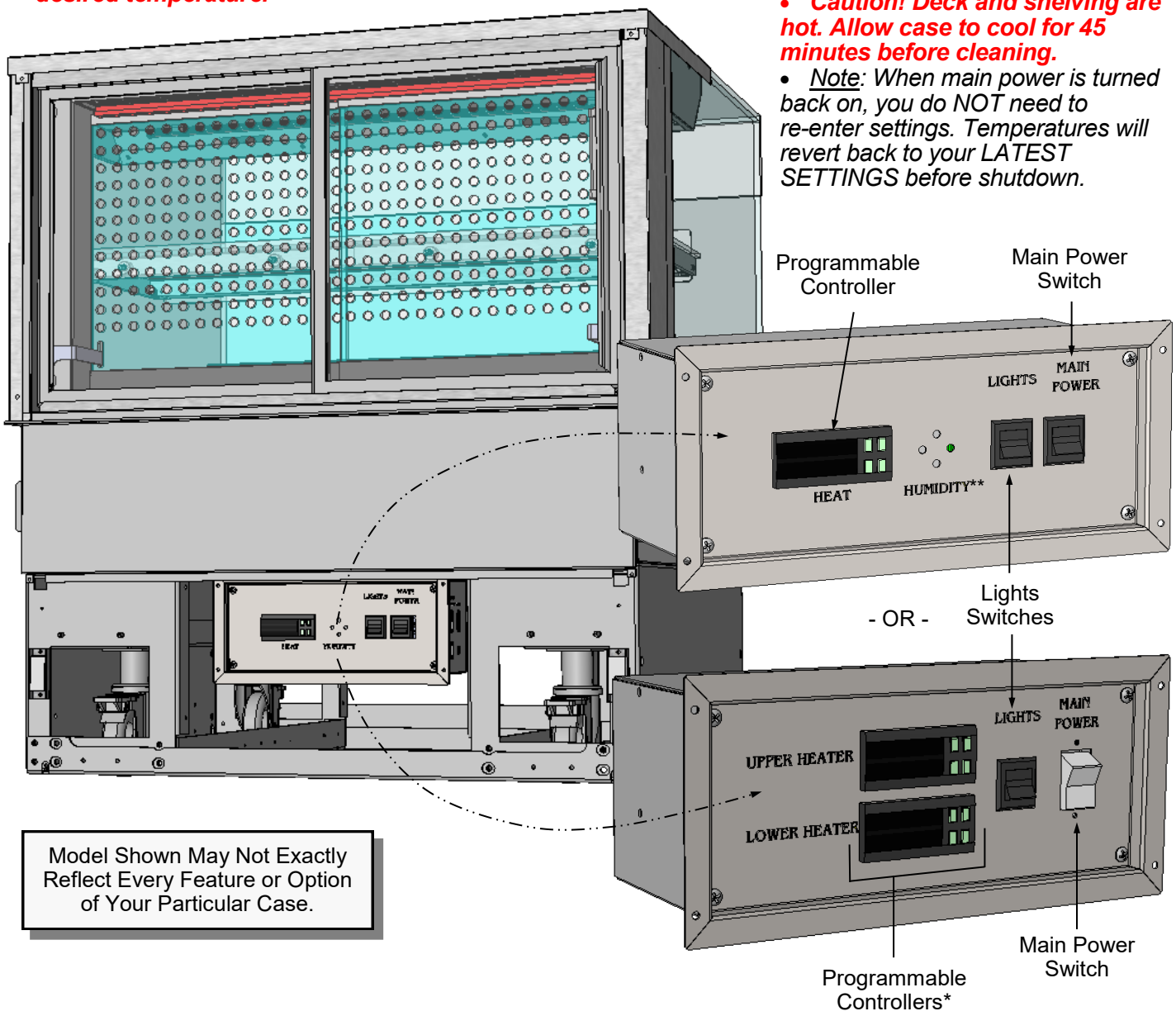

Model Shown May Not Exactly Reflect Every Feature or Option of Your Particular Case.

*Note: Only taller units have upper and lower heaters (with two programmable controllers). All others have only ONE heater (with ONE programmable controller).
**If "HUMIDITY" etching is on faceplate, simply ignore; such markings are not applicable to cases in user manual.

1. Product Placement

- Product can be placed on decking or steps (risers) within the service display area.
- A wide range of product may be displayed.

2. Air Diffuser Grille & Return Air Grille Considerations

- Proper airflow is critical to maintain proper product temperature.
- Proper product placement will allow discharged air to flow over (and around) product to the return air grille (at case rear) AS WELL AS the upper airflow circulation system. See illustration below.
- See illustration below.
- Caution! For discharged air to reach the return air grille, you must not block front OR rear grilles with product.
- Do not place product on front ledge of case.

3. Load Lines

- Load lines represent the limit that product can be place (either horizontally or vertically) and/or stacked in case.
- Keep product at or under load lines to assure that heated airflow is properly cycled from air diffuser through return air grille.
- Proper product placement will maintain acceptable product temperature.
- See illustration below.

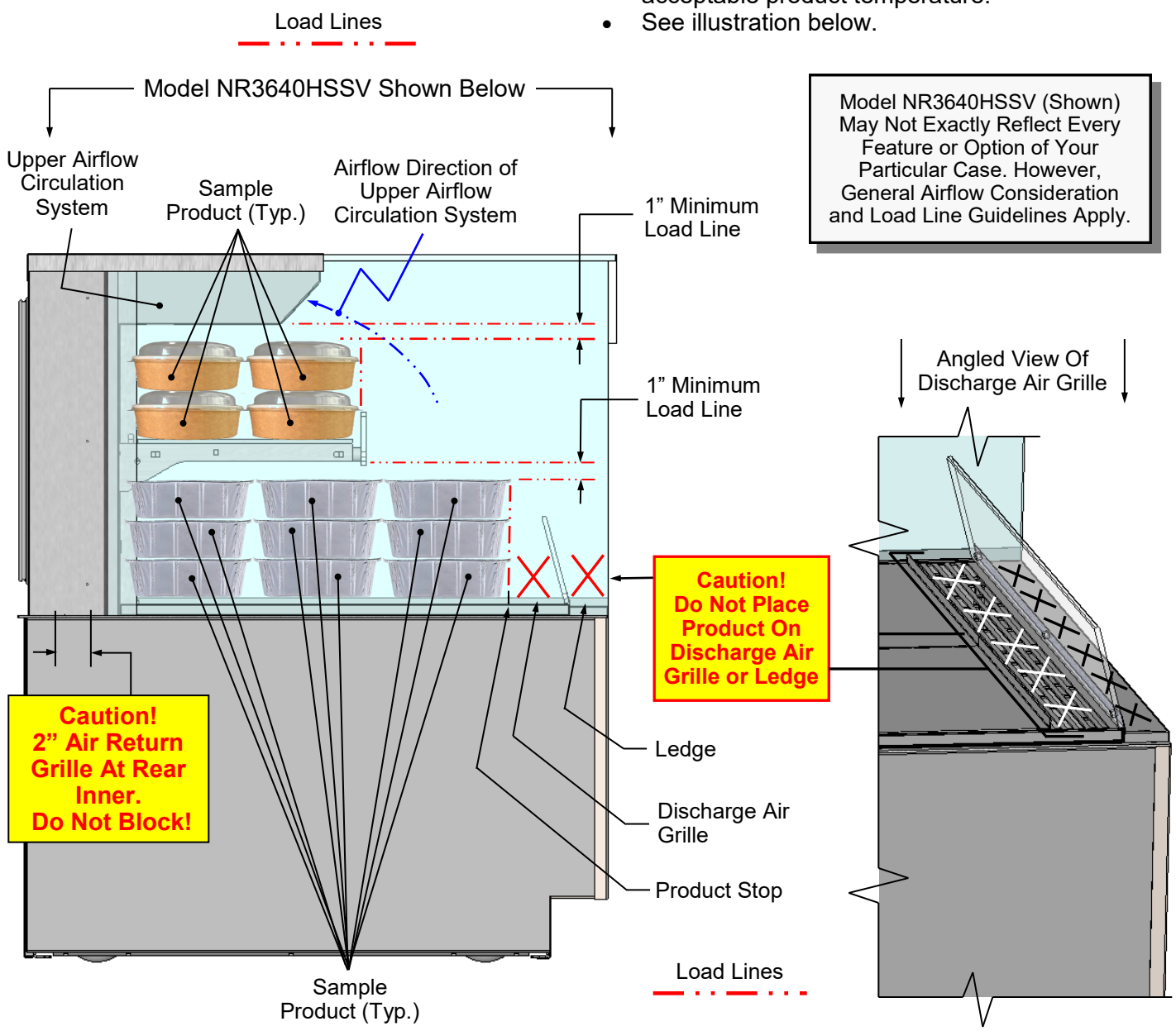

CLEANING SCHEDULE (TO BE PERFORMED BY STORE PERSONNEL)

FREQ.	INSTRUCTIONS
Daily	**Glass Surfaces (Including Shelves):** Clean glass surfaces and shelves with household or commercial glass cleaner.
Daily	**Rear Sliding Door Exterior Glass:** Clean with household or commercial glass cleaner. Clean out rear door track with moist cloth.
Daily	**End Panels, Front Panel, Toe-Kick, etc.:** Wipe off all surfaces with warm water and mild soap solution and non-abrasive cloth.
Daily	**Decks:** Wipe off decks with moist cloth dipped in mild soap and water solution.
Daily	**Stainless Steel Surfaces:** • Wash with a solution of hand dishwashing liquid detergent and water or a solution of baking soda and water. Rinse and polish dry with paper towel or soft cloth. • Never use scouring powders or steel wool as they will scratch stainless steel. • Brighten by polishing with a cloth dipped in vinegar or in ammonia; sprinkle baking soda on sponge and rub gently; rinse. Polish dry with paper towel. • Remove streaks or heat stains from stainless steel by rubbing with club soda.
Quarterly	**Under Case Cleaning:** • Remove front and/or lower rear panel. • Use broom or vacuum to remove all dust, dirt, food particles or residue from underside of case. • For units with optional humidification system, check overflow; if it needs to be emptied or cleaned, do so. • Replace front and/or lower rear panel after cleaning.

PREVENTIVE MAINTENANCE (TO BE PERFORMED BY TRAINED SERVICE PROVIDER)

WARNING! TURN OFF CASE BEFORE PERFORMING PREVENTIVE MAINTENANCE!

FREQ.	INSTRUCTIONS
Quarterly	**Tub Area:** • ***Caution! Turn off power to case. Allow case to cool for 45 minutes before proceeding.*** • Remove sub-deck and deck pans. • Wipe down tub area. • Return subdeck and deck pans to case. • Restore power to case.

CONDITION	TROUBLESHOOTING
Fan Noise Is Excessive	Call service provider.
Case is Not Holding Proper Temperature	If a large amount of cool (or ambient) product was added to the case, it will take time for the temperature to adjust. Product must be pre-heated before placing in case.
	• Check air return grilles (area at front of decking) for obstructions. • DO NOT set product on air grilles as this will prevent proper airflow! • See ***PRODUCT PLACEMENT / AIRFLOW CONSIDERATION / LOAD LINES*** section in manual for product placement guidelines.
	Check that the case is not in the sun or directly under HVAC/air conditioner ducts. See ***OVERVIEW / DISPLAY TYPE I vs. II / COMPLIANCE / WARNINGS / PRECAUTIONS*** section in this manual for specifics.
	If case still is not holding proper temperature, call service provider.
	Check all fans to confirm that all are operating.

CONDITION	TROUBLESHOOTING
Case Lights Not Working	Check that light switch is in the *ON* position. • See ***INSTALLATION, CONT'D: PLUG IN UNIT / TURN ON MAIN POWER SWITCH AND LED LIGHT SWITCH*** section in manual for switch location (regardless of case design).
	If case is not hard-wired, check that power cord is properly connected to wall outlet.
	Check that ALL of the light plugs are properly connected to the LED light. • Plug must be inserted ALL THE WAY into the LED light orifice (with no gap). • See illustrations below-left.
	Power may not be reaching the case. • Contact store management to have trained service provider perform troubleshooting. • Troubleshooting to be performed by trained service providers only is on next page.
	If case light still do not come on, it may need to be replaced. • Contact Structural Concepts' Technical Service Department for replacement light (see ***TECHNICAL SERVICE*** section of this manual for contact information). • To replace, disconnect plug from existing LED light. Disconnect LED light from its brackets. Replace with new LED light. Insert plug ALL THE WAY into LED light orifice.

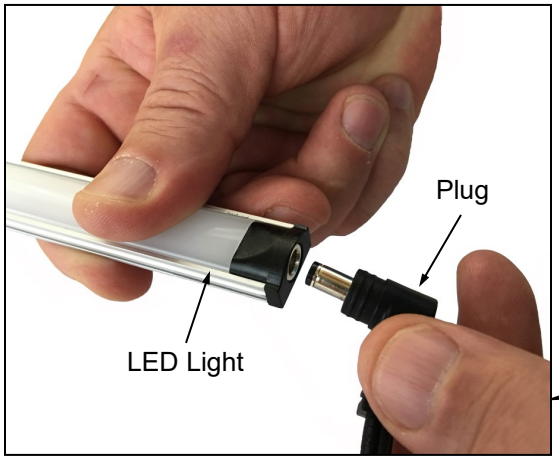

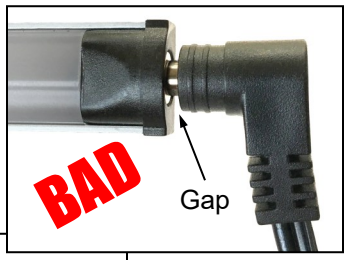

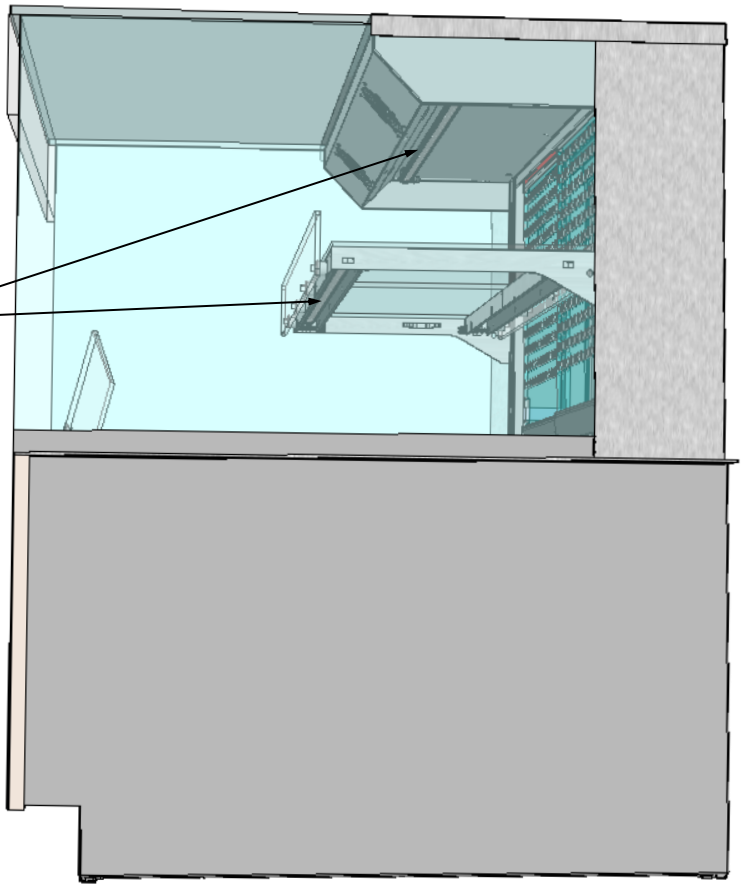

CONDITION	TROUBLESHOOTING
Fans Emit Excessive Noise	Check that the case is aligned, level and plumb.
	Check axial fans for cleanliness.
	Check that fan motors are securely mounted in brackets.
	Check that nothing is preventing blade rotation.
	Check that the fan shroud is properly secured.
Fans Are Not Working	Check that the MAIN power switch is on.
	Check that fans are plugged.
	Check for foreign material obstructing fan performance.
	Check that fan blades freely rotate within fan shrouds
	Check that power is going to fans
	Check that fan wiring is connected on terminal blocks.
System Not Operating	Check that the utility power is on.
	Check that the MAIN power switch is on.
	Check the circuit breaker box for tripped circuits.

CONDITION	TROUBLESHOOTING
Case Lights Are Not Working	See ***TROUBLESHOOTING (TO BE PERFORMED BY STORE PERSONNEL)*** section in manual for most common troubleshooting solutions.
	Check power. • If power is not supplied to the case, facility may have faulty power distribution. • If power is supplied to the case but lights are not energized, case's power supply may be faulty.
Case Is Not Holding Temperature	If a large amount of product was added to the case, it will take time for the temperature to adjust.
	Check that case is not in sun or near a heat or air-conditioning vent.
Digital Control Display Is Blank	Check that the MAIN power switch is on.
	Check the circuit breaker box for tripped circuits.
System Is Not Operating	Check that the utility power is on.
	Check that the MAIN power switch is on.
	Check the circuit breaker box for tripped circuits.

Serial Label Location & Information Listed / Technical Information & Service

- Serial labels are affixed at a wide range of places (on the header, at case rear, behind panels or toe-kicks, on electrical boxes, etc.).
- Serial labels contain electrical information as well as regulatory standards to which the case conforms.
- Sample serial label shown below.
- For additional technical information and service, see the *TECHNICAL SERVICE* page in this manual for instructions on contacting Structural Concepts' Technical Service Department.

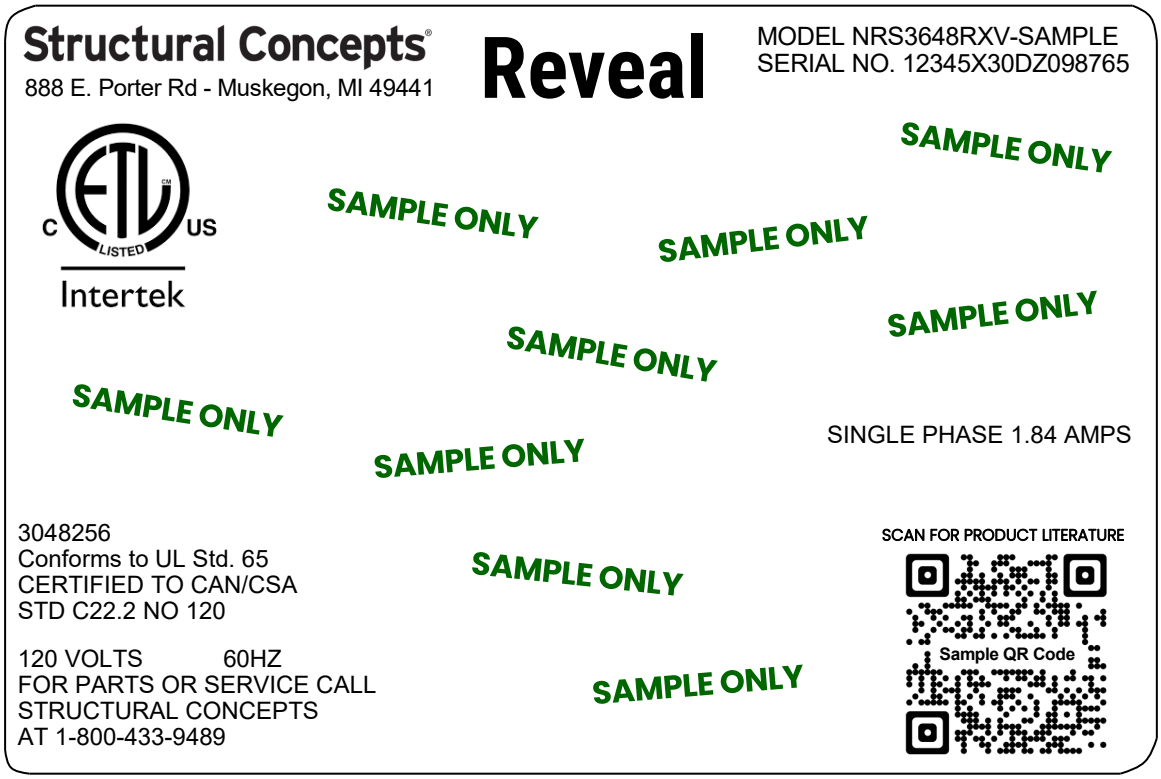

--- Sample Serial Label For Ambient/Heated Cases ---

PROGRAMMABLE CONTROLLER (SELECT, CLICK ON OR SCAN QR CODE FOR INFORMATION)

Determine Which Programmable Controller Is On Your Case (Controllers That Are Commonly Used By Structural Concepts Are Shown Below). Your Particular Programmable Controller May Differ.

Carel® PJEZ Platform

Carel® ir33 Platform

Carel® iJF Platform

Dixell® XM670K-XM679K Platform

To Access Information About The Programmable Controller That Is Used On Your Case, Follow These Instructions:

> If Viewing This Document on Smart Phone, Tablet or Computer, Select/Click On The QR Code at Right.

> If Viewing This Document In Print (Hard Copy), Scan The QR Code at Right With Your Smart Phone or Tablet.

Structural Concepts

TECH SERVICE/WARRANTY CONTACT INFO:
1 (800) 433-9490 / EXTENSION 1

DAYS/HOURS AVAILABLE:
MONDAY - FRIDAY (CLOSED HOLIDAYS)
8:00 a.m. TO 5:00 p.m. EST

YOU MUST HAVE THE FOLLOWING INFO AVAILABLE BEFORE CONTACTING STRUCTURAL CONCEPTS:

SERIAL NO. / MODEL NO. / STORE NO. / STORE ADDRESS / DETAILS (PHOTOS, LEAK LOCATIONS, DAMAGE, STORE'S AMBIENT CONDITIONS, ETC.)

To Access The Limited Warranty To Your Case, Follow These Instructions:

> If Viewing This Document on Smart Phone, Tablet or Computer, Select/Click On The QR Code at Right.

> If Viewing This Document In Print (Hard Copy), Scan The QR Code at Right With Your Smart Phone or Tablet.

Structural Concepts®