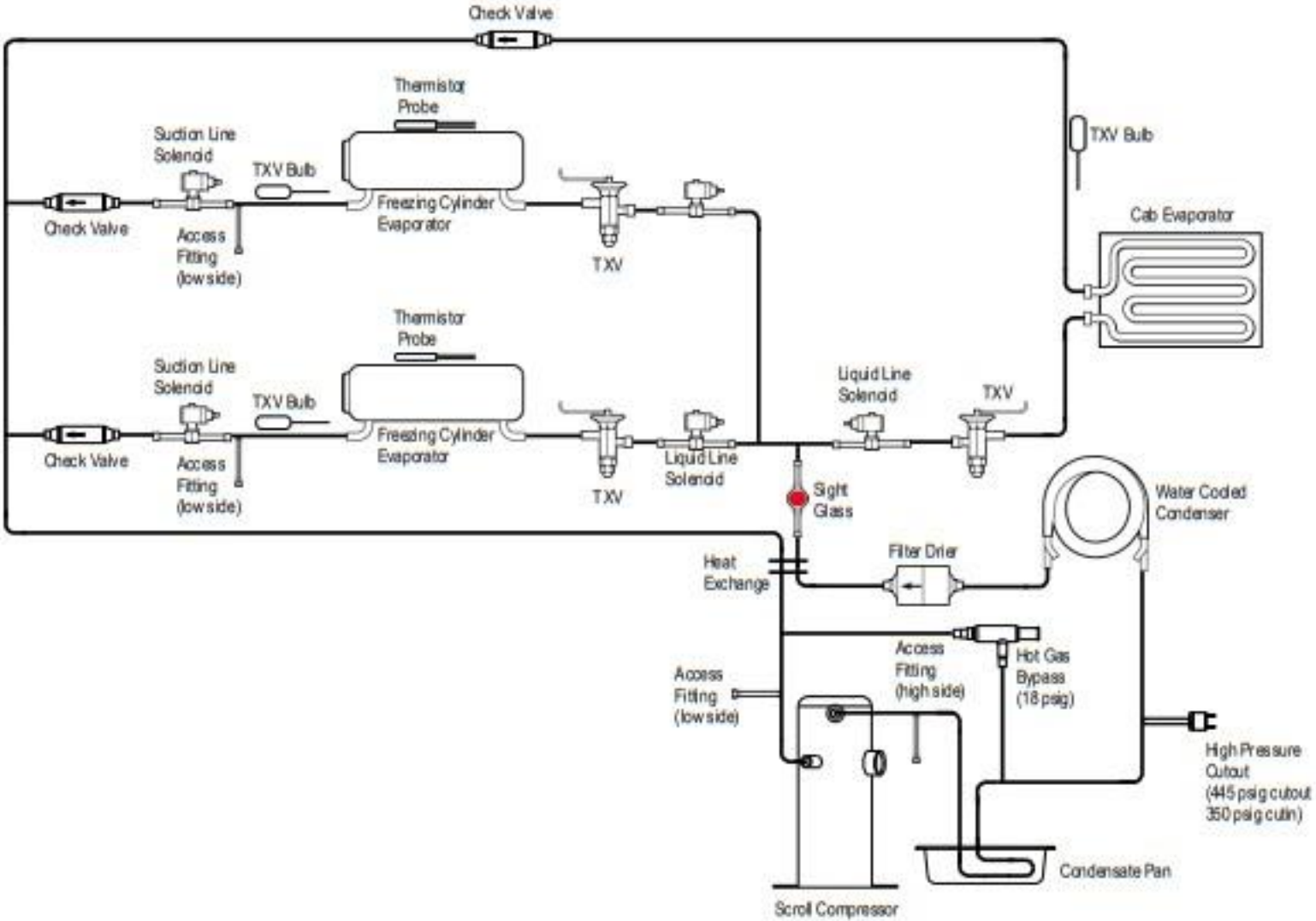
Check Valve
Thermistor Probe
Suction Line Solenoid
TXV Bulb
Check Valve
Access Fitting (low side)
Freezing Cylinder Evaporator
TXV
TXV Bulb
Cab Evaporator
Thermistor Probe
Suction Line Solenoid
TXV Bulb
Check Valve
Access Fitting (low side)
Freezing Cylinder Evaporator
TXV
Liquid Line Solenoid
Liquid Line Solenoid
TXV
Sight Glass
Water Cooled Condenser
Heat Exchange
Filter Drier
Access Fitting (high side)
Hot Gas Bypass (18 psig)
Access Fitting (low side)
High Pressure Cutout (445 psig cutout 350 psig cutin)
Condensate Pan
Scroll Compressor

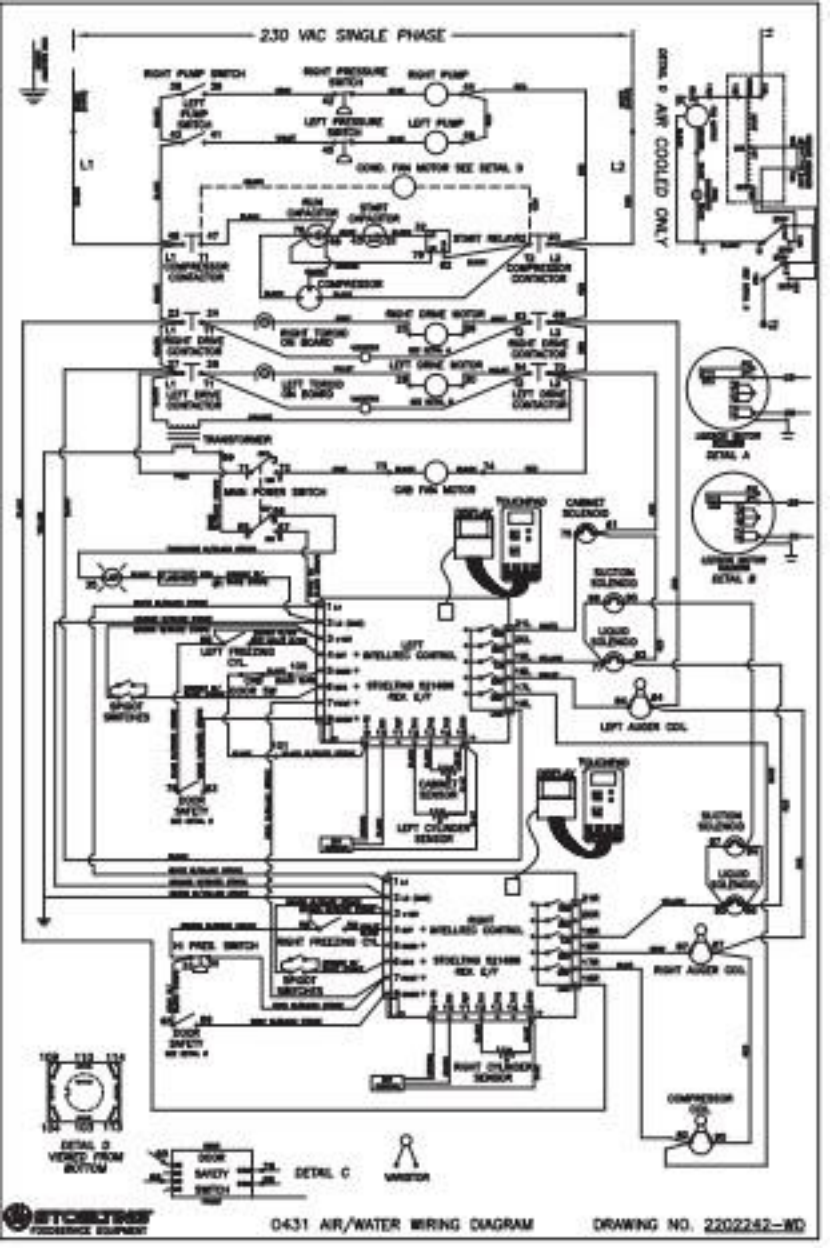
230 VAC SINGLE PHASE
RIGHT PUMP SWITCH
RIGHT PRESSURE SWITCH
RIGHT PUMP
LEFT PUMP SWITCH
LEFT PRESSURE SWITCH
LEFT PUMP
COND. FAN MOTOR SEE DETAIL D
RUN CAPACITOR
START CAPACITOR
START RELAYS
COMPRESSOR CONTACTOR
COMPRESSOR
RIGHT DRIVE MOTOR
RIGHT TORQUE ON BOARD
RIGHT DRIVE CONTACTOR
LEFT DRIVE MOTOR
LEFT TORQUE ON BOARD
LEFT DRIVE CONTACTOR
TRANSFORMER
MAIN POWER SWITCH
CAB FAN MOTOR
TOUCHPAD
CABINET SOLENOID
SUCTION SOLENOID
LIQUID SOLENOID
LEFT FREEZING COIL
LEFT
SPIGOT SWITCHES
DOOR SAFETY
LEFT AUGER COIL
CABINET SENSOR
LEFT CYLINDER SENSOR
RIGHT
RIGHT FREEZING COIL
HI PRES. SWITCH
RIGHT AUGER COIL
RIGHT CYLINDER SENSOR
COMPRESSOR COIL
DETAIL A
DETAIL B
DETAIL D AIR COOLED ONLY
DETAIL D VIEWED FROM BOTTOM
DOOR SAFETY SWITCH
DETAIL C
VARISTOR
L1
L2
STOKES FOODSERVICE EQUIPMENT
0431 AIR/WATER WIRING DIAGRAM
DRAWING NO. 2202242-WD