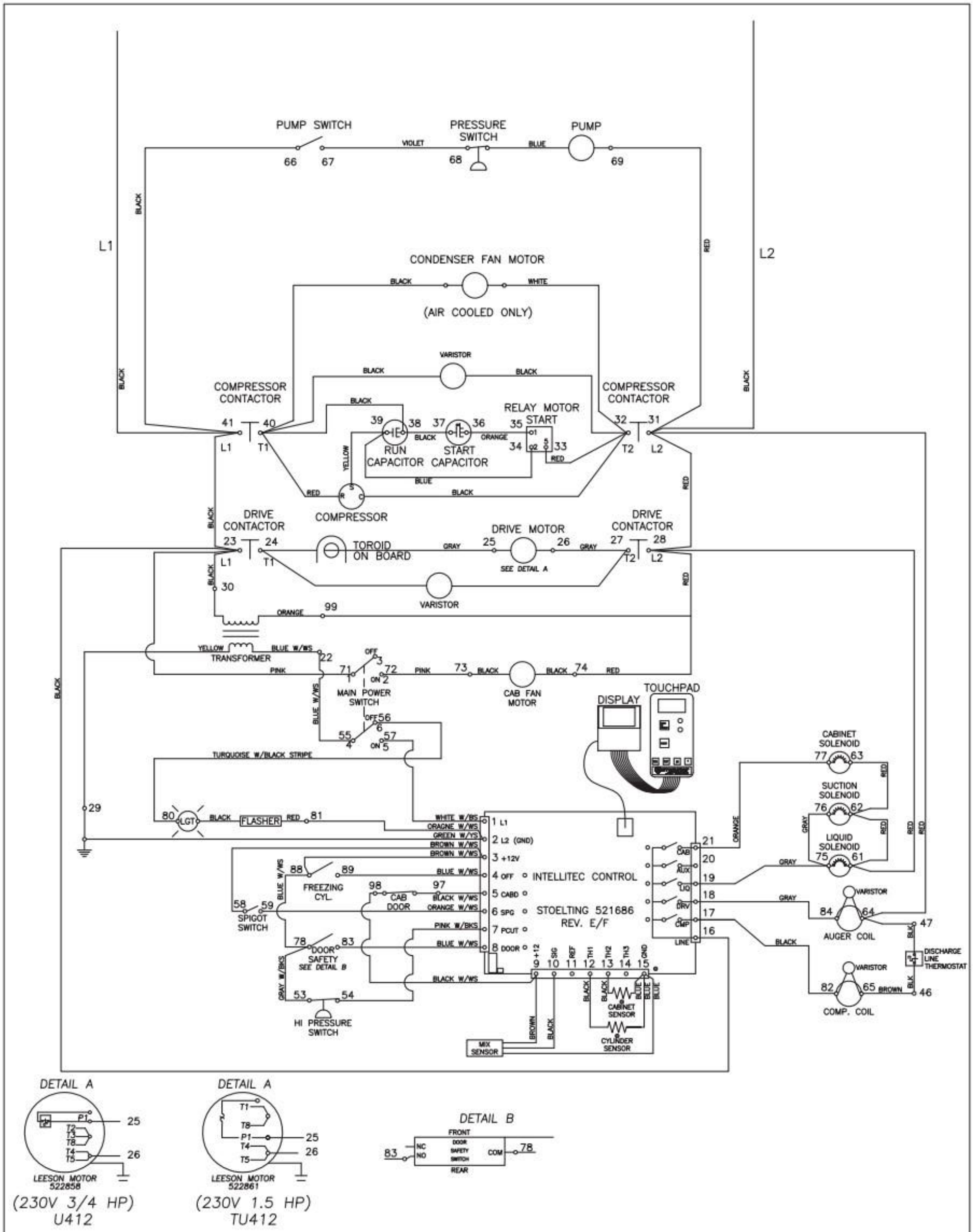

STOELTING
A Polar Ware Company

U412/TU412 INTELLITEC WIRING DIAGRAM

DRAWING NO. 2187936-WD

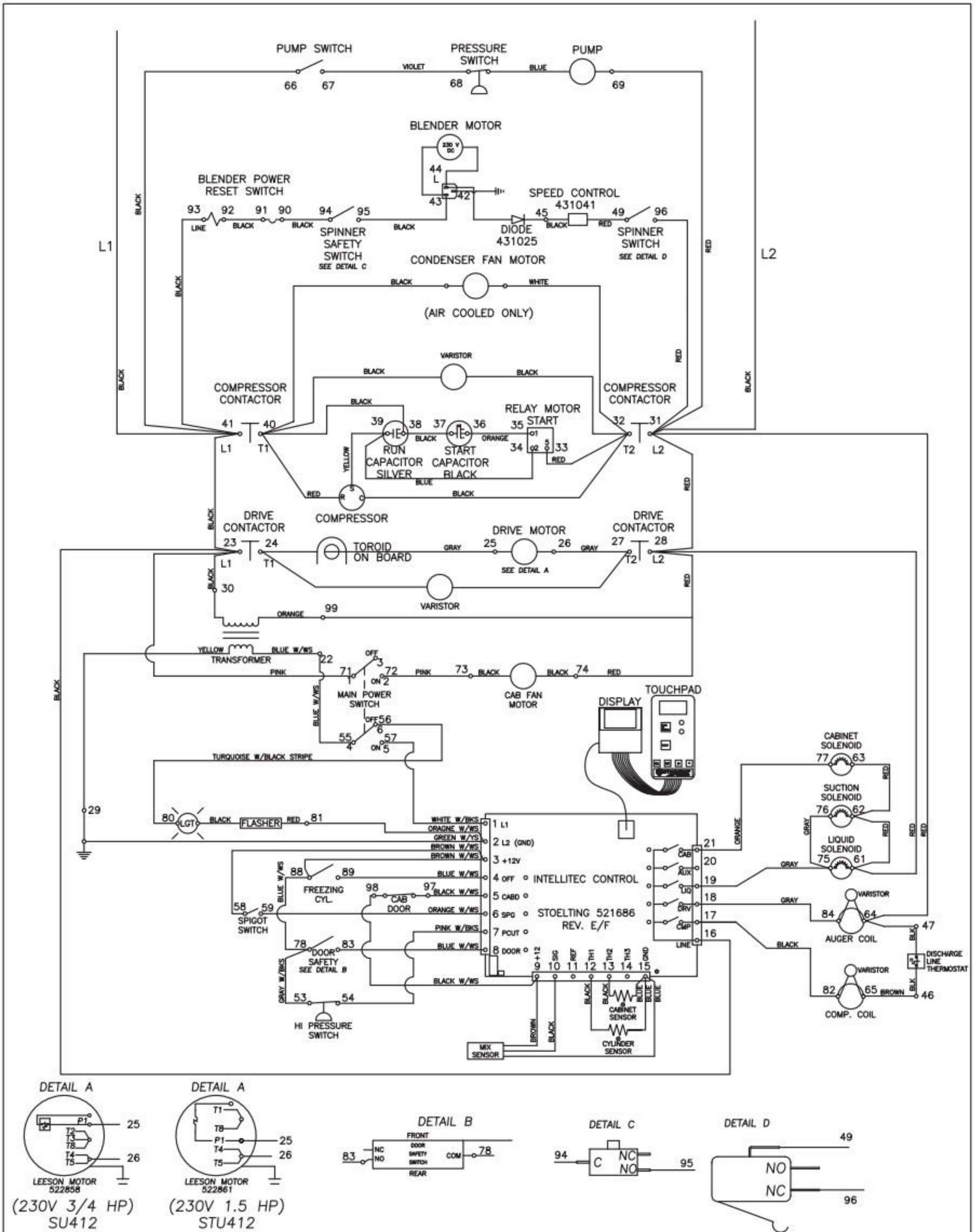

STOELTING
A Polar Ware Company

SU412/STU412 INTELLITEC WIRING DIAGRAM

DRAWING NO. 2187935-WD