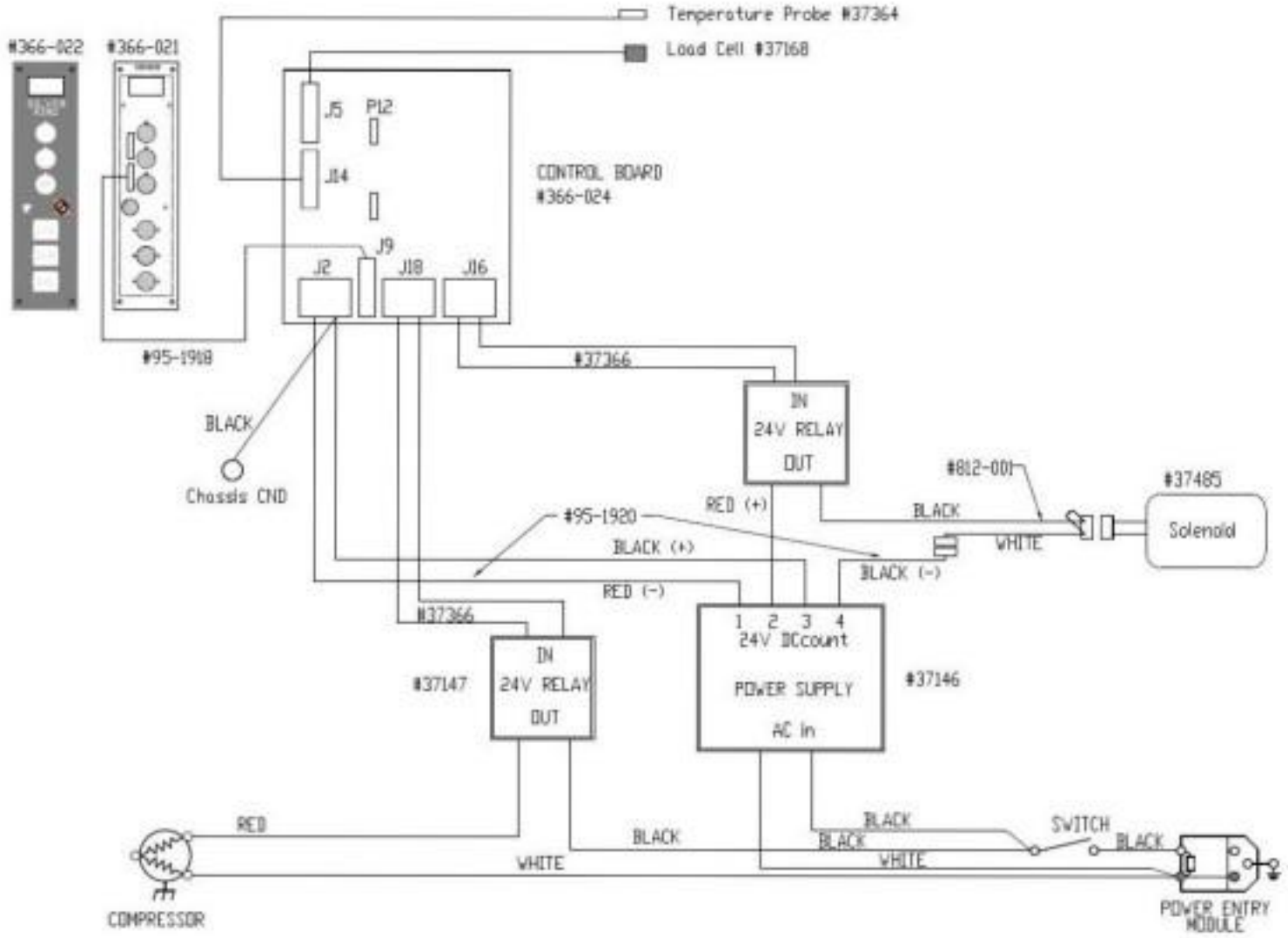

ECN	REV	DESCRIPTION	DATE	BY	CHK'D	APP'D

SILVER KING REFRIGERATION, INC.
DIAGRAM WIRING (PORTION CONTROL)
SHEET 1 OF 1 | A