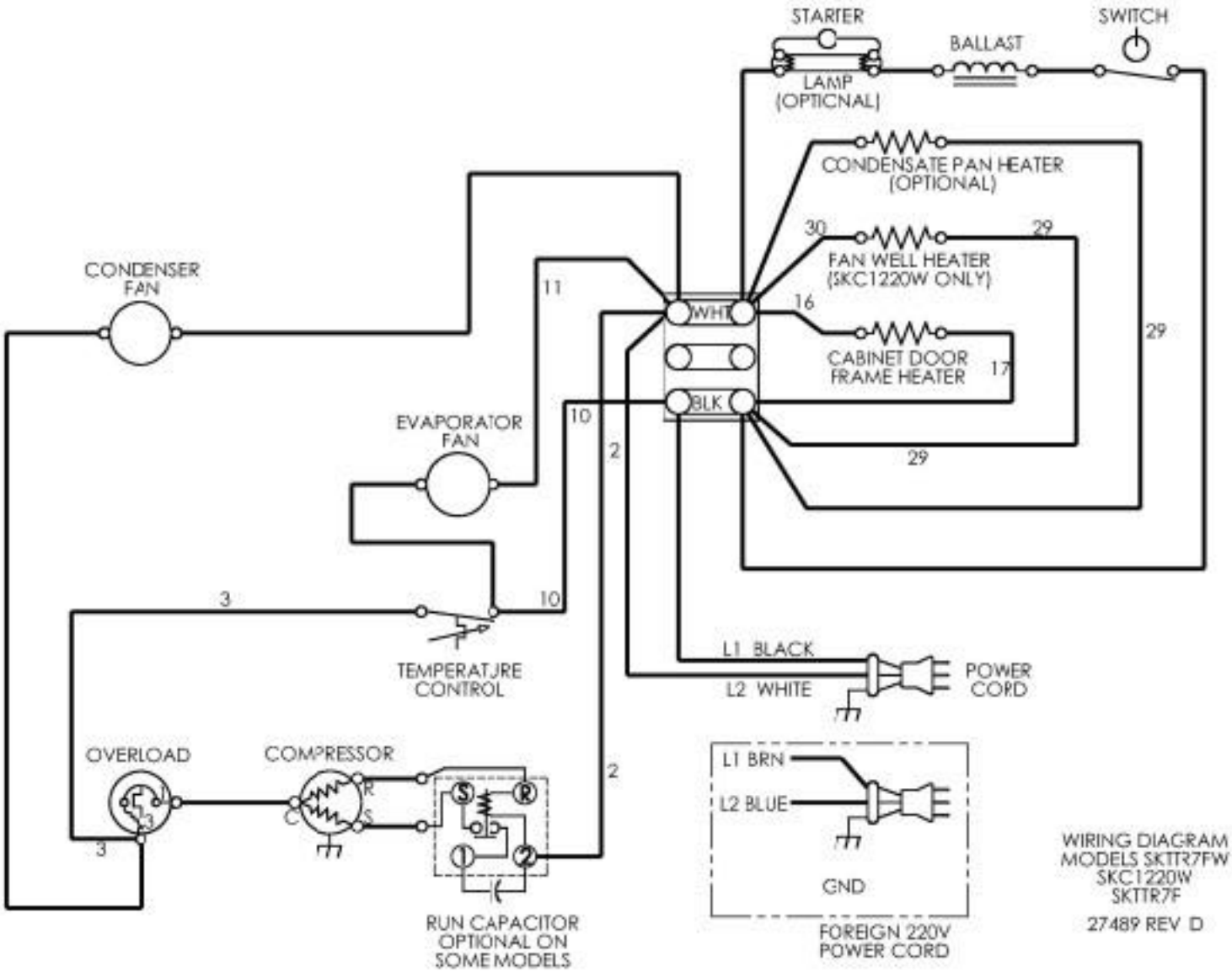
STARTER
SWITCH
BALLAST
LAMP
(OPTICNAL)
CONDENSATE PAN HEATER
(OPTIONAL)
30
29
FAN WELL HEATER
(SKC1220W ONLY)
CONDENSER
FAN
11
WHT
16
29
CABINET DOOR
FRAME HEATER
17
BLK
EVAPORATOR
FAN
10
2
29
3
10
TEMPERATJRE
CONTROL
L1 BLACK
L2 WHITE
POWER
CORD
OVERLOAD
COMPRESSOR
R
C
S
L3
3
2
L1 BRN
L2 BLUE
GND
RUN CAPACITOR
OPTIONAL ON
SOME MODELS
FOREIGN 220V
POWER CORD
WIRING DIAGRAM
MODELS SKTTR7FW
SKC1220W
SKTTR7F
27489 REV D