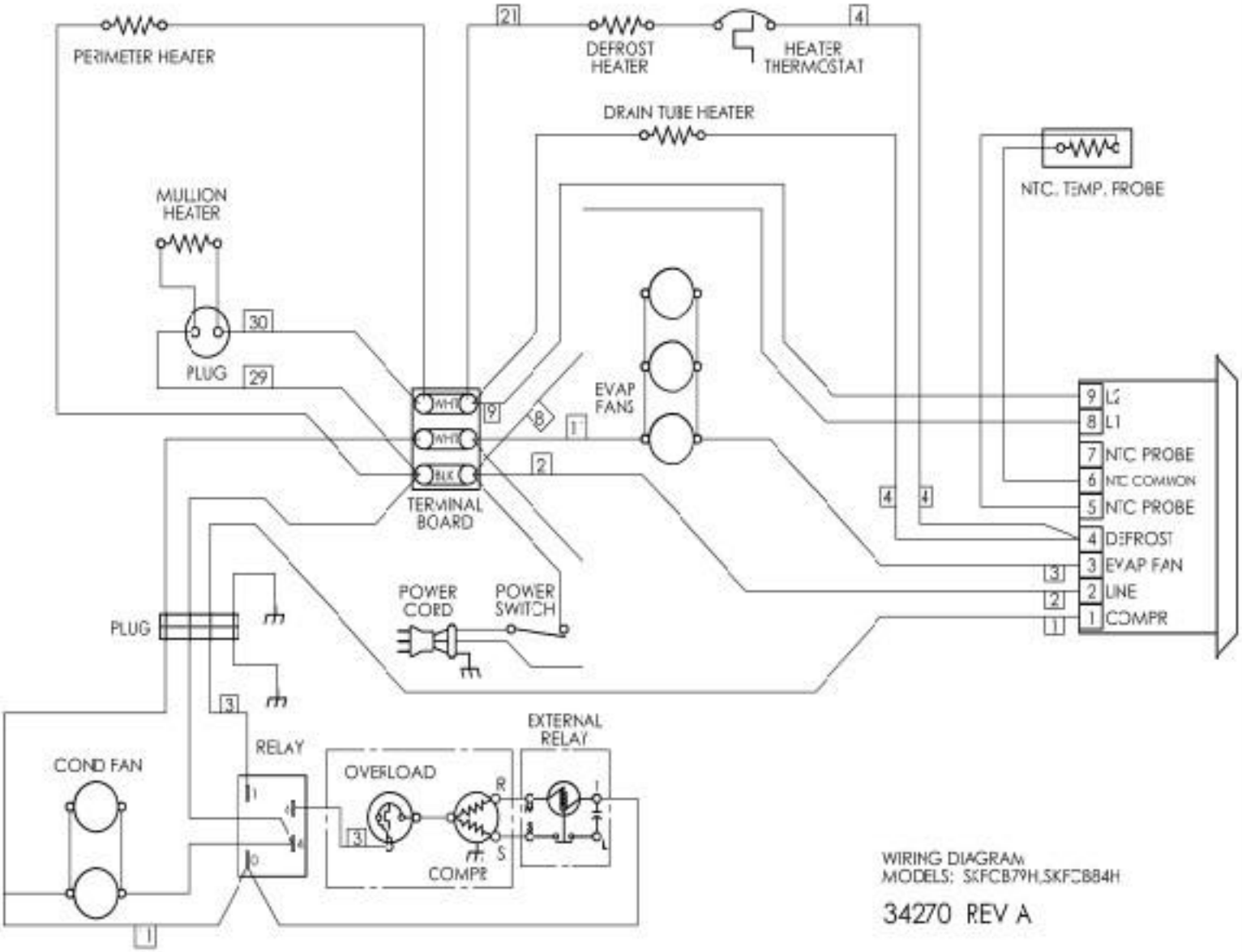
PERIMETER HEATER
DEFROST HEATER
HEATER THERMOSTAT
DRAIN TUBE HEATER
NTC. TEMP. PROBE
MULLION HEATER
PLUG
EVAP FANS
TERMINAL BOARD
WHT
WHT
BLK
9 L2
8 L1
7 NTC PROBE
6 NTC COMMON
5 NTC PROBE
4 DEFROST
3 EVAP FAN
2 LINE
1 COMPR
POWER CORD
POWER SWITCH
PLUG
COND FAN
RELAY
OVERLOAD
COMPR
EXTERNAL RELAY
R
S
WIRING DIAGRAM
MODELS: SKFCB79H,SKFCB84H
34270 REV A