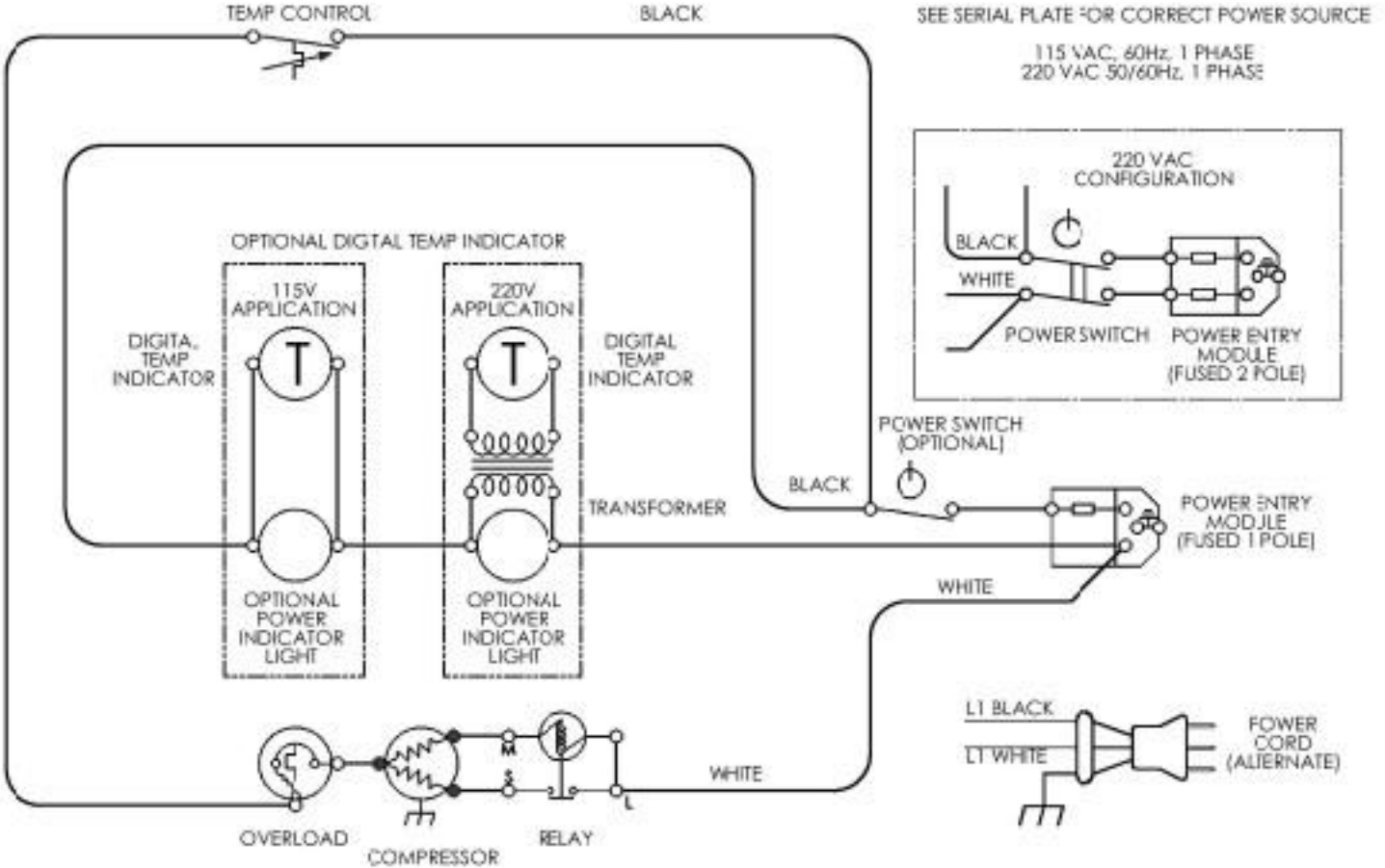

MODELS: SKSTAR21, SKSTAR22, SKBD105M, SKBD205M, SKBD210F, SKNES2A, SKNES3A

35813 REV A