SILVERKING®

SKF27A-ED Front-Breathing Freezer - Undercounter

Technical Manual and Replacement Parts List



Release Date: 9/1/23
Publication Number: 45071-SK
Revision Date: 9/1/23
Revision: F

Marmon Foodservice Technologies

Table of Contents

Warranty 3
Safety Information 6
Setup and Installation 10
R290 Safety Information 11
Additional Operating Safety Information 16
Air Curtain Installation 17
Startup and Operation 18
Maintenance 19
Parts List and Exploded View 20
Electrical Schematic 22
Thermistor Field Testing 23

© 2023 Marmon Foodservice Technologies, Inc 230410
All sales subject to terms and conditions applicable at time of sale. marmonfoodservice.com/tandcsale

Warranty Statement

Silver King warrants to the original purchaser of every new Silver King Legacy refrigerated self -contained unit (as defined below), that the Equipment shall be free from defects in material and workmanship under normal use and service as outlined in the Technical Manual for a period of one (1) year from the later of either (a) the date of shipment from the manufacturer or (b) the date of installation (the “Warranty Period”), but in no event shall the Warranty Period commence later than six (6) months from the date of shipment from the manufacturer unless otherwise agreed upon by the parties in writing. Equipment includes General Market Refrigeration units and excludes all Dispensing and Custom Holding Refrigeration or extended agreements whose written terms are conditional at time of sale or contract. All warranties are subject to specific limitations outlined below.

This Equipment warranty does not apply to: Repair or replacement required as a result of carelessness or neglect. Improper installation, incorrect voltage supply, modifying, tampering with or altering components and/or Equipment. Failure to perform proper maintenance. This warranty does not apply to damage resulting from fire, water, burglary, accident, abuse, misuse, transit, acts of God, terrorism, attempted repairs, improper installation, or maintenance by unauthorized persons, and does not apply to food loss. Unit is compromised by adding excess weight or adhering non-approved components to the frame. Combining the equipment with hardware, fixtures, accessories, or other equipment not provided by Silver King. Misuse of the Equipment or use of the Equipment not in accordance with the Technical Manual. Warranty excludes consumables or replacement components such as shelving, trays, gaskets, etc. Warranty excludes interior liner or exterior shell. Condensing coils must be cleaned at regular intervals. Failure to do so can cause compressor malfunction and will void warranty. Although cleaning requirements vary in accordance with operation of various products, Silver King advocates a minimum monthly cleaning.

The Equipment warranty does not include freight, handling, installation, labor (following the (1) year labor warranty period), or other incidental or consequential costs including product and/or economic loss. This Equipment warranty is in lieu of all other warranties, express or implied, are hereby disclaimed and excluded including those of merchantability, and fitness for a particular purpose. This Equipment warranty is non -transferable. Specific provisions of this Equipment warranty are as follows:

90 DAY REPLACEMENT PARTS WARRANTY

Silver King warrants to the original Equipment purchaser that a replacement OEM part thereof will be free of defects in material and workmanship, under normal use and service, for a period of 90 days from the date of original purchase of such replacement OEM part subject to all terms and conditions herein.

LIFETIME HINGE AND HANDLE WARRANTY

Silver King provides a lifetime warranty on hinges and primary (door or drawer) handl es for equipment manufactured on or after December 15, 2019. In the event of a non-conforming hinge or primary handle, Silver King shall provide a replacement part; however, Purchaser shall be responsible for any other replacement costs, including but not limited to shipping, installation and labor.

Three (3) Year Drawer Slide Warranty Silver King warrants to the original Equipment purchaser for a period of time not to exceed the earlier of the following: three (3) years from the date of original purchase o f the Equipment or three (3) years and six (6) months from the date of shipment from the factory of the equipment, that it will replace the drawer slides with one of similar design and capacity, exclusive of delivery and installation charges, if it is found in Silver King’s review to be inefficient or inoperative due to defects in material or factory workmanship.

© 2023 Marmon Foodservice Technologies, Inc 230410
All sales subject to terms and conditions applicable at time of sale. marmonfoodservice.com/tandcsale

Warranty Statement

FIVE (5) YEAR COMPRESSOR WARRANTY

Silver King warrants to the original Equipment purchaser for a period of time not to exceed the following: five (5) years from the date of original purchase of the Equipment or five (5) years and six (6) months from the date of shipment from the factory of the Equipment, that it will replace the compressor with one of similar design and capacity, exclusive of delivery and installation charges, if it is found subject to Silver King's review to be inefficient or inoperative due to defects in material or factory workmanship. It is the original purchaser's responsibility to return the serial plate of the defective compressor, or at Silver King's option the complete compressor, to the factory. Failure to do so will void this limited compressor warranty. This limited compressor warranty shall be limited to parts only after the WARRANTY period applicable to the Equipment has expired.

This Equipment warranty is limited to repairing or replacing any parts that, at Silver King's discretion, are deemed to be defective within the time period covered by this warranty. The three (3) year parts warranty covers standard freight and handling charges. Special handling charges or expedited means for transport are excluded from reimbursement. Use of non-OEM parts may, at Silver King's discretion, void this warranty. If approved, warranty credit for non-OEM parts will be issued at the OEM cost. Replacement parts sold separately are warranted for 90-days from date of purchase. Special installation / applications, including remote locations, are limited in coverage by this warranty. Any installation that requires extra work, and or travel, is the sole responsibility of the equipment purchaser.

ADDITIONAL WARRANTY GUIDELINES

A factory issued Service Authorization Number must be obtained prior to work being performed under the (1) one-year labor warranty. Contact your supplier or Silver King. Claims submitted without a Service Authorization Number will be paid at Silver King's discretion. The labor warranty includes standard straight time labor charges in accordance with Silver King's Labor Warranty Guidelines and reasonable travel time, as determined as determined in the Silver King time – rate guide.

Silver King, at its discretion, may request photos during or prior to service being dispatched to validate a technical issue. Failure to comply with the request may result in the cost of service being the responsibility of the service requester or site.

The labor warranty does not cover original installation, startup, normal adjustments, or maintenance. Normal adjustments and maintenance include, but are not limited to: temperature control adjust ments, temperature indicator calibrations, coil and filter cleaning, or condensate drain cleaning.

A second service call for a related failure is not covered.

Use of refrigerants other than specified on the Equipment serial plate voids the warranty. All claims must include: model and serial number of equipment, date of purchase, date of failure, and a copy of the service invoice detailing the defect and service performed. No claim will be processed without this information. All claims must be filed within 30 days from date of service.

PRODUCT ORDERING INFORMATION

Call us toll-free at 1-800-328-3329 or 1-763-923-2441. Fax us at 1-763-553-1209. Visit www.silverking.com for stocking distributor, equipment specs, and current price list for your area.

SERVICE / PARTS ORDERING INFORMATION

Call us toll free at 1-800-328-3329. Select prompt 1 for Equipment Service and Tech Support or prompt 2 for Parts.

© 2023 Marmon Foodservice Technologies, Inc 230410
All sales subject to terms and conditions applicable at time of sale. marmonfoodservice.com/tandcsale

Warranty Statement

TERMS AND CONDITIONS

WARRANTY period may vary from customer to customer and is contract specific. All prices reflect payment in U.S. Dollars. Prices do not include any freight, duty, or taxes. Pricing subject to change without notice. No returns are accepted without prior written approval from the factory. An RMA (Returned Merchandise Authorization) form must be completed and then approved by Silver King. Please contact Silver King for details. Restocking fee will apply. All electrical equipment is single phase. Prices, designs, and specifications are subject to change without notice. Payments via credit card are subject to a 3.5% surcharge.

Any and all environmental attributes, including environmental offset credit rights, with respect to Silver King refrigeration units manufactured after September 1, 2015, shall remain the property of Silver King and are not transferred.

IN NO EVENT SHALL SILVER KING BE LIABLE FOR CONSEQUENTIAL, SPECIAL OR PUNITIVE DAMAGES. THE REMEDIES OF PURCHASER SET FORTH HEREIN ARE EXCLUSIVE AND THE TOTAL LIABILITY OF SILVER KING, WHETHER BASED ON CONTRACT, WARRANTY, NEGLIGENCE, INDEMNIFICATION, STRICT LIABILITY, TORT, OR OTHERWISE, SHALL NOT EXCEED THE PURCHASE PRICE OF THE COMPONENT UPON WHICH LIABILITY IS BASED. SILVER KING SHALL HAVE NO OBLIGATION OR LIABILITY FOR CONSEQUENTIAL OR SPECIAL DAMAGES, INCLUDING BUT NOT LIMITED TO INDIRECT, PUNITIVE DAMAGES, LOSS OF USE, LOSS OF PRODUCT, DOWNTIME OR LOST PROFITS ARISING OUT OR RELATED TO OR CONNECTED IN ANY WAY WITH THE PRODUCT OR ITS USE.

© Silver King prices subject to change without notice

Note: Additional Terms and Conditions of sale may apply. Notice: Specifications subject to change without notice. Contact factory for specific model agency approval.

Marmon Foodservice Technologies
355 Kehoe Blvd, Carol Stream, IL 60188
1-800-328-3329, marmonfoodservice.com

© 2023 Marmon Foodservice Technologies, Inc 230410
All sales subject to terms and conditions applicable at time of sale. marmonfoodservice.com/tandcsale

Safety Information

Thank you for purchasing Silver King food service equipment. Our goal is to provide our customers with the most reliable equipment in the industry today. Please read this manual and the accompanying warranty information before operating your new Silver King unit.

INSPECT FOR DAMAGE AND UNCRATE

Upon delivery of your new Silver King unit, uncrate at once to inspect for possible freight damage by following the instructions printed on the exterior of the container. Report any damages to the carrier responsible for transportation and promptly present a claim for any evidence of mishandling. Save all packaging materials if a claim is filed.

PRECAUTIONS BEFORE USING THIS PRODUCT

- If the unit has recently been transported on its side (or placed horizontally), then please let unit stand with the casters (or feet) on the ground for a minimum of 24 hours before plugging it in.
- This appliance is not intended for use by persons (including children) with reduced physical, sensory or mental capabilities, or lack of experience and knowledge, unless they have been given supervision or instruction concerning use of the appliance by a person responsible for their safety.
- Use caution when cleaning the condenser, the fins are very sharp.
- For units with a dual hertz rating, no adjustments are required for normal operation.
- If the supply cord is damaged, it must be replaced by the manufacturer, a service agent or similarly qualified persons in order to avoid a hazard.
- This refrigeration unit is not intended to be used at altitudes above 2000 meters.
- Do not store explosive substances, such as aerosol cans containing a flammable propellant, in this appliance.
- Do not exceed the maximum load capacity of 75 pounds per drawer.
- Use caution when moving, installing, maintaining and using this refrigeration device to avoid damaging the refrigerant tubing or increasing the risk of a leak.
- All component parts must be replaced with like components. All servicing must be performed by factory-authorized service personnel: to minimize the risk of possible ignition due to incorrect parts usage or improper servicing.

READ AND FOLLOW ALL SAFETY INSTRUCTIONS:

Safety Overview

- Read and follow ALL SAFETY INSTRUCTIONS in this manual and any warning/caution labels on the unit (decals, labels or laminated cards).
- Read and understand ALL applicable OSHA (Occupational Safety and Health Administration) safety regulations before Operating this unit.

© 2023 Marmon Foodservice Technologies, Inc 230410
All sales subject to terms and conditions applicable at time of sale. marmonfoodservice.com/tandcsale

Safety Information

Recognize Safety Alerts

This is the safety alert symbol. When you see it in this manual or on the unit, be alert to the potential of personal injury or damage to the unit.

Different Types of Alerts

 **DANGER:**

Indicates an immediate hazardous situation which if not avoided WILL result in serious injury, death or equipment damage.

 **WARNING:**

Indicates a potentially hazardous situation which, if not avoided, COULD result in serious injury, death, or equipment damage.

 **CAUTION:**

Indicates a potentially hazardous situation which, if not avoided, MAY result in minor or moderate injury or equipment damage.

Safety Precautions

 **WARNING!**

R290 Refrigerant used in this dispenser is flammable. Follow the Warnings listed below to avoid hazards.

 **DANGER**

Risk of fire or explosion. **Flammable refrigerant** used. To be repaired only by trained service personnel. Do not puncture refrigeration tubing.

 **DANGER**

Risk of fire or explosion. Flammable refrigerant used. Do not use mechanical devices to defrost refrigerator/freezer. Do not puncture refrigeration tubing.

© 2023 Marmon Foodservice Technologies, Inc 230410
All sales subject to terms and conditions applicable at time of sale. marmonfoodservice.com/tandcsale

Safety Information



CAUTION
Risk of fire or explosion. Flammable refrigerant used. Consult repair manual/owner's guide before attempting to service this product. All safety precautions must be followed.



CAUTION
Risk of fire or explosion. To be repaired only by trained service personnel. Use only Silver King approved replacement parts. Flammable refrigerant used.



CAUTION
Risk of fire or explosion. Dispose of properly in accordance with federal or local regulations. Flammable refrigerant used.



WARNING
This product can expose you to chemicals including lead, which are known to the State of California to cause cancer, birth defects, or other reproductive harm.



CAUTION
Risk of fire or explosion. Flammable refrigerant used. Dispose of properly In accordance with federal or local regulations. Flammable refrigerant used.



CAUTION
Risk Of Fire Or Explosion Due To Puncture Of Refrigerant Tubing; Follow Handling Instructions Carefully. Flammable Refrigerant used.



WARNING
Do not use electrical appliances inside the food/ice storage compartments unless they are of the type recommended by the manufacturer.



WARNING
Appliances and their surroundings shall not attain excessive temperatures in normal use.

© 2023 Marmon Foodservice Technologies, Inc 230410
All sales subject to terms and conditions applicable at time of sale. marmonfoodservice.com/tandcsale

Safety Information

WARNING

Do not use means to accelerate the defrosting process or to clean, other than those recommended by the manufacturer.

The appliance shall be stored in a room without continuously operating ignition sources (for example: open flames, an operating gas appliance or an operating electric heater).

Do not pierce or burn.

Be aware that refrigerants may not contain an odor.

WARNING

Keep any required ventilation openings clear of obstruction.

Notice that servicing shall be performed only as recommended by manufacturer.

CAUTION

Always be sure to keep area around the unit clean and free of clutter. Failure to keep this area clean may result in injury or equipment damage.

DO NOT STORE EXPLOSIVE SUBSTANCES SUCH AS AEROSOL CANS WITH A FLAMMABLE PROPELLANT IN THIS APPLIANCE.

CHILDREN SHALL NOT PLAY WITH THE APPLIANCE. CLEANING AND USER MAINTENANCE SHALL NOT BE PERFORMED BY CHILDREN WITHOUT SUPERVISION.

© 2023 Marmon Foodservice Technologies, Inc 230410
All sales subject to terms and conditions applicable at time of sale. marmonfoodservice.com/tandcsale

Setup and Installation

Plastic Covering Removal

The stainless steel exterior of the cabinet has been protected by a plastic covering during shipping. This covering can be readily stripped before installation. After removing this covering, wash the interior and exterior surfaces using a warm, mild soapy water solution and a sponge or cloth, rinse with clean water and dry.

Casters

The casters have been preinstalled for your convenience. A wrench has been provided along with the unit to tighten the casters should they become loose.

Condenser Air Curtain

The air curtain is packaged inside the unit. The instructions for installing this part are included in this technical manual. Do not operate the unit without the air curtain installed!

Drawers

To remove the drawers for cleaning, open them fully, remove the pans and dividers by lifting them out. Unlock the center drawer tracks on each side of the drawer, lift up on the front of the drawer to remove the front wheels from the drawer tracks, continue to slide the drawer out until the rear wheels reach the end of the tracks and lift the drawer out of the tracks. (To reinstall them, perform the steps in reverse order.) The drawer tracks can be removed for cleaning after the drawers are removed from the cabinet. With the track halfway inside the cabinet, push the rear locking device on the center slide towards the back of the unit, then pull the slide out. To reinstall the center slide, place the slide back into the cabinet track and push it all the way back to lock it in. The drawer slide system is rated for 100 pounds. DO NOT use them as a support to stand on.

Location

When locating your new refrigerator, convenience and accessibility are important considerations, but the following installation guidelines must be followed;

- Always avoid placing the refrigerator adjacent to an oven, heating element or hot air source that would affect the operation of the unit.
- For proper ventilation, the bottom front of the unit must not be obstructed. The unit must be on legs or casters to raise it off the floor. The unit can be installed tight on the sides and back.
- The unit must be level or tilted backwards slightly.

Energy Class Ratings

The refrigerator has a class 4 energy rating. The refrigerator was tested at an ambient temperature of 40°C at 40% relative humidity.

Climate Class Rating

The climate-class rating is 4: designed for use in areas not exceeding 30°C.

Electrical Connections

Be sure to check the data plate, located on the liner of the cabinet, for required voltage prior to connecting the unit to power. The specifications on the data plate supersede any future discussion.

Your Silver King refrigerator is equipped with an eight (8) foot power cord. Any attempt to modify the plug will void the warranty, terminate the manufacturer's responsibility, and could result in serious injury.

If the supply cord is damaged, it must be replaced by the manufacturer, its service agent or similarly qualified persons in order to avoid a hazard." The circuit must be protected with a 15 or 20 ampere fuse or breaker. The unit must be isolated on a circuit and not plugged into an extension cord.

© 2023 Marmon Foodservice Technologies, Inc 230410
All sales subject to terms and conditions applicable at time of sale. marmonfoodservice.com/tandcsale

R290 Safety Information

Specialized Precautions and Guidelines For Servicing Units Using R290 Refrigerant

Qualification of Service Personnel/Workers:

Every working procedure that affects safety shall be carried out only by competent, qualified and authorized personnel. This includes procedures for maintenance, service and repair operations.

Specific examples of such safety-affecting procedures include:

- Breaking into the refrigerating circuit.
- Opening of sealed components.
- Opening of ventilated enclosures.

Information on Servicing:

Prior to beginning work on systems containing **FLAMMABLE REFRIGERANTS,** safety checks are necessary to ensure that the risk of ignition is minimized.

· For repair to the REFRIGERATING SYSTEM, the requirements below shall be understood and implemented prior to conducting work on the system.

Work Procedure:

Work shall be performed under a controlled procedure so as to minimize the risk of a flammable gas or vapor being present while the work is being performed.

General Work Area:

All maintenance staff and others working in the local area shall be instructed on the nature of work being carried out. Work in confined spaces shall be avoided.

Checking for Presence of Refrigerant:

The area shall be checked with an appropriate refrigerant detector prior to, and during work, to ensure the technician is aware of potentially toxic or flammable atmospheres.

Ensure that the leak detection equipment being used is suitable for use with all applicable refrigerants, i.e. non-sparking, adequately sealed or intrinsically safe.

Presence of Fire Extinguisher:

If any hot work is to be conducted on the refrigerating equipment or any associated parts, appropriate fire extinguishing equipment shall be available to hand. Have a dry chemical or CO_2 fire extinguisher adjacent to the charging area.

© 2023 Marmon Foodservice Technologies, Inc 230410
All sales subject to terms and conditions applicable at time of sale. marmonfoodservice.com/tandcsale

R290 Safety Information

No Ignition Sources:

No person carrying out work in relation to a **REFRIGERATING SYSTEM** which involves exposing any pipe work shall use any sources of ignition in such a manner that it may lead to the risk of fire or explosion.

All possible ignition sources, including cigarette smoking, should be kept sufficiently far away from the site of installation, repairing, removing and disposal, during which refrigerant can possibly be released to the surrounding space. Prior to work taking place, the area around the equipment is to be surveyed to make sure that there are no flammable hazards or ignition risks. "No Smoking" signs shall be displayed.

Ventilated Area:

Ensure that the area is in the open or that it is adequately ventilated before breaking into the refrigeration system or conducting any hot work. A degree of ventilation shall continue during the period that the work is carried out. The ventilation should safely disperse any released refrigerant and preferably expel it externally into the atmosphere.

Checks to the Refrigeration Equipment:

Where electrical components are being changed, they shall be fit for the purpose and to the correct specification. At all times the manufacturer's maintenance and service guidelines shall be followed. If in doubt, consult the manufacturer's technical department for assistance.

The following checks shall be applied to installations using **FLAMMABLE REFRIGERANTS**:

The actual **REFRIGERANT CHARGE** is in accordance with the room size within which the refrigerant containing parts are installed.

The ventilation machinery and outlets are operating adequately and are not obstructed.

If an indirect refrigerating circuit is being used, the secondary circuit shall be checked for the presence of refrigerant.

Marking to the equipment continues to be visible and legible. Markings and signs that are illegible shall be corrected.

Refrigerating pipe or components are installed in a position where they are unlikely to be exposed to any substance which may corrode refrigerant containing components, unless the components are constructed of materials which are inherently resistant to being corroded or are suitably protected against being so corroded.

Checks to Electrical Devices:

Repair and maintenance to electrical components shall include initial safety checks and component inspection procedures. If a fault exists that could compromise safety, then no electrical supply shall be connected to the circuit until it is satisfactorily dealt with. If the fault cannot be corrected immediately but it is necessary to continue operation, an adequate temporary solution shall be used. This shall be reported to the owner of the equipment so all parties are advised.

© 2023 Marmon Foodservice Technologies, Inc 230410
All sales subject to terms and conditions applicable at time of sale. marmonfoodservice.com/tandcsale

R290 Safety Information

Initial safety checks shall include and ensure:

That capacitors are discharged: this shall be done in a safe manner to avoid possibility of sparking;

Discharge capacitors in a way that won't cause any spark, using a Supco CapDis tool.

That no live electrical components and wiring are exposed while charging, recovering or purging the system; that there is continuity of earth bonding.

Repairs to Sealed Components:

During repairs to sealed components, all electrical supplies shall be disconnected from equipment being worked upon prior to any removal of sealed covers, etc. If it is absolutely necessary to have an electrical supply to equipment during servicing, then a permanently operating form of leak detection shall be located at the most critical point to warn of a potentially hazardous situation.

Particular attention shall be paid to the following to ensure that by working on electrical components, the casing is not altered in such a way that the level of protection is affected. This shall include damage to cables, excessive number of connections, terminals not made to original specification, damage to seals, incorrect fitting of glands, etc.

Ensure that the apparatus is mounted securely.

Ensure that seals or sealing materials have not degraded to the point that they no longer serve the purpose of preventing the ingress of flammable atmospheres. Replacement parts shall be in accordance with the manufacturer's specifications.

Repair to Intrinsically Safe Components:

Do not apply any permanent inductive or capacitance loads to the circuit without ensuring that this will not exceed the permissible voltage and current permitted for the equipment in use.

Intrinsically safe components are the only types that can be worked on while live in the presence of a flammable atmosphere. The test apparatus shall be at the correct rating.

Replace components only with parts specified by the manufacturer. Other parts may result in the ignition of refrigerant in the atmosphere from a leak.

NOTE: The use of silicon sealant can inhibit the effectiveness of some types of leak detection equipment. Intrinsically safe components do not have to be isolated prior to working on them.

Cabling:

Check that cabling will not be subject to wear, corrosion, excessive pressure, vibration, sharp edges or any other adverse physical or environmental effects. The check shall also take into account the effects of aging or continual vibration from sources such as compressors or fans.

Detection of Flammable Refrigerants:

Under no circumstances shall potential sources of ignition be used in the searching for or detection of refrigerant leaks.

© 2023 Marmon Foodservice Technologies, Inc 230410
All sales subject to terms and conditions applicable at time of sale. marmonfoodservice.com/tandcsale

R290 Safety Information

CAUTION:

Risk of Fire or Explosion Due To Open Flame. A halide torch (or any other detector using a naked flame) shall not be used.

The following leak detection methods are deemed acceptable for all refrigerant systems:

Electronic leak detectors may be used to detect refrigerant leaks but, in the case of **FLAMMABLE REFRIGERANTS,** the sensitivity may not be adequate, or may need re-calibration. (NOTE: Detection equipment shall be calibrated in a refrigerant-free area.) Ensure that the detector is not a potential source of ignition and is suitable for the refrigerant used.

Leak detection equipment shall be set at a percentage of the LFL of the refrigerant and shall be calibrated to the refrigerant employed, and the appropriate percentage of gas (25% maximum) is confirmed.

Leak detection fluids are also suitable for use with most refrigerants but the use of detergents containing chlorine shall be avoided as the chlorine may react with the refrigerant and corrode the copper pipe-work.

Avoid the use of dish-washing soap/water as a leak-detection fluid.

NOTE: Examples of leak detection fluids are:

Bubble method

Fluorescent method agents

If a leak is suspected, all naked flames shall be removed/extinguished.

If a leakage of refrigerant is found which requires brazing, all of the refrigerant shall be recovered from the system, or isolated (by means of shut off valves) in a part of the system remote from the leak.

Removal and Evacuation:

When breaking into the refrigerant circuit to make repairs – or for any other purpose – conventional procedures shall be used. However, for flammable refrigerants it is important that best practices be followed since flammability is a consideration. The following procedure shall be adhered to:

a) Safely remove refrigerant following local and national regulations

b) Purge the circuit with inert gas

c) Evacuate (optional for A2L)

d) Purge with inert gas (optional for A2L)

e) Open the circuit by cutting or brazing

The refrigerant charge shall be recovered into the correct recovery cylinders if venting is not allowed by local and national codes. For appliances containing flammable refrigerants, the system shall be purged with oxygen-free nitrogen to render the appliance safe for flammable refrigerants. This process might need to be repeated several times. Compressed air or oxygen shall not be used for purging refrigerant systems.

© 2023 Marmon Foodservice Technologies, Inc 230410
All sales subject to terms and conditions applicable at time of sale. marmonfoodservice.com/tandcsale

R290 Safety Information

For appliances containing flammable refrigerants, refrigerants purging shall be achieved by breaking the vacuum in the system with oxygen-free nitrogen and continuing to fill until the working pressure is achieved, then venting to atmosphere, and finally pulling down to a vacuum (optional for A2L). This process shall be repeated until no refrigerant is within the system (optional for A2L). When the final oxygen-free nitrogen charge is used, the system shall be vented down to atmospheric pressure to enable work to take place.

Ensure that the outlet for the vacuum pump is not close to any potential ignition sources and that ventilation is available.

Charging Procedures:

In addition to conventional charging procedures, the following requirements shall be followed.

WARNING:

Ensure that contamination of different refrigerants does not occur when using charging equipment. Hoses or lines shall be as short as possible to minimize the amount of refrigerant contained in them.

WARNING:

Cylinders shall be kept in an appropriate position according to the instructions.

WARNING:

Ensure that the REFRIGERATING SYSTEM is earthed prior to charging the system with refrigerant.

WARNING:

Label the system when charging is complete (if not already).

WARNING:

Extreme care shall be taken not to overfill the REFRIGERATING SYSTEM.

Prior to recharging the system, it shall be pressure-tested with the appropriate purging gas. The system shall be leak-tested on completion of charging but prior to commissioning. A follow-up, leak test shall be carried out prior to leaving the site.

© 2023 Marmon Foodservice Technologies, Inc 230410
All sales subject to terms and conditions applicable at time of sale. marmonfoodservice.com/tandcsale

Additional Operating Safety Information



WARNING: Risk of Electric Shock

Always unplug the power cord before servicing the unit or removing the back panel or front apron to avoid electric shock.

Unit MUST be plugged into a 3-prong plug for grounding. Cutting off the grounding spike on the power cord could result in electric shock to the operator during operation.

Unit must be plugged into a 15 or 20 ampere fuse- or breaker-protected circuit. Use of a larger fuse or breaker could result in damage to the unit and electric shock to the operator.



WARNING: Moving or Handling Hot Parts

Some parts may remain hot even after being unplugged. Always use caution when servicing.



WARNING: Possible Back Injury

Assistance in moving this piece of equipment is strongly recommended to avoid injury.

Always lift with your legs and not your back when lifting this unit.

© 2023 Marmon Foodservice Technologies, Inc 230410
All sales subject to terms and conditions applicable at time of sale. marmonfoodservice.com/tandcsale

Air Curtain Installation

NOTE: DO NOT OPERATE THE REFRIGERATOR WITHOUT THE AIR CURTAIN INSTALLED!

APPLIES TO THESE MODELS: SKP278A, SKP2712A, SKPZ27(D), SKR24A, SKR27A(D), SKF27A(D), SKR48A, SKP4812A, SKRN48, SKPZ60(D), SKPZ72(D), SKPZ92(D)

DO NOT OPERATE UNIT WITHOUT AIR CURTAIN INSTALLED

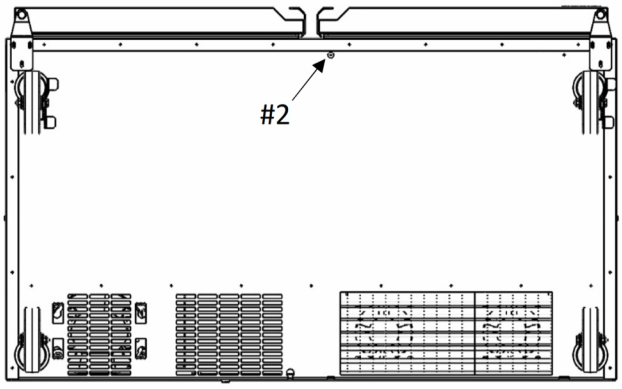

SKR48A SHOWN

1. Disconnect unit from power source.
2. Tip the unit on its back and loosen the center screw along the front bottom edge of the base.
3. Insert the tab on the end of the air curtain into the slot located along the rear lower edge of the unit.
4. Slip the opposite end of the air curtain under the screw head loosened in step #2 and tighten screw to secure the air curtain to the base.
5. Return unit to original upright position.

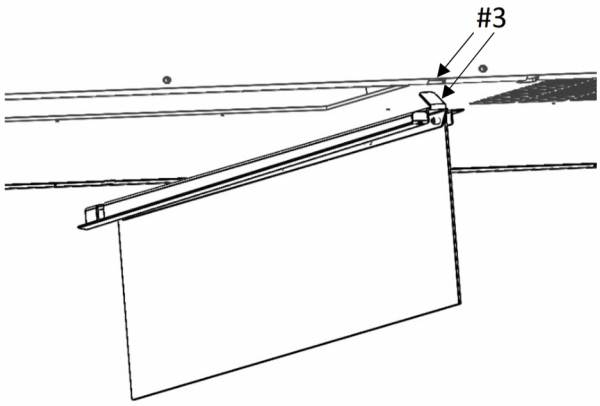

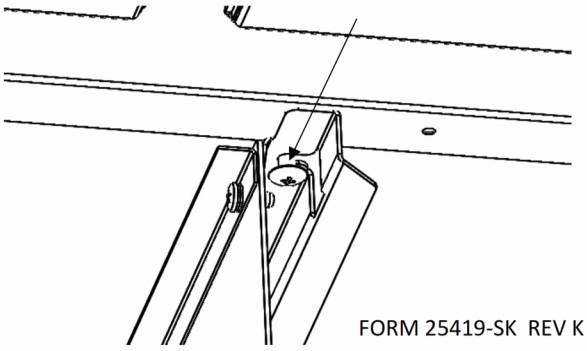

FORM 25419-SK REV K

Figure 1

© 2023 Marmon Foodservice Technologies, Inc 230410
All sales subject to terms and conditions applicable at time of sale. marmonfoodservice.com/tandcsale

Startup and Operation

Initial Startup

After satisfying the installation requirements, the refrigerator is ready to operate.

NOTE: Only load product that is at the correct temperature for the unit.

1) Plug the power cord into a suitable receptacle and the compressor will start

2) If the Compressor does not start when the unit is connected to power, ensure that the Temperature Control is not in the “off” position.

3) Allow the unit to run for two hours before loading it with product. When loading the unit with product, take care not to block the air flow in the cabinet as this would affect performance.

Operation

Temperature Control

The Temperature Control is located on the back panel of the cabinet and is factory set to maintain an average cabinet temperature of approximately zero (0) degrees F (-18 Degrees Celsius). To obtain colder temperatures, press and hold the set but ton until the set point value flashes. Use the up or down arrow buttons to change the value and then press the set button again. Allow the unit a minimum of one hour to respond to a control setting adjustment.

Defrost

The Silver King unit includes an automatic defrost system. No additional plumbing is required. Automatic defrosting is accomplished by a defrost heater and timer. Defrost water is collected in a pan located in the compressor compartment where it is evaporated into the room air. It is important that the unit be level so the condensate can drain properly and efficiently evaporate the water.

© 2023 Marmon Foodservice Technologies, Inc 230410
All sales subject to terms and conditions applicable at time of sale. marmonfoodservice.com/tandcsale

Maintenance

Preventative maintenance is minimal although these few steps are very important to continued operation and maximizing the life of the appliance.

Cabinet Surfaces

The cabinet interior is aluminum and stainless steel and the exterior is stainless steel. These surfaces should be cleaned periodically with a solution of warm water and mild soap, rinsed and wiped dry with a soft cloth. A good stainless steel cleaner can also be used. Should a surface become stained, do not attempt to clean with an abrasive cleanser or scouring pad. Use a soft cleanser and rub with the grain of the metal to avoid scratching the surface. Do not use chlorinated cleaners. Always rinse well and dry after cleaning.

Condenser

Periodically, dust on the condenser coil must be cleaned. The condenser is located on the bottom-rear of the unit. Clean the accumulated dust/debris from the condenser with a vacuum and brush, or by using a chemical cleaning agent (Nu-Calgon 4171-75 or equivalent). Perform this regularly to maintain the compressor warranty!

WARNING: The condenser fins are very sharp, use caution when cleaning the condenser.

Drawer Gasket

The gasket will collect dirt and should be wiped clean with a warm, mild soapy water solution to extend its life and assure positive sealing.

© 2023 Marmon Foodservice Technologies, Inc 230410
All sales subject to terms and conditions applicable at time of sale. marmonfoodservice.com/tandcsale

Parts List & Exploded View

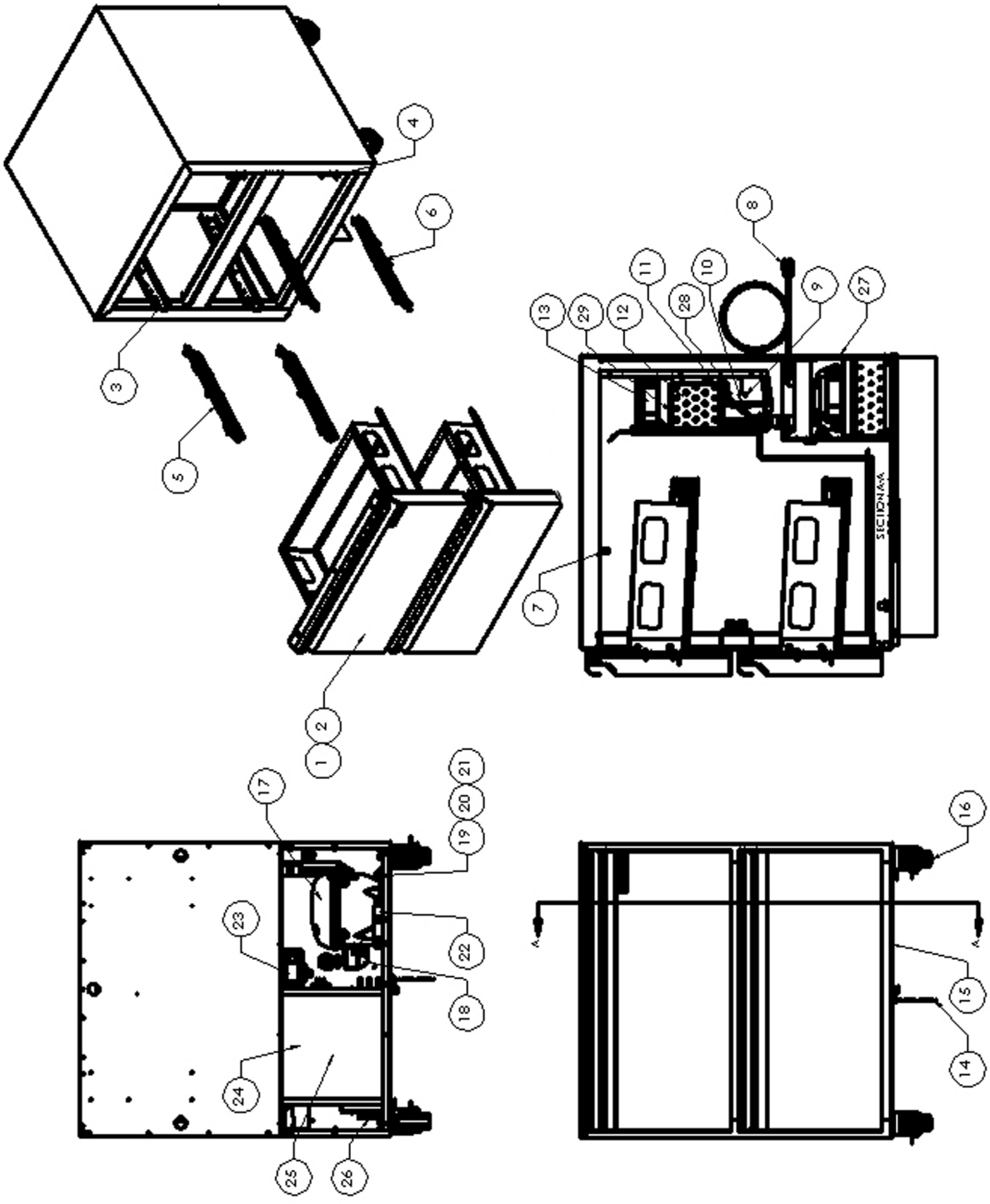

Figure 2

Refer to next page for parts listing.

© 2023 Marmon Foodservice Technologies, Inc 230410
All sales subject to terms and conditions applicable at time of sale. marmonfoodservice.com/tandcsale

Parts List & Exploded View

ITEM NO.	PART DESCRIPTION	PART NO.
1	DRAWER ASSEMBLY COMPLETE	39959
2	DRAWER GASKET	10310-76
3	KIT SLIDES 15.75" (FOR ONE DRAWER)	10451-04
4		
5		
6		
7	TEMPERATURE INDICATOR	22409-SK
8	POWER CORD 115V	32199-SK
9	TEMPERATURE PROBE 60" BLACK	46128
10	DEFROST HEATER EVAPORATOR	47076-SK
11	CAPILLARY TUBE EVAPORATOR	99035
12	EVAPORATOR COIL	38337
13	EVAPORATOR FAN MOTOR 115V/230V	39577
14	AIR CURTAIN ASSEMBLY	38353
15	FILTER CONDENSER (OPTIONAL)	31221-SK
16	CASTER KIT 2"	10314-100
	CASTER KIT 3"	10314-63
17	KIT COMPRESSOR W/ ELECTRICALS 115V/60HZ	11700-2
18	KIT ELECTRICALS 115V (RELAY, OVERLOAD, RUN CAPACITIOR)	11701-2
19	GROMMET COMPRESSOR MOUNT	20481-SK
20	WASHER COMPRESSOR MOUNT	22401-SK
21	HAIRPIN CLIP COMPRESSOR MOUNT	98106
22	DRIER	22677-SK
23	ELECTRONIC TEMPERATURE CONTROL 115V (PROGRMD)	45768
24	CONDENSATE PAN ASSEMBLY	38379
25	CONDENSER FAN MOTOR 115V/230V	39577
26	CONDENSER COIL	39259
27	REAR PANEL	45250
28	DEFROST CUTOUT SWITCH	620048010
29	DEFROST PROBE EVAPORATOR (GREEN)	46127-SK

FORM 45070-SK REV. E (PCN73121)

WHEN ORDERING REPLACEMENT PARTS, PLEASE PROVIDE MODEL AND SERIAL NUMBERS.

© 2023 Marmon Foodservice Technologies, Inc 230410
All sales subject to terms and conditions applicable at time of sale. marmonfoodservice.com/tandcsale

Electrical Schematic

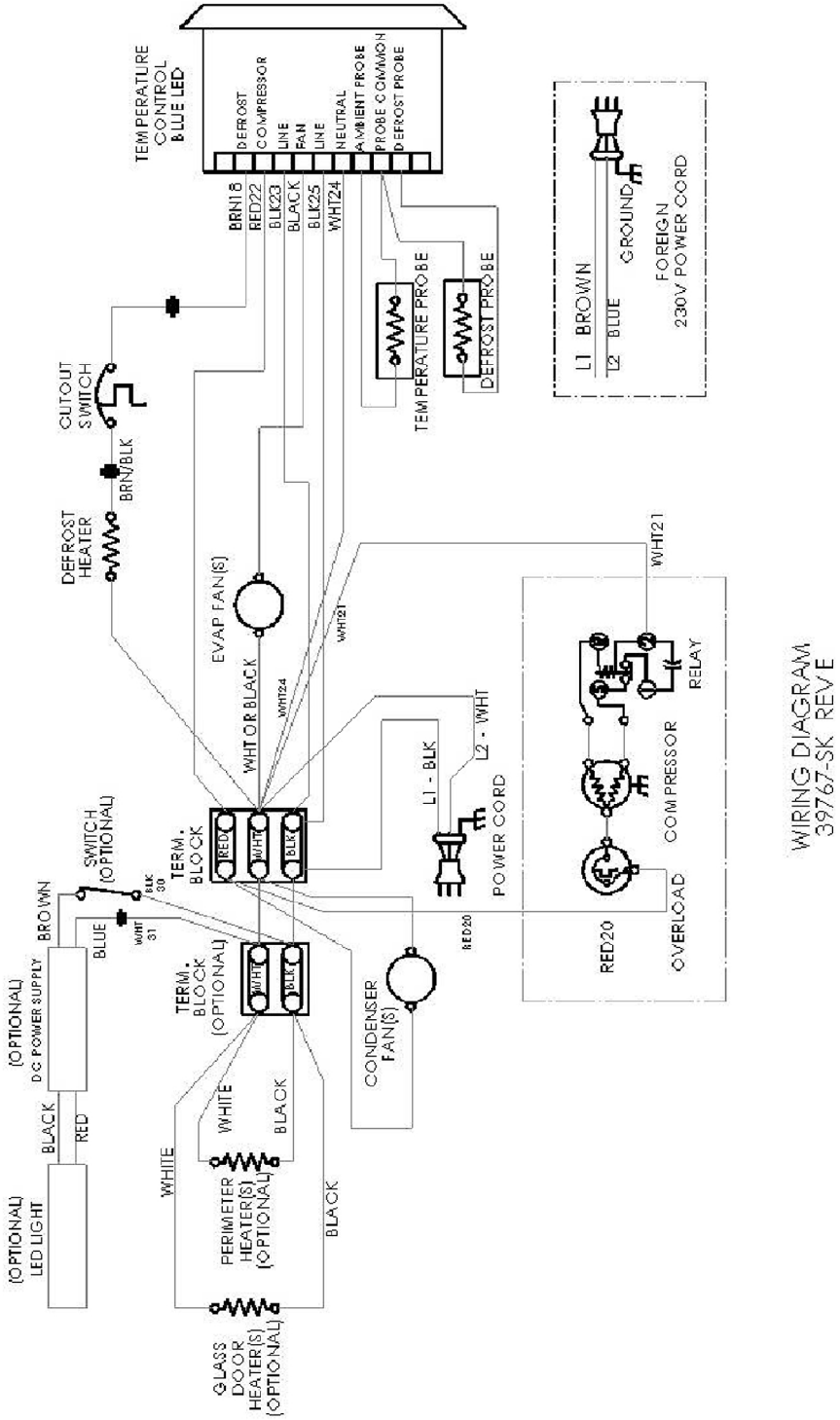

Figure 3

© 2023 Marmon Foodservice Technologies, Inc 230410
All sales subject to terms and conditions applicable at time of sale. marmonfoodservice.com/tandcsale

Thermistor Field Testing

Use the guide below to test if a thermistor (temperature probe) is functioning properly. See the Replacement Parts List for part number information. Table 2 is valid for all thermistors listed in Table 1.

Table 1

Thermistor Description	Part Number
60” black	46128
120” black	46141
60” green	46127
120” green	46140
96” black	38822

Establish Thermistor Temperature

1) Check the displayed temperature reading.

2) If a thermometer is available, use it to confirm the displayed temperature reading by measuring the temperature at the thermistor.

3) If the previously stated tasks cannot be performed, use any reasonable means to estimate the thermistor temperature.

See form M164 for ice bath method. (ice water is 32°F).

Multimeter Set-up

1) Use a multimeter and set it to the resistance (Ω) setting. See Figure 4.

.

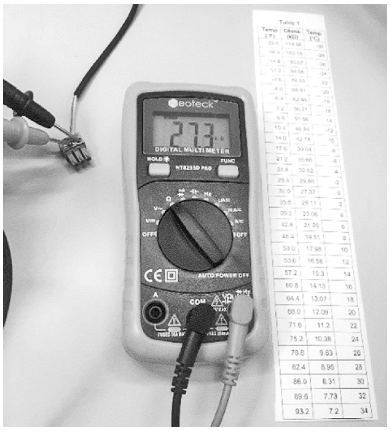

Figure 4

2) Disconnect the thermistor from the controller, then connect the multimeter to the thermistor.

3) Compare the multimeter resistance reading to Table 1 temperature value.

Analyze Results

OK - If resistance and temperature are similar, the thermistor is within specification.

REPLACE - If the resistance and temperature are not similar or the resistance’s value is not on Table 1, then the thermistor is not working properly. Replace it.

REPLACE - If the resistance is over-limit, the thermistor has failed. Replace it.

Table 2

Temp (° F)	Ohms (kΩ)	Temp (° C)
-4.0	67.8	-20
-0.4	61.5	-18
3.2	56.0	-16
6.8	51.0	-14
10.4	46.5	-12
14.0	42.5	-10
17.6	38.8	-8
21.2	35.4	-6
24.8	32.4	-4
28.4	29.7	-2
32.0	27.3	0
35.6	25.0	2
39.2	23.0	4
42.8	21.2	6
46.4	19.5	8
50.0	18.0	10
53.6	16.6	12
57.2	15.3	14
60.8	14.1	16
64.4	13.0	18
68.0	12.1	20
71.6	11.2	22
75.2	10.4	24
78.8	9.6	26
82.4	8.9	28
86.0	8.3	30
89.6	7.7	32
93.2	7.2	34
96.8	6.7	36
100.4	6.3	38
104	5.8	40

© 2023 Marmon Foodservice Technologies, Inc 230410
All sales subject to terms and conditions applicable at time of sale. marmonfoodservice.com/tandcsale

© 2023 Marmon Foodservice Technologies, Inc 230410
All sales subject to terms and conditions applicable at time of sale. marmonfoodservice.com/tandcsale