OPERATOR'S MANUAL



Model PH61
Heat Treatment Shake Freezer

Original Operating Instructions

048119-M

8/1/07 (Original Publication)
(Updated 8/21/2020)

Complete this page for quick reference when service is required:

Taylor distributor: _____

Address:_____

Phone: _____

Service: _____

Parts: _____

Date of Installation: _____

Information found on the data label:

Model Number: _____

Serial Number:_____

Electrical Specs: Voltage_____ Cycle_____

Phase_____

Maximum Fuse Size: _____ A

Minimum Wire Ampacity: _____ A

Note: *Continuing research results in steady improvements; therefore, information in this manual is subject to change without notice.*

Note: *Only instructions originating from the factory or its authorized translation representative(s) are considered to be the original set of instructions.*

© 2008 Taylor Company

048119-M

Any unauthorized reproduction, disclosure, or distribution of copies by any person of any portion of this work may be a violation of copyright law of the United States of America and other countries, could result in the awarding of statutory damages of up to $250,000 (17 USC 504) for infringement, and may result in further civil and criminal penalties. All rights reserved.

TAYLOR®

Taylor Company
750 N. Blackhawk Blvd.
Rockton, IL 61072

Table of Contents

Section 1: To the Installer

Installer Safety 1-1
Site Preparation 1-1
Air-Cooled Machines 1-2
Water Connections 1-2
Electrical Connections 1-2
Beater Rotation 1-3
Refrigerant 1-3

Section 2: To the Operator

Compressor Warranty Disclaimer 2-2

Section 3: Safety

Section 4: Operator Parts Identification

Model PH61 4-1
Beater and Door Assembly 4-3
X57028-14 Pump A.—Mix Simplified 4-5
Accessories 4-6
X44127 Brush A.—Package-HT-SS 4-7
Syrup Tank 4-8

Section 5: User Interface

Symbol Definitions 5-1
Power Switch 5-2
Liquid Crystal Display 5-2
Indicator Lights 5-2
Reset Mechanism 5-2
Operating Screen Descriptions 5-2
Operator Menu 5-5

Table of Contents

Section 6: Operating Procedures

Equipment Setup 6-1
Freezing Cylinder Assembly 6-1
Mix Hopper Assembly 6-5
Sanitizing 6-8
Priming 6-9
Daily Closing Procedures 6-10
Daily Opening Procedures 6-13
Syrup System 6-14
Closing Procedures 6-17
Draining Product from the Freezing Cylinder 6-18
Rinsing 6-18
Cleaning and Sanitizing 6-19
Disassembly 6-19
Brush Cleaning 6-21
Sanitizing the Syrup Systems 6-22

Section 7: Operator Checklist

During Cleaning and Sanitizing 7-1
Troubleshooting Bacterial Count 7-1
Regular Maintenance Checks 7-1
Winter Storage 7-2

Section 8: Troubleshooting Guide

Section 9: Parts Replacement Schedule

Section 10: Limited Warranty on Equipment

Section 11: Limited Warranty on Parts

The following information has been included in the manual as safety and regulatory guidelines. For complete installation instructions, please see the Installation Checklist.

Installer Safety

 ***IMPORTANT!*** *In all areas of the world, the machine should be installed in accordance with existing local codes. Please contact your local authorities if you have any questions.*

Care should be taken to ensure that all basic safety practices are followed during the installation and servicing activities related to the installation and service of Taylor machines.

- Only Taylor service personnel should perform installation and repairs on the machine.
- Authorized service personnel should consult OSHA Standard 29CFRI910.147 or the applicable code of the local area for the industry standards on lockout/tagout procedures before beginning any installation or repairs.
- Authorized service personnel must ensure that the proper personal protective equipment (PPE) is available and worn when required during installation and service.
- Authorized service personnel must remove all metal jewelry, rings, and watches before working on electrical equipment.

 **DANGER!** The main power supply(s) to the machine must be disconnected prior to performing any installation, maintenance, or repairs. Failure to follow this instruction may result in personal injury or death from electrical shock or hazardous moving parts, as well as poor performance or damage to the machine.

All repairs must be performed by a Taylor service technician.

 **WARNING!** This machine has many sharp edges that can cause severe injuries.

Site Preparation

Review the area where the machine will be installed before uncrating the machine. Make sure all possible hazards to the user or equipment have been addressed.

For Indoor Use Only: This machine is designed to operate indoors, under normal ambient temperatures of 70°F to 75°F (21°C to 24°C). The freezer has successfully performed in high ambient temperatures of 104°F (40°C) at reduced capacities.

 **WARNING!** This machine must **NOT** be installed in an area where a water jet or hose can be used. **NEVER** use a water jet or hose to rinse or clean the machine. Failure to follow this instruction may result in electrocution.

 **WARNING**! Only install this machine in a location where its use and maintenance is restricted to trained personnel. Failure to comply may result in personal injury.

 **CAUTION!** This machine must be installed on a level surface to avoid the hazard of tipping. Extreme care should be taken in moving this machine for any reason. Two or more persons are required to safely move this machine. Failure to comply may result in personal injury or damage to the machine.

The authorized installer should inspect the machine and promptly report any damage to the local authorized Taylor distributor.

This machine is made using USA sizes of hardware. All metric conversions are approximate and vary in size.

Air-Cooled Machines

Do not obstruct air intake and discharge openings:

Air-cooled units require a minimum of 6 in. (152 mm) of clearance around all sides of the freezer. Failure to allow adequate clearance can reduce the refrigeration capacity of the freezer and possibly cause permanent damage to the compressors.

Water Connections

(Water-Cooled Machines Only)

An adequate cold water supply must be provided with a hand shutoff valve. On the rear of the machine, two 3/8 in. I.P.S. water connections for inlet and outlet are provided for easy hookup. Permanently connect the machine using 1/2 in. (12.7 mm) inside diameter water lines. (Flexible lines are recommended, if local codes permit.) Depending on local water conditions, it may be advisable to install a water strainer to prevent foreign substances from clogging the automatic water valve. There will be only one water-in and one water-out connection. **Do not** install a hand shutoff valve on the water-out line. Water should always flow in this order: first, through the automatic water valve; second, through the condenser; and third, through the outlet fitting to an open trap drain.



IMPORTANT! *A backflow prevention device is required on the incoming water connection side. Please see the applicable national, state, and local codes for determining the proper configuration. Water pressure to the unit must not exceed 150 psi (1034 kPa).*

Electrical Connections



IMPORTANT! *In the United States, this machine is intended to be installed in accordance with the National Electrical Code (NEC), ANSI/NFPA 701987. The purpose of the NEC code is the practical safeguarding of persons and property from hazards arising from the use of electricity. This code contains provisions considered necessary for safety.*

In all other areas of the world, the machine should be installed in accordance with the existing local codes. Please contact your local authorities if you have any questions.

Each machine requires one power supply for each data label on the machine. Check the data label(s) on the machine for branch circuit overcurrent protection or fuse, circuit ampacity, and other electrical specifications.

See the wiring diagram provided inside the electrical box for proper power connections.



WARNING! This machine must be properly grounded. Failure to do so can result in severe personal injury from electrical shock.



IMPORTANT! *An equipotential grounding lug is provided with this machine. Some countries require the grounding lug to be properly attached to the rear of the frame by the authorized installer. The installation location is marked by the equipotential bonding symbol (5021 of IEC 60417-1) on both the removable panel and the machine's frame.*



IMPORTANT!

- *Stationary machines which are not equipped with a power cord and a plug or another device to disconnect the machine from the power source must have an all-pole disconnecting device with a contact gap of at least 0.125 in. (3 mm) in the external installation.*
- *Machines that are permanently connected to*

fixed wiring and for which leakage currents may exceed 10 mA, particularly when disconnected or not used for long periods, or during initial installation, shall have protective devices to protect against the leakage of current, such as a GFI, installed by authorized personnel to local codes.

- *Supply cords used with this machine shall be oil-resistant, sheathed flexible cable not lighter than ordinary polychloroprene or other equivalent synthetic elastomer-sheathed cord (code designation 60245 IEC 57) installed with the proper cord anchorage to relieve conductors from strain, including twisting, at the terminals and protect the insulation of the conductors from abrasion.*
- *If the supply cord is damaged, it must be replaced by a Taylor service technician to avoid a hazard.*
- *Secure supply cord ground lead to machine in a location where if the cord is pulled the main power leads become taut before the ground lead can break loose.*

Beater Rotation

 **NOTICE!** Beater rotation must be clockwise as viewed looking into the freezing cylinder.

To correct the rotation on a three-phase machine, interchange any two incoming power supply lines at the freezer main terminal block only. To correct rotation on a single-phase machine, exchange leads inside the beater motor. (Follow the diagram printed on the motor.)

Electrical connections are made directly to the terminal block provided in the main control box, located behind the service panel.

It is recommended that beater rotation adjustment be performed by a Taylor service technician.

Refrigerant

 **CAUTION!** This machine contains fluorinated greenhouse gases (F-Gas) to provide refrigeration using a hermetically sealed circuit or within foam insulation. This machine's type of gas, quantity, Global Warming Potential (GWP), and CO_2 tonnes equivalent information is recorded on the machine's data label. The refrigerant used is generally considered nontoxic and nonflammable. However any gas under pressure is potentially hazardous and must be handled with caution.

NEVER fill any refrigerant cylinder completely with liquid. Filling the cylinder approximately 80% will allow for normal expansion.

 **CAUTION!** Use only approved refrigerant listed on the machine's data label or authorized through a manufacturer's technical bulletin. The use of any other refrigerant may expose users and operators to unexpected safety hazards.

 **WARNING!** Refrigerant liquid sprayed onto the skin may cause serious damage to tissue. Keep eyes and skin protected. If refrigerant burns should occur, flush the area immediately with cold water. If burns are severe, apply ice packs and contact a physician immediately.

 **NOTICE!** Taylor reminds technicians to be aware of and in compliance with local government laws regarding refrigerant recovery, recycling, and reclaiming systems. For information regarding applicable local laws, please contact your local authorized Taylor distributor.

 ***IMPORTANT!*** *Refrigerants and their associated lubricants may be extremely moisture absorbent. When opening a refrigeration system, the maximum time the system is open must not exceed 15 minutes. Cap all open tubing to prevent humid air or water from being absorbed by the oil.*

Notes:

The freezer you have purchased has been carefully engineered and manufactured to give you dependable operation. When properly operated and cared for, it will produce a consistent quality product. Like all mechanical products, this machine will require cleaning and maintenance. A minimum amount of care and attention is necessary if the operating procedures outlined in this manual are followed closely.

Note: When your machine is delivered or if it has been in the OFF position for more than 24 hours, disassemble the freezer following the procedures found on page 6-19. Follow the assembly procedures on page 6-1 to reassemble your machine.

Note: The machine must be disassembled, cleaned, sanitized, and lubricated every two weeks.

ALWAYS FOLLOW LOCAL HEALTH CODES.

During the heat treatment process, the product is brought to a temperature sufficient to destroy bacteria and is returned to a standby temperature.

The special control system will ensure that the product is heated and maintained at the set temperature for the full 30 minutes. This time is required to ensure that bacteria is destroyed.
If the freezer was unable to complete the heating cycle, the screen will read **HEAT TREAT CYCLE FAILURE - FREEZER LOCKED - PRESS SEL KEY**.

If this is the case, or if you require technical assistance, please contact your local authorized Taylor distributor.

Note: *Your Taylor warranty is valid only if the parts are authorized Taylor parts, purchased from the local authorized Taylor distributor, and only if all required service work is provided by an authorized Taylor service technician. Taylor reserves the right to deny warranty claims on units or parts if Taylor-unapproved parts or incorrect refrigerant were installed in the unit, system modifications were performed beyond factory recommendations, or it is determined that the failure was caused by abuse, misuse, neglect, or failure to follow all operating instructions. For full details of your Taylor warranty, please see the Limited Warranty section in this manual*.

Note: *Constant research results in steady improvements; therefore, information in this manual is subject to change without notice.*

IMPORTANT! *This manual should be read before operating or performing any maintenance on the machine.*

*Your Taylor machine will **NOT** compensate for and/or correct any errors made during the setup or filling operations. Thus, the initial assembly, setup, and priming procedures are of extreme importance. It is strongly recommended that all personnel responsible for the machine's operation, including assembly and disassembly, go through these procedures together in order to be properly trained and to make sure that all personnel understand their role in using and maintaining the machine.*

In the event you should require technical assistance, please contact your local authorized Taylor distributor.

IMPORTANT! *If the crossed-out wheeled-bin symbol is affixed to this machine, it signifies that this machine is compliant with the EU Directives as well as other similar end-of-life legislation in effect after August 13, 2005. Therefore, it must be collected separately after its use is completed and cannot be disposed as unsorted municipal waste.*

The user is responsible for delivering the machine to the appropriate collection facility, as specified by your local code.

For additional information regarding applicable local disposal laws, please contact the municipal waste facility and/or local authorized Taylor distributor.

Compressor Warranty Disclaimer

The refrigeration compressor(s) on this machine are warranted for the term stated in the Limited Warranty section in this manual. However, due to the Montreal Protocol and the U.S. Clean Air Act Amendments of 1990, many new refrigerants are being tested and developed, thus seeking their way into the service industry. Some of these new refrigerants are being advertised as drop-in replacements for numerous applications. It should be noted that in the event of ordinary service to this machine's refrigeration system, **only the refrigerant specified on the affixed data label should be used**. The unauthorized use of alternate refrigerants will void your Taylor compressor warranty. It is the machine owner's responsibility to make this fact known to any technician he/she employs.

It should also be noted that Taylor does not warrant the refrigerant used in its equipment. For example, if the refrigerant is lost during the course of ordinary service to this machine, Taylor has no obligation to either supply or provide replacement refrigerant either at billable or unbillable terms. Taylor will recommend a suitable replacement if the original refrigerant is banned, obsoleted, or no longer available during the 5-year Taylor warranty of the compressor.

From time-to-time Taylor may test new refrigerant alternates. Should a new refrigerant alternate prove, through Taylor's testing, that it would be accepted as a drop-in replacement for this machine, the disclaimer in this Compressor Warranty Disclaimer section will not apply to the use of the alternate refrigerant approved by Taylor.

To find out the current status of an alternate refrigerant as it relates to your compressor warranty, call Taylor or your local authorized Taylor distributor. Be prepared to provide the model/serial number of the machine in question.

Note: *Continuing research results in steady improvements; therefore, information in this Operator Manual is subject to change without notice.*

We at Taylor Company are concerned about the safety of the operator at all times when they are coming in contact with the machine and its parts. Taylor makes every effort to design and manufacture built-in safety features to protect both operators and service technicians.

Installing and servicing refrigeration machines can be hazardous due to system pressure and electrical components. Only trained and qualified service personnel should install, repair, or service refrigeration equipment. When working on refrigeration equipment, observe precautions noted in the literature, tags, and labels attached to the unit and other safety precautions that may apply. Follow all safety code requirements. Wear safety glasses and work gloves.



DANGER! Failure to adhere to the following safety precautions may result in severe personal injury or death. Failure to comply with these warnings may also damage the machine and/or its components. Such damage may require component replacement and service repair expenses.



NOTICE! DO NOT operate this machine without reading this manual. Failure to follow these instructions may result in machine damage, poor dispenser performance, health hazards, or personal injury.



IMPORTANT! *This machine is to be used only by trained personnel. It is not intended for use, cleaning, or maintenance by children or people with reduced physical, sensory, or mental capabilities, or lack of experience and knowledge, unless given supervision or instruction concerning the use of the machine by a person responsible for their safety. Children should be supervised to ensure that they do not play with the machine.*



WARNING! This machine must **NOT** be installed in an area where a water jet or hose can be used. **NEVER** use a water jet or hose to rinse or clean the machine. Failure to follow this instruction may result in electrocution.



WARNING! Avoid injury.

- **DO NOT** operate the machine unless it is properly grounded.
- **DO NOT** operate the machine with fuses larger than specified on the machine's data label.
- All repairs should be performed by an authorized Taylor service technician.
- The main power supplies to the machine must be disconnected prior to performing installation, repairs, or maintenance.
- **For Cord-Connected Machines:** Only Taylor service technicians or licensed electricians may install a plug or replacement cord on the machine.
- Machines that are permanently connected to fixed wiring and for which leakage currents may exceed 10 mA, particularly when disconnected or not used for long periods, or during initial installation, shall have protective devices to protect against the leakage of current, such as a GFI, installed by the authorized personnel to local codes.
- Stationary machines that are not equipped with a power cord and a plug or another device to disconnect the appliance from the power source must have an all-pole disconnecting device with a contact gap of at least 0.125 in. (3 mm) in the external installation.
- Supply cords used with this machine shall be oil-resistant, sheathed flexible cable not lighter than ordinary polychloroprene or other equivalent synthetic elastomer-sheathed cord (code designation 60245 IEC 57) installed with the proper cord anchorage to relieve conductors from strain, including twisting, at the terminals and protect the insulation of the conductors from abrasion.

- If the supply cord is damaged, it must be replaced by the manufacturer, service agent, or a similarly qualified person to avoid a hazard.
- Secure supply cord ground lead to machine in a location where if the cord is pulled the main power leads become taut before the ground lead can break loose.

Failure to follow these instructions may result in electrocution. Contact your local authorized Taylor distributor for service.



IMPORTANT! *An equipotential grounding lug is provided with this machine. Some countries require the grounding lug to be properly attached to the rear of the frame by the authorized installer. The installation location is marked by the equipotential bonding symbol (5021 of IEC 60417-1) on both the removable panel and the machine's frame.*



WARNING! Avoid injury.

- **DO NOT** allow untrained personnel to operate this machine.
- **DO NOT** put objects or fingers in the door spout.
- **DO NOT** operate the machine unless all service panels and access doors are fastened with screws.
- **DO NOT** remove the machine door or beater assembly unless the control switches are in the OFF position.

Failure to follow these instructions may result in severe personal injury, especially to fingers or hands, from hazardous moving parts.



WARNING! This machine has many sharp edges that can cause severe injuries.

- **DO NOT** put objects or fingers in the door spout. This may contaminate the product and cause severe personal injury from blade contact.
- **USE EXTREME CAUTION** when removing the beater assembly. The scraper blades are very sharp.
- **USE EXTREME CAUTION** when handling the cup/cone dispenser (if supplied with machine). Two people are required to handle the cup/cone dispenser. The appropriate type of protective gloves must be worn and the mounting holes must **NOT** be used to lift or hold the dispenser.

Failure to follow these instructions can result in personal injury or damage to the machine.



WARNING! DO NOT attempt to draw product or disassemble the machine during the Heat Treatment cycle (if equipped). The product is hot and under extreme pressure. Severe burns from hot product may result if this instruction is not followed.



CAUTION! This machine must be placed on a level surface. Extreme care should be taken when moving for any reason. Two or more persons are required to safely move this machine. Failure to comply may result in personal injury or damage to the machine.



DANGER! Some consumers are highly allergic to strawberries. In some severe cases, allergic reactions to strawberries can cause death.

When blending natural strawberry products, make sure excess product is removed from the pitcher to eliminate product carryover.



WARNING! Only install this machine in a location where its use and maintenance is restricted to trained personnel. Failure to comply may result in personal injury.



NOTICE! Cleaning and sanitizing schedules are governed by your federal, state, or local regulatory agencies and must be followed accordingly. Please refer to the cleaning section of this manual for the proper procedure to clean this machine.



CAUTION! This machine is equipped with a refrigerated cabinet designed to maintain product temperature at or below 41°F (5°C). Before replenishing the mix supply, the product must be refrigerated at or below 41°F (5°C). Failure to follow this instruction may result in health hazards and poor freezer performance.

DO NOT run the machine without product. Failure to follow this instruction can result in damage to the machine.

DO NOT obstruct air intake and discharge openings. A minimum of 3 in. (76 mm) air clearance on both sides of the machine is required. It is recommended to place the rear of the machine against the wall to prevent the recirculation of warm air. Failure to follow this instruction may cause poor freezer performance and damage to the machine.

For Indoor Use Only: This machine is designed to operate indoors, under normal ambient temperatures of 70°F to 75°F (21°C to 24°C). The machine has successfully performed in high ambient temperatures of up to 104°F (40°C) at reduced capacities.

Noise Level: Airborne noise emission does not exceed 78 dB(A) when measured at a distance of 39 in. (1.0 m) from the surface of the machine and at a height of 62 in. (1.6 m) from the floor.

Notes:

Model PH61

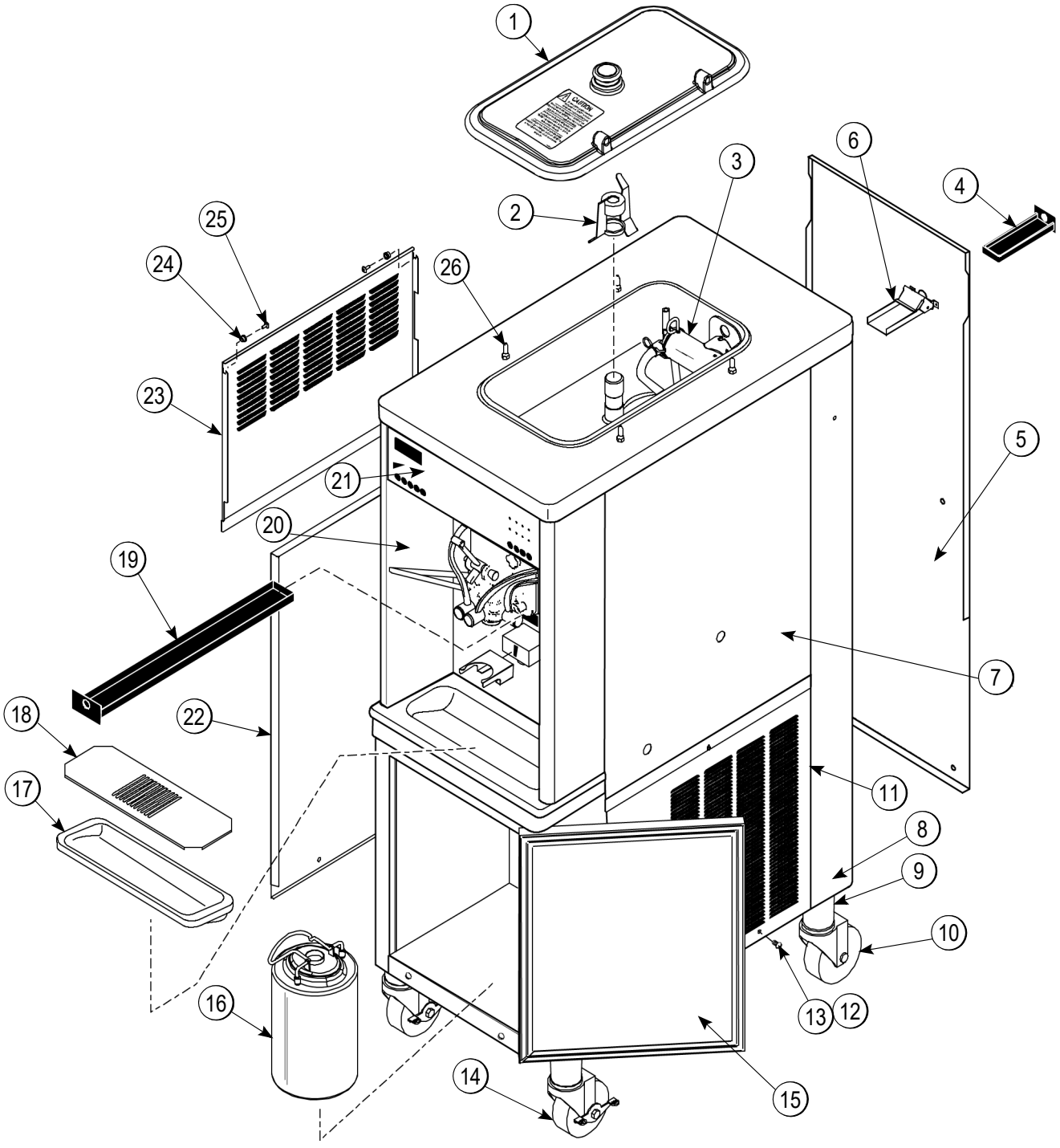

Figure 4-1

Model PH61 Parts Identification

Item	Description	Part No.
1	Kit A.-Cover-Hopper	X65369
2	Agitator A.-Mix Hopper-20	X44797
3	Pump A.-Mix Simplified Shake (See Page 4-5)	X57028-14
4	Pan-Drip HT	048204
5	Panel-Rear·	048203
6	Guide A.-Drip Pan	X45386
7	Panel-Side-Upper-Right	056013
8	Trim-Rear Corner R.	045517
	Trim-Rear Corner L.	045516
9	Adaptor A.-Caster	X18915
10	Caster-4" SWV 5/8 Stem	018794
11	Panel-Lower Side R. PH61	034680
12	Screw-1/4-20X3/8 SLTD RND	011694
13	Fastener-Clip 1/4-20 U-Type	045865

Item	Description	Part No.
14	Caster-4" SWV 5/8 Stem W/Brake	034081
15	Door A.-Syrup Cabinet	X45325
16	Tank-SYR-4·QT	045533
17	Tray-Drip 14-7/8L X 5-1/8 SG	013690
18	Shield-Splash 18"	022763
19	Pan A.-Drip	X28142
20	Panel A.-Front	X55436
21	Decal-Dec-Taylor	052280
22	Panel A.-Lower Side	X24397
23	Panel-Side-Upper-Left	056012
24	Washer-Plastic Pivot	013808
25	Screw-10-24x1/2 Torx	002077
26	Pin-Retaining-Hopper Cover	043934

Beater and Door Assembly

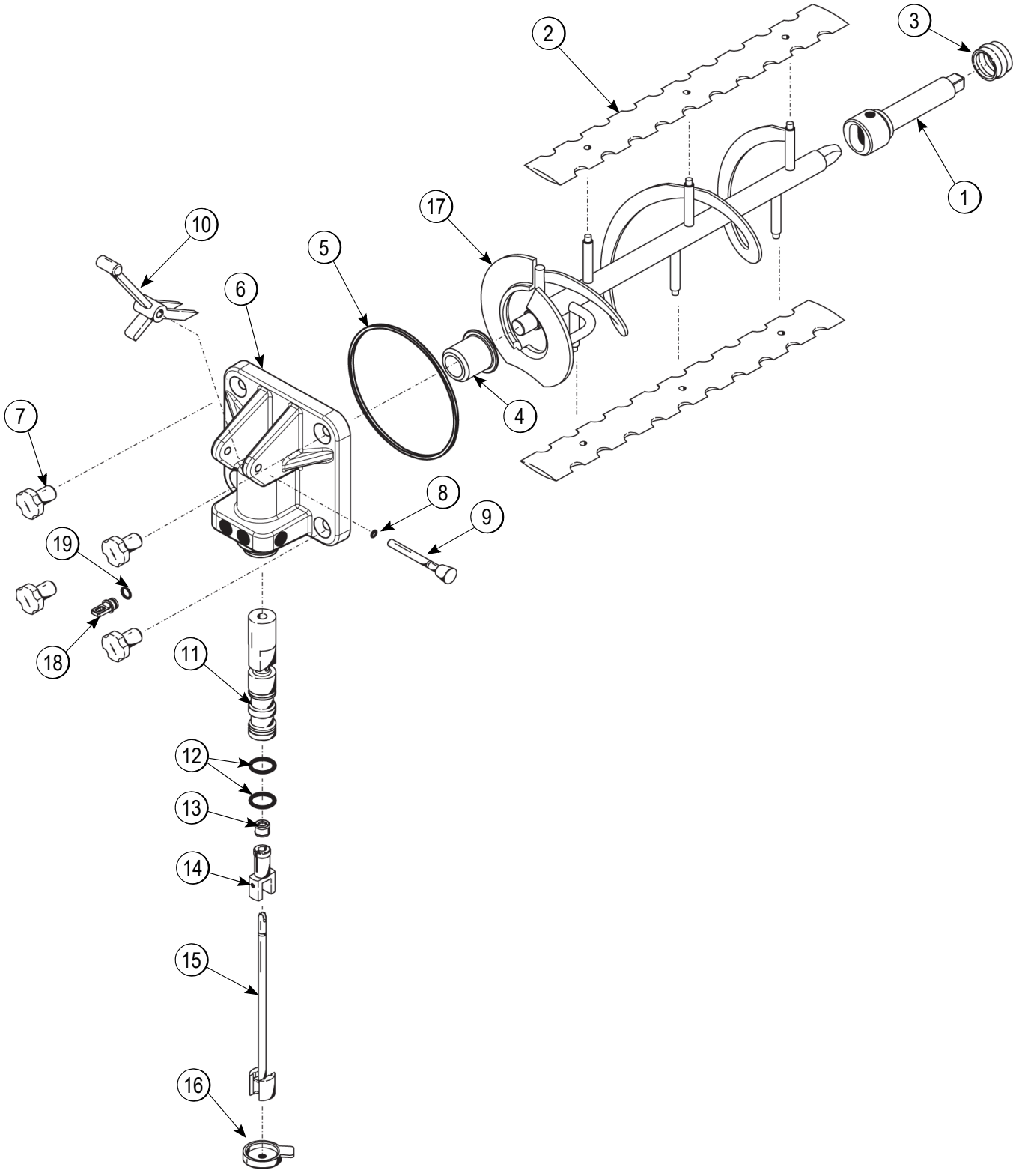

Figure 4-2

Beater and Door Assembly Parts Identification

Item	Description	Part No.
1	Shaft-Beater-7 Qt. Fluted	050985
2	Blade-Scraper	041103
3	Seal-Drive Shaft	032560
4	Bearing-Front	055605
5	O-ring - Freezer Door	033493
6	Door A.-1 SPT-4 FLV-HT	X55724-SER
7	Handscrew (Stud Nut)	034034
8	O-ring - Pivot Pin	016272
9	Pin A.-Pivot	X22820
10	Handle-Draw Valve	034003

Item	Description	Part No.
11	Valve A.-Draw	X42210
12	O-ring - Draw Valve	020571
13	Seal-Spinner Shaft	084696
14	Spinner-Driven	034054
15	Blade A.-Spinner	X41895
16	Cap-Restrictor	033107
17	Beater A.-Shake	X50958
18	Plug-Syrup Hole	026278
19	O-ring	024278

X57028-14 Pump A.—Mix Simplified

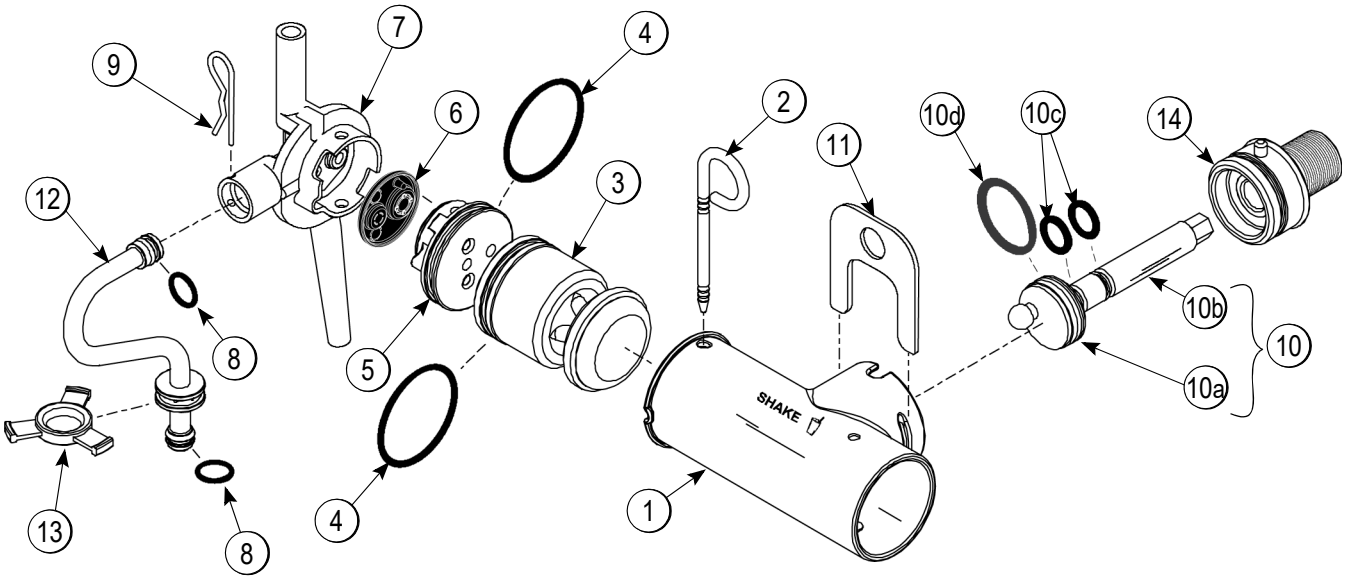

Figure 4-3

Item	Description	Part No.
1-7	Pump A.-Mix Simplified Shake	X57028-14
1	Cylinder-Pump Hopper Shake	057944
2	Pin-Retaining	X55450
3	Piston-Pump-Simplified	053526
4	O-ring-Pkg *50 per Bag*	020051
5	Cap-Valve Body Shake	056873-14
6	Gasket-Simplified Pump Valve	086097
7	Adaptor-Mix Inlet-Shake- Blue	054944
8	O-ring Pkg	016132
9	Pin-Cotter-Hairpin-1/8 Dia	044731

Item	Description	Part No.
10	Shaft A.-Drive-Mix Pump- Hopper	X41947
10a	Crank-Drive-Hopper Mix Pump	039235
10b	Shaft-Drive-Mix Pump-Hopper	041948
10c	O-ring-Pkg *25 per Bag*	048632
10d	O-ring-Pkg *25 per Bag*	008904
11	Clip-Retainer-Mix Pump	044641
12	Tube A.-Feed-Hopper- Shake	X56522
13	Ring-Check-Feed-Tube	056524
14	Sleeve A.-Mix Pump	X44761

Accessories

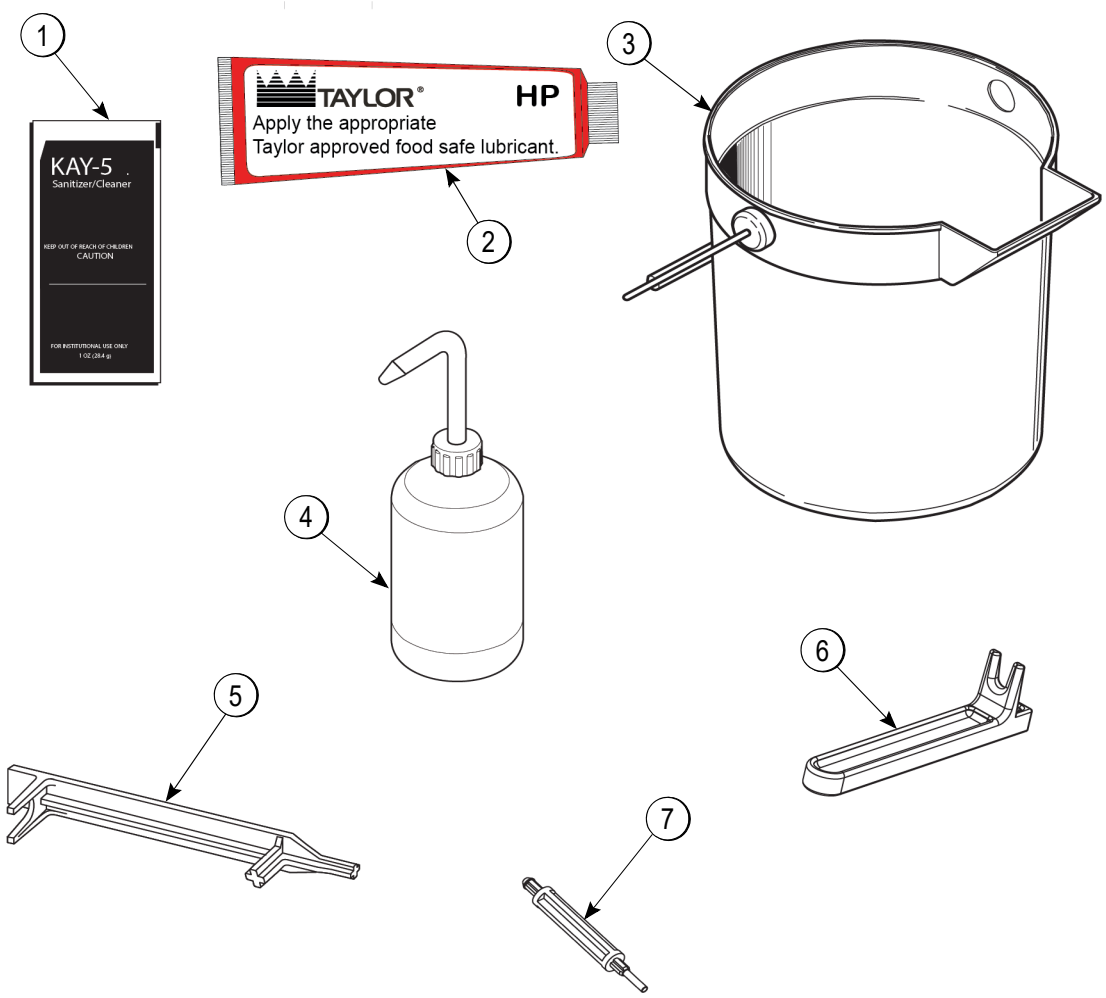

Figure 4-4

Item	Description	Part No.
1	Sanitizer Stera Sheen Green	055492
2	Lubricant-Taylor Hi-Perf.	048232
3	Pail-10 Qt.	013163
4	Bottle A.-Squeeze	X45080
5	Tool-Shaft-Drive Pump HPR/LVB	047919
6	Tool-Shaft-Drive Pump HPR	057167
7	Tool-Seal-Install/Remove	035460

Item	Description	Part No.
*	Kit A.-Parts Tray SIMPL PMP (Consists of 056525 & 044118 Trays - see parts list, page No Tag)	X58447
*	Kit A.-Accessory PH61 Consists of: X44797 Agitator, X54704 Cap, 033107 Cap Restrictor, 041923 O-Ring 054916 Blade Agitator	X66408
*	Kit-Tune Up SIMPL Pump	X49463-63

*Not Shown

X44127 Brush A.—Package-HT-SS

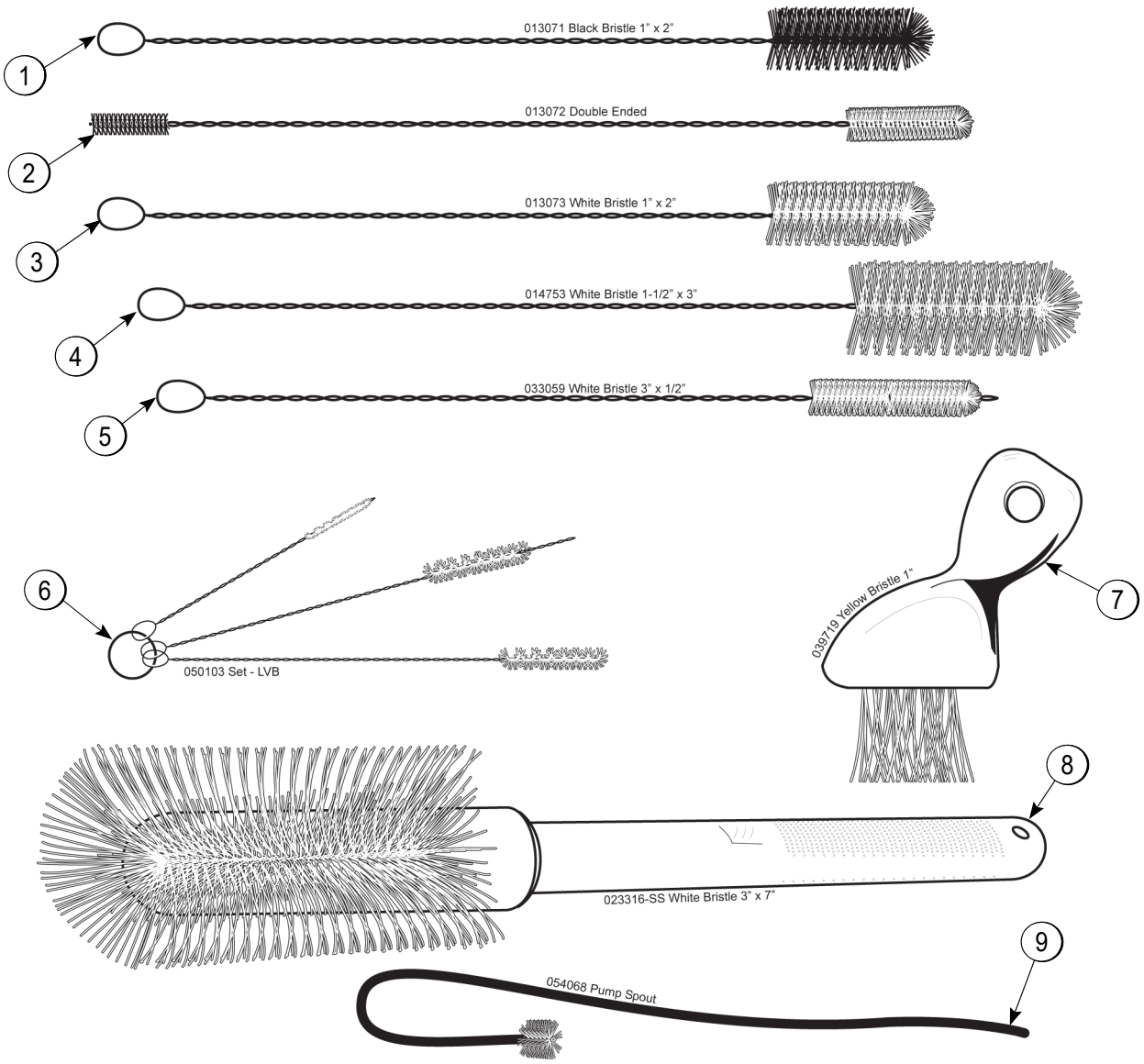

Figure 4-5

Item	Description	Part No.
1	Black Bristle Brush	013071
2	Double End Brush	013072
3	White Bristle Brush (1" x 2")	013073
4	White Bristle Brush (1-1/2" x 3")	014753
5	White Bristle Brush (1/2" x 3")	033059

Item	Description	Part No.
6	Brush Set (3)	050103
7	Yellow Bristle Brush	039719
8	White Bristle Brush (3" x 7")	023316-SS
9	Brush-Pump Spout	054068

Syrup Tank

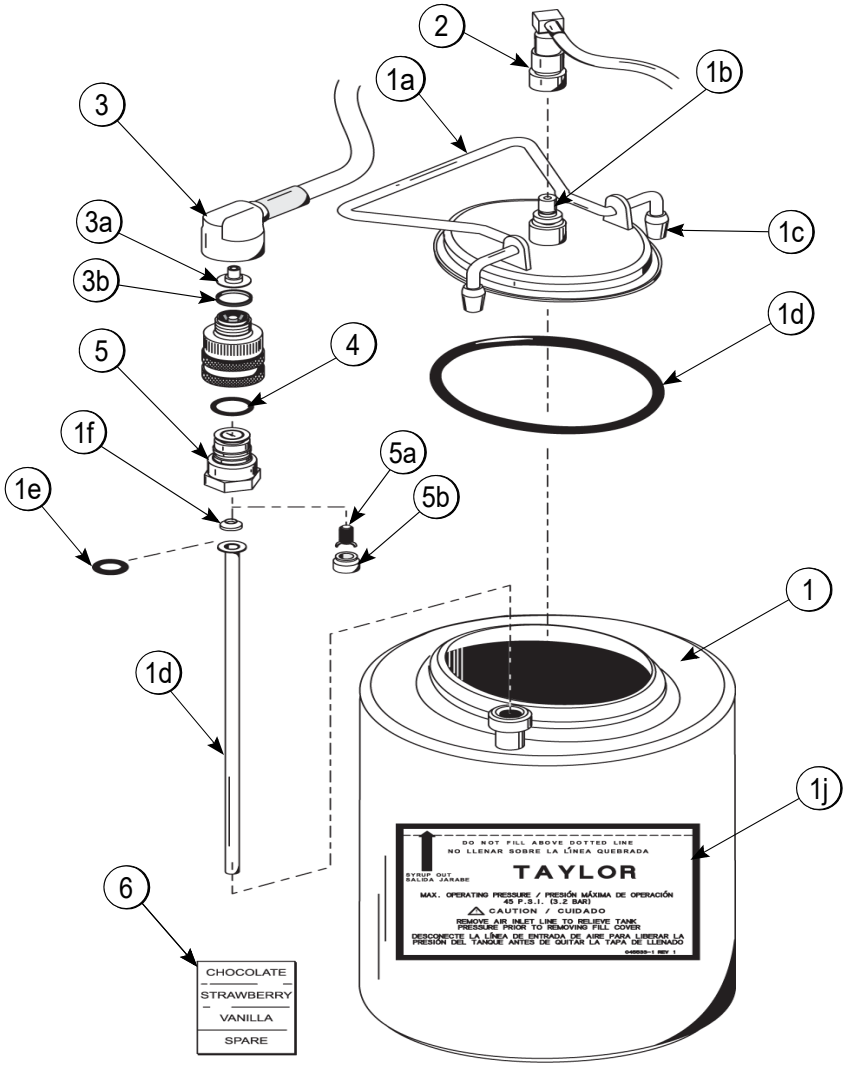

Figure 4-6

Item	Description	Part No.
1a -1j	Tank-Syrup 4 Qt.	X45533-SER
1a	Cover-Tank	035759-1
1b	Plug-Q.D. C02	021077
1c	Tip-Nylon Grey	024261
1d	O-ring-3.437 ID	016037
1e	Tube-Dip Syrup Tank	015441-7
1f	O-ring .291 ID	018550
1g	Washer-1/4 Flare	018595
1j	Decal-Syrup Tank	045533-1
2	Socket-QD C02	021524

Item	Description	Part No.
3	Socket-QD Liq. 90 Deg.	021026
**3a	Restrictor-Syrup	030917
3b	Gasket-Rubber	023551
4	O-ring-5/8 OD	016030
5	Plug-QD Liq.	021081
5a	Valve A.-QD Plug	021081-2
5b	Insert-QD Plug Valve	021081-1
6	Decal-Set of 4 Syrup Flav	021523

**Not used on chocolate.

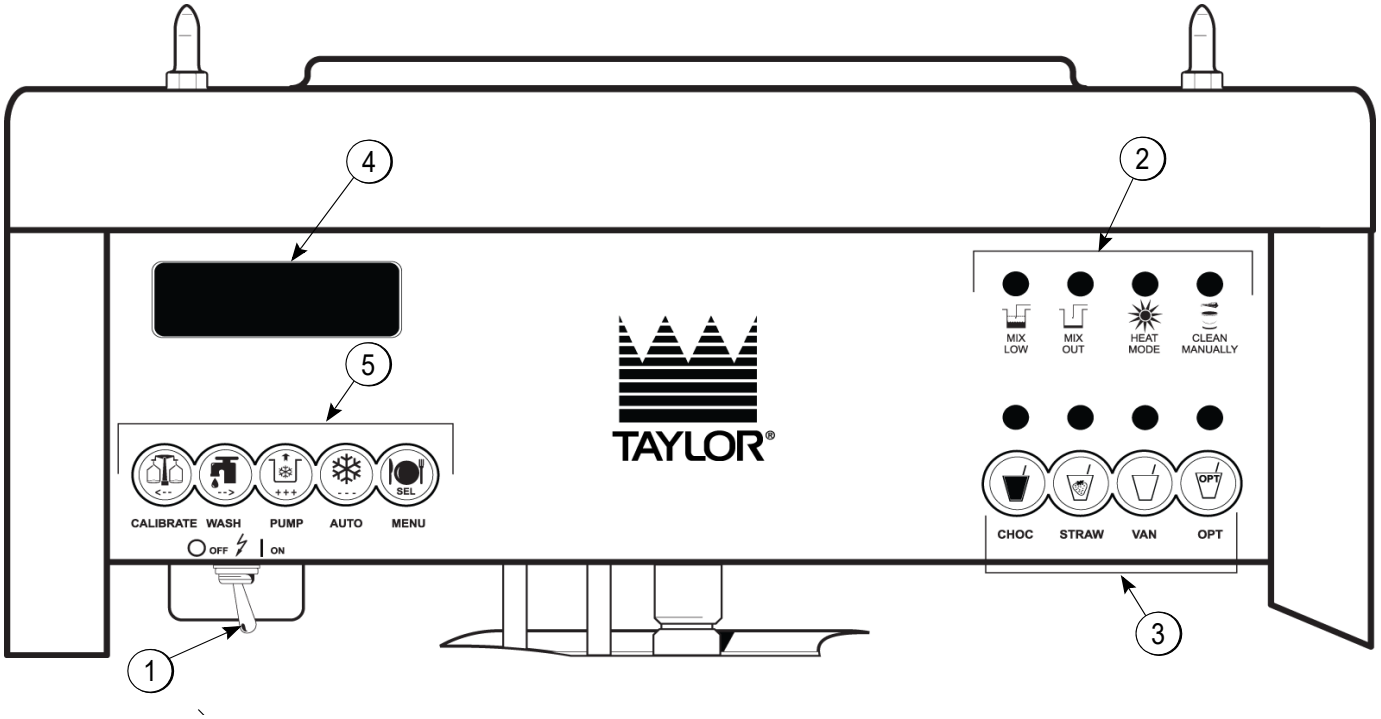

Figure 5-1

Item	Description
1	Power Switch
2	Indicator Lights
3	Flavor Selector Keypad
4	Liquid Crystal Display
5	Keypads

Symbol Definitions

To better communicate in the international arena, the words on many of our operator switches and buttons have symbols to indicate their functions. Your Taylor machine is designed with these international symbols.

The following chart identifies the symbol definitions used on the operator switches.

OFF

POWER

ON

CALIBRATE

WASH

PUMP

AUTO

MENU

MIX LOW

MIX OUT

HEAT MODE

CLEAN MANUALLY

CHOCOLATE

STRAWBERRY

VANILLA

OPTIONAL

Power Switch

The power switch is located under the control panel on the left side of the unit. When placed in the ON position, the power switch allows Softech™ panel operation.

Liquid Crystal Display

The liquid crystal display (LCD) is located on the front control panel. The LCD is used to show in what mode the freezer is operating and whether or not there is sufficient mix.

Indicator Lights

MIX LOW—When the MIX LOW light begins to flash, it indicates the mix hopper has a low supply of mix and should be refilled as soon as possible. The word LOW will also display on the LCD indicator next to the word MIX.

MIX OUT—When the MIX OUT light begins to flash, it indicates the mix hopper has been almost completely exhausted and has an insufficient supply of mix to operate the freezer. The word OUT will also display on the LCD indicator next to the word MIX. At this time, the Auto mode is locked out and the freezer will be placed in the Standby mode. To initiate the refrigeration system, add mix to the mix hopper and press the AUTO keypad. The freezer will automatically begin operation.

HEAT MODE—When the HEAT MODE light is flashing, it indicates that the freezer is in the process of a heat cycle.

CLEAN MANUALLY—When the CLEAN MANUALLY light is flashing, it indicates that the machine must be disassembled and brush-cleaned within 24 hours.

When all four indicator lights are flashing, this signifies a locked condition. Once a hard lock condition has been remedied, two lights will remain flashing until the mix low and mix out conditions have been satisfied. During a soft lock condition, all four lights will stop flashing once the machine has been placed in a heat cycle.

Reset Mechanism

The reset button is located in the right side panel. The reset mechanism protects the beater motor from an overload condition. Should an overload occur, the reset mechanism will trip. To properly reset the freezer, place the power switch in the OFF position. Press the reset button firmly. Turn the power switch to the ON position. Clear the fault. Press the WASH keypad and observe the freezer's performance. Open the side access panel to check if the beater motor is turning the driveshaft in a clockwise (from the operator end) direction without binding.



CAUTION! DO NOT use metal objects to press the reset button. Failure to follow this instruction may result in electrocution.

Operating Screen Descriptions

When the machine is powered, the system will initialize. The screen will display INITIALIZING. There are four types of data the system will check: LANGUAGE, SYSTEM DATA, CONFIG DATA, and LOCKOUT DATA. During the INITIALIZING... LANGUAGE screen, the alarm will be on. If the system data, configuration data, or lockout history data has become corrupt, the following screen will alert the operator that the system settings may have been changed.

NVRAM FAULT
RESET TO DEFAULTS
PRESS SEL KEY

Once the system has initialized, the SAFETY TIMEOUT screen is displayed, and the alarm is turned on.

SAFETY TIMEOUT
ANY KEY ABORTS

This screen will be displayed, with the alarm on, for 60 seconds or until any keypad is pressed.

After the safety timeout has been completed, and the power switch is in OFF position, one of the following screens is displayed.

The first screen is displayed if the machine is not in a brush-clean state. If any of the requirements for a brush-clean have not been met, the time displayed will remain at 5:00 minutes. When all the requirements for a brush-cleaning are met, and the 5 minutes expire, the screen will change to the second screen, which is the standard power switch OFF screen.

POWER SWITCH OFF
TIME: 4:40
HOPPER: 62.1
BARREL: 67.7

POWER SWITCH OFF
- = - = - = - = - = -
UNIT CLEANED

When the power switch is set in the ON position, the system mode of operation screen is displayed. In this example, the machine is On, but no mode of operation has been selected. The second line of the display indicates whether there is a sufficient supply of mix in the hopper or if there is a Low or Out mix condition. The third line of the display shows the temperature of the mix hopper. After pressing the AUTO keypad, the last line of the display shows the month and date (MM = month, DD = day) that the machine needs to be disassembled and brush-cleaned.

MODE: OFF

HOPPER TEMP: 35.5F
UNIT CLEANED

The next display indicates the freezer is operating in two different modes. The following information is given the machine is operating in the Wash and Pump modes, the temperature of the mix hopper is 40°F (4.4°C), and the machine needs to be brush-cleaned on October 31st.

MODE: WSH-PMP

HOPPER TEMP: 40.0 F
BRUSH CLEAN ON: 10/31

The following displays pertain to the heat treatment cycle:

While in the HEAT MODE, you will see this display. It shows the present temperature of the hopper.

MODE: HEAT
PHASE: HEAT
HOPPER TEMP: 140.0 F
BRUSH CLEAN ON: MM/DD

The mix temperature must be raised above 151°F (66.1°C) within 90 minutes or the freezer will be locked in Standby, and the cycle failure display will appear.

In the example above, the HOPPER TEMP is 140°F (60°C). The phase shows that the machine is in the HEAT phase of the heat treatment cycle.

When the HEAT phase is complete, the freezer goes into the HOLD phase of the cycle. The HOLD phase will hold the temperature above 151°F (66.1°C) for a minimum of 30 minutes.

In this following example, the HOPPER TEMP is 151°F (66.1°C).

MODE: HEAT
PHASE: HOLD
HOPPER TEMP: 151.0 F
BRUSH CLEAN ON: MM/DD

The final phase of the heat treatment cycle is the COOL phase. Now the freezer must cool the mix to below 41°F (5°C). If the product fails to cool in two hours, the freezer will lock out.

This example illustrates that the temperature is being lowered but has not yet reached the set point.

MODE: HEAT
PHASE: COOL
HOPPER TEMP: 55.0 F
BRUSH CLEAN ON: MM/DD

The entire heat treatment cycle must be completed in four hours.

When the entire heat treatment cycle has been completed, the normal display will appear, showing the machine in the STANDBY mode. The machine may now be placed in the AUTO mode or left in the STANDBY mode.

MODE: STANDBY

HOPPER TEMP: 41.0 F
BRUSH CLEAN ON: MM/DD

Hard Lock—There are two causes for a hard lock:

- Fourteen days have elapsed since the last brush-cleaning. The following screen will be displayed:

14 DAY TIMEOUT
CLEANING REQ'D
FREEZER LOCKED
PRESS SEL KEY

- There has been a thermistor failure (freezing cylinder, hopper, or glycol) during the heat treatment process.

SYSTEM FAULT
SERVICE REQ'D
FREEZER LOCKED
PRESS SEL KEY

All four LEDs on the front of the freezer will illuminate. Press the SEL keypad.

The next display is the screen that will appear after the failure message. To comply with health codes, heat treatment system freezers must complete a heat treatment cycle daily and must be brush cleaned every 14 days. Brush cleaning is the normal disassembly and cleaning procedure. Failure to follow these guidelines will cause the control to lock the freezer out of the Auto mode. Press the WASH keypad.

NO AUTO OPERATION
ALLOWED UNTIL
BRUSH CLEANING
PRESS WASH KEY

The next display is the screen that will appear after the BRUSH CLEANING message and illustrates that the control is in the OFF mode and the machine needs to be disassembled and brush-cleaned.

MODE: OFF

HOPPER TEMP: 45.0 F
FREEZER LOCKED

Soft Lock—If a heat treatment cycle has not been initiated within the last 24 hours, all four LEDs on the front of the machine will illuminate and a message will appear on the LCD. Line 3 of the LCD will indicate the reason the message appears. The following are the variable messages that will appear on line 3:

- POWER SWITCH OFF: The power switch was in the OFF position.
- MIX OUT PRESENT: There was a mix out condition present.
- AUTO OR STANDBY OFF: The machine was not in the Auto or Standby mode.
- NO HEAT CYCLE TRIED: A heat treatment cycle was not attempted in the last 24-hours. (AUTO HEAT TIME was advanced, or a power loss was experienced at the time the cycle was to occur, or there is a heat cycle failure not due to a thermistor failure.)

NO HEAT TREAT START
BECAUSE
VARIABLE MESSAGE
PRESS SEL KEY

If the following screen appears, a soft lock has occurred during the heat treatment cycle.

```
HEAT TREAT CYCLE
FAILURE
FREEZER LOCKED
PRESS SEL KEY
```

If the temperature of the product has not fallen below 41°F (5°C) by the end of the cool cycle, the following screen will appear.

```
PRODUCT OVER TEMP
FREEZER LOCKED
PRESS SEL KEY
```

Press the SEL keypad to advance to the next display.

When one of these messages appears, automatic freezer operation cannot take place until the freezer is disassembled and brush-cleaned or has completed a heat treatment cycle. The next display will instruct the operator to start a heat treatment cycle manually (by pressing the AUTO keypad), or to disassemble and brush-clean the freezer. If the AUTO keypad is pressed, the freezer will automatically start the heat treatment cycle and only the HEAT MODE LED will illuminate.

```
NO AUTO OPERATION
ALLOWED.  PRESS
AUTO FOR HEAT CYCLE
WASH TO BRUSH CLEAN
```

If the WASH keypad is pressed, the next display will appear and the freezer will have to be disassembled and brush-cleaned.

```
MODE: OFF

HOPPER TEMP: 41.0F
FREEZER LOCKED
```

Once the freezer is unlocked by starting a heat treatment cycle, only the HEAT MODE LED will light. If the freezer is unlocked by brush-cleaning, the MIX LOW and MIX OUT LEDs will light.

Operator Menu

The OPERATOR MENU is used to enter the operator function displays. To access the OPERATOR MENU, simply press the MENU key. The cursor will flash over the letter “A” indicating that this is screen A. To select a different screen, use the arrow keys and move the cursor to the desired screen selection and press the SEL key.

```
                OPERATOR MENU
                A B C D E F G H I J K
EXIT FROM MENU
<- - - - - ->                    SEL
```

Screen B—FAULT DESCRIPTION. The fault description will indicate if there is a fault with the machine and the side of the machine where the fault occurred. To clear the tone for any faults that have been corrected, press the left arrow key. To see if there is more than one fault per cylinder, press the SEL key. When the last fault is displayed, the control will return to the OPERATOR MENU. To return to the main screen, move the cursor to A and press the SEL key again. Listed below are the variable messages which can appear.

- NO FAULT FOUND: There was no fault found in the machine. Nothing will appear on the screen after this variable message appears.
- BEATER OVERLOAD: Press the reset button firmly. Clear the tone.
- HPCO COMPRESSOR: Place the power switch in the OFF position. Wait 5-minutes for the machine to cool. Place the power switch in the ON position. Clear the tone.
- COMP ON TOO LONG: Place the power switch in the OFF position. Call a service technician. Clear the tone.
- HOPPER THERM BAD: Place the power switch in the OFF position. Call a service technician.
- BARREL THERM BAD: Place the power switch in the OFF position. Call a service technician.
- GLYCOL THERM BAD: Place the power switch in the OFF position. Call a service technician.

- HOPPER OVER TEMP: The hopper temperature has risen too high as follows. Clear the tone.
  a. The hopper temperature reaches 41°F (5°C) or higher after a power failure.
  b. The hopper temperature has not fallen below 41°F (5°C) by the end of the Cool phase in the heat treatment cycle.
- **BARREL OVER TEMP**—The barrel temperature has risen too high as follows. Clear the tone.
  a. The barrel temperature reaches 41°F (5°C) or higher after a power failure.
  b. The barrel temperature has not fallen below 41°F (5°C) by the end of the Cool phase in the heat treatment cycle.
- **POWER FAILURE**—This message will appear in the FAULT DESCRIPTION if a power failure has occurred. Clear the tone.

```
FAULT DESCRIPTION
VARIABLE MESSAGE

CLR                                SEL
```


Screen C—SET CLOCK. This screen will display the current date and time. The date and time may only be changed after the machine has been manually brush-cleaned but before it has been placed in the Auto mode. Move the cursor under the number you wish to change. Press the +++ key to increase the number or the - - - key to decrease the number.

```
SET CLOCK
10:21 AM   11/07/2014
- -
<- - - - - ->  +++          - - -      SEL
```

If an invalid date is entered, a second screen will appear. When the SEL key is pressed, the previous LCD screen will appear to allow for correction of the entry. The controller will not advance to the Daylight Saving Time screen until a valid date is entered.

```
SET CLOCK
10:34 AM   02/30/2014
- -                    INVALID DATE
<- - - - - ->  +++          - - -      SEL
```

When a valid date is entered and SEL is pressed, the DAYLIGHT SAVING TIME screen will display:

```
DAYLIGHT SAVING TIME
ENABLE    DISABLE
- - - - - - -
<- - - - - ->                          SEL
```

Pressing the arrow keys moves the cursor. Pressing the SEL key while under DISABLE accepts the selection and returns to the OPERATOR MENU.

Pressing the SEL key while under ENABLE accepts the selection and displays the following screen.

```
MAR          SECOND          SUNDAY
NOV          FIRST           SUNDAY
YES          NO                EXIT
                                _ _ _
```

To change the default date, move the cursor to NO and press the SEL key. The following screen will display:

```
              DST START MONTH

            J F M A M J J A S O N D
  MAR
<- - - - - ->                          SEL
```

Use the arrow keys to select the desired month and press the SEL key. The following screen will display:

```
              DST START WEEK

                  1 2 3 4 L
 SECOND SUNDAY
<- - - - - ->                          SEL
```

Use the arrow keys to select the desired month and press the SEL key. The following screen will display:

```
DST END MONTH

J F M A M J J A S O N D
  NOV
<- - - - - ->                    SEL
```

Use the arrow keys to select the desired week and press the SEL key. The following screen will display:

```
DST END WEEK

1 2 3 4 L
 FIRST SUNDAY
<- - - - - ->                    SEL
```

Use the arrow keys to select the desired week and press the SEL key. The screen will return to the OPERATOR MENU.

Screen D—SYSTEM INFORMATION. The first screen indicates the software version used in the machine.

```
SOFTWARE VERSION
PH61 CONTROL UVC2
VERSION XXX
                                 SEL
```

Pressing the SEL key twice will display the Language screen.

```
Language
V1.14roo          English 539

                                 SEL
```

Pressing the SEL key a third time displays the bill of material number and serial number for the machine. Pressing the SEL key from this screen returns the display to the OPERATOR MENU.

```
B.O.M.            PH6158FAGS
S/N               K0000000

                                 SEL
```

Screen E—AUTO HEAT TIME. This screen is used to set the time of day in which the machine will automatically enter the heat treatment cycle. Pressing the arrow keys moves the cursor, pressing the plus or minus keys changes the selected digits, and pressing the SEL key accepts the settings and returns to the OPERATOR MENU.

```
AUTO HEAT TIME
TIME:  12:00 AM
              - -
<- - - - - ->  +++          - - -      SEL
```

Screen F—CURRENT CONDITIONS and SERVINGS COUNTER. The first screen displays the current viscosity of the product and the hopper and barrel temperatures. The last line of the display is the compressor countdown safety timer. The safety timer prevents the compressor from running more than 11 minutes (other than during the cooling phase of the heat treatment cycle).

```
VISC          HOPPER          BARREL
  3800          38.5            28.5

TIME C        11:00           11:00
```

Press the SEL key once to view the SERVINGS COUNTER screen. This screen indicates the number of times the draw switch has closed (number of draws) since the last brush-cleaning or since the last serving counter reset. Pressing the SEL key returns the screen to the OPERATOR MENU.

```
SERVINGS COUNTER
DRAWS
12
                                 SEL
```

Note: *Draws are counted during the Auto mode of operation only.*

Screen G—HEAT CYCLE DATA. The information from the previous heat treatment cycles can be obtained through this screen. The most recent heat treatment cycle data will be shown first. Press the plus key to scroll through the remaining heat cycle displays. If a heat treatment cycle failure should occur, a 2 character message will appear on the second line of the screen. Press the SEL key to return to the OPERATOR MENU.

Listed below are the variable messages which could appear:

HT	Heat time too long
CL	Cool time too long
TT	Failure in meeting total heat treatment cycle time requirement
TH	Failed thermistor probe
ML	Mix low condition
MO	Mix out condition
BO	Beater overload
HO	High pressure cut-out
PF	Power failure

Note: *If a power failure occurs but the heat treatment cycle does not fail, an asterisk (*) will appear on the third line of the display.*

OP	Operator interruption
PS	Power switch in the OFF position
RC	Heat cycle record cleared


```
00/00          00:00          00:00
HEAT           OVER           COOL     XX
01:09          00:45          01:14
TEMP AT END                   38.5      1
```

Pressing the left arrow key on any HEAT cycle data screen will cause the extended data screen to be displayed. This screen shows the hopper, barrel, and glycol temperatures and the amount of time the machine spent in the phases of the heat cycle when the heat cycle was completed or terminated.

```
HOPPER         BARREL         GLYCOL
151.0          134.5          178.0

PHASE TIME: 1:20                  1
```

Pressing the SEL key returns the display to the OPERATOR MENU.

Screen H—LOCKOUT HISTORY. This screen displays a history of the last 40 hard locks, soft locks, and brush-clean dates. Page numbers are indicated in the upper right corner. Page 1 contains the most recent failure. Press the plus key to cycle through the pages.

The second line of the screen displays the date and time a failure occurred. The third line indicates the reason for a failure or will indicate that a successful brush-cleaning has occurred. Some failures occur for multiple reasons. When this occurs, a page will be generated for each reason. Press the SEL key to return to the OPERATOR MENU.

```
LOCKOUT HISTORY                   1
11/21/14       02:08
SOFTLOCK ABORT
               +++          - - -    SEL
```

Screen I—AUTO START TIME. This screen allows the operator to enable or disable AUTO START TIME. If enabled, the operator sets the time at which the machine will automatically enter Auto from Standby. The machine will only enter Auto under the following conditions: if the programmed Auto Start Time has been reached, if the machine is in Standby, if no soft lock or hard lock conditions exist, or if the Auto Start Time feature has been enabled.

Use the arrow keys to move the cursor left or right. Use the plus and minus keys to change the time setting. Press the SEL key to save the selection and return to the OPERATOR MENU.

Screen J—SERVICE MENU. This screen can only be accessed by a service technician.

Screen K—STANDBY MODE. This option allows the operator to manually place the machine into Standby mode. Pressing the SEL key with the cursor under YES places the machine in Standby mode and returns to the OPERATOR MENU.

```
STANDBY MODE
STANDBY        YES      NO
                        - - -
<- - - - - ->                SEL
```

Equipment Setup

Evaluate the condition of lights and screen messages (HARD LOCK or SOFT LOCK, etc.) before performing opening procedures. If all four LEDs on the front of the machine are lit, the machine is locked. (See Figure 6-1.)

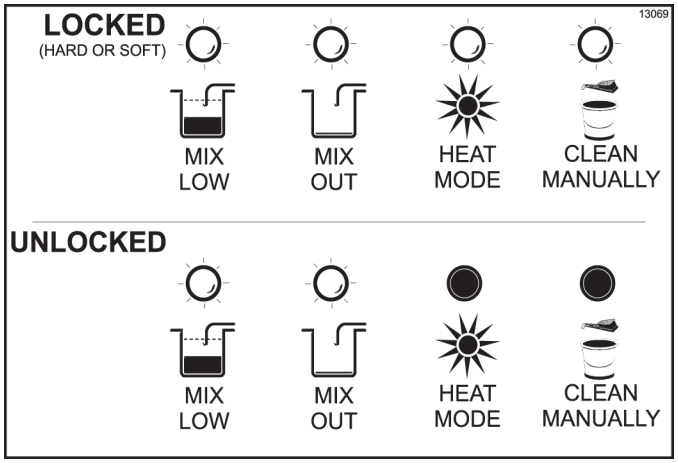

Figure 6-1

We begin our instructions at the point when we enter the store in the morning and find the parts disassembled and laid out to air-dry from the previous night's cleaning.

These opening procedures will show you how to assemble these parts into the freezer, sanitize them, and prime the freezer with **fresh** mix in preparation to serve your first portion.

If you are disassembling the machine for the first time or need information to get to the starting point in our instructions, turn to “Closing Procedures” page 6-17, and start there.

Freezing Cylinder Assembly

WARNING! Make sure the power switch is in the OFF position. Failure to follow this instruction may result in severe personal injury from hazardous moving parts.

1. Before installing the shake beater driveshaft, lubricate the groove on the beater driveshaft. Slide the beater driveshaft boot seal over the small end of the beater driveshaft and engage into the groove on the shaft. Heavily lubricate the inside portion of the boot seal and also lubricate the flat end of the boot seal that comes in contact with the rear shell bearing. Apply an even coat of lubricant to the shaft. **Do not** lubricate the square end. (See Figure 6-2.)

Note: *When lubricating parts, use an approved food grade lubricant (example: Taylor Lube HP).*

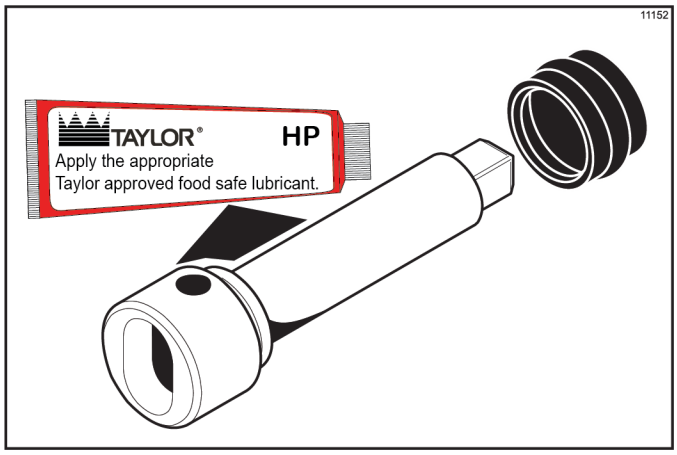

Figure 6-2

Note: *To ensure that the mix does not leak out of the back of the freezing cylinder, the middle section of the boot seal should be convex or extend out from the seal. If the middle section of the boot seal is concave or extending into the middle of the seal, turn the seal inside out. (See Figure 6-3.)*

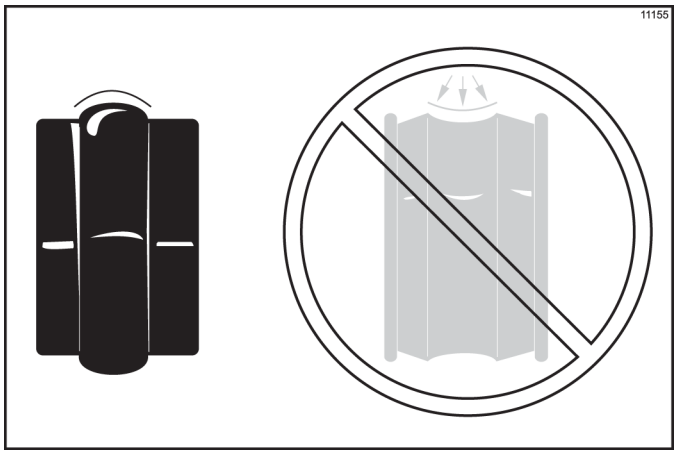

Figure 6-3

2. Install the beater driveshaft through the rear shell bearing in the freezing cylinder and engage the square end firmly into the driveshaft coupling. Be sure the driveshaft fits into the drive coupling without binding. (See Figure 6-4.)

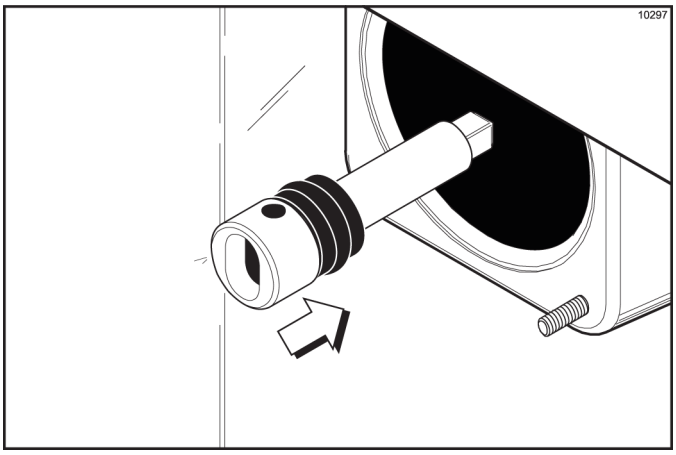

Figure 6-4

3. Check scraper blades for any nicks or signs of wear. If any nicks are present, replace the blades.

Note: *Scraper blades should be replaced every 6 months.*

4. If blades are in good condition, place each scraper blade over the holding pins on the beater assembly. (See Figure 6-5.)

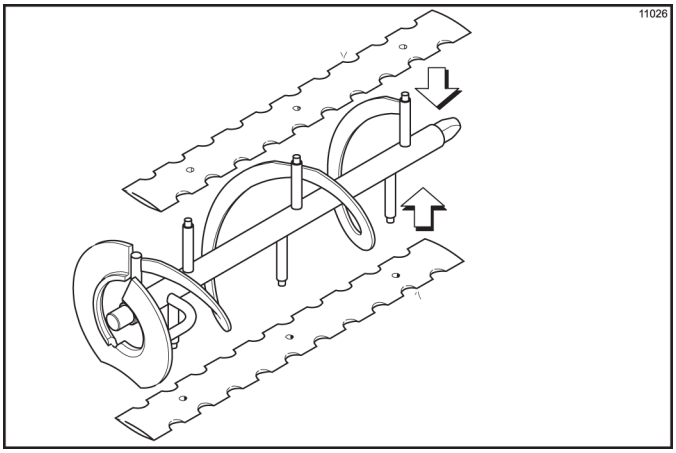

Figure 6-5

Note: *The holes in the scraper blade must fit over the pins to prevent damage.*

5. Hold the blades on the beater assembly. Insert the back of the beater assembly into the freezing cylinder and connect the drive hole with the driveshaft. (See Figure 6-6.)

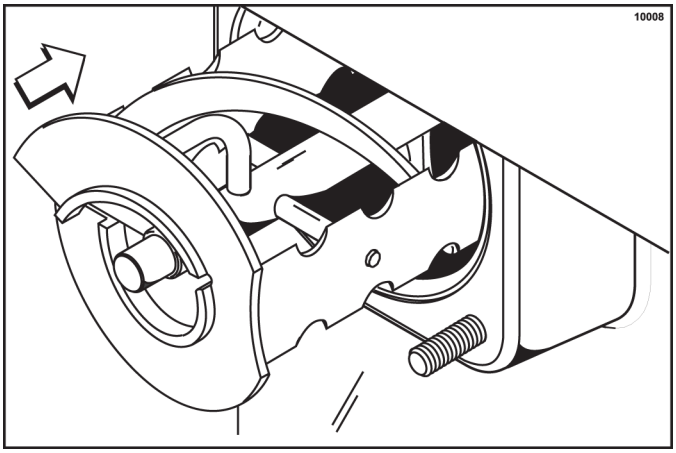

Figure 6-6

Note: *When properly seated, the beater will not protrude beyond the front of the freezing cylinder.*

6. Place the freezer door O-ring into the groove on the back of the freezer door. **Do not** lubricate the O-ring. Lubricate the outside diameter of the front bearing. Slide the front bearing into the door hub. (See Figure 6-7.)

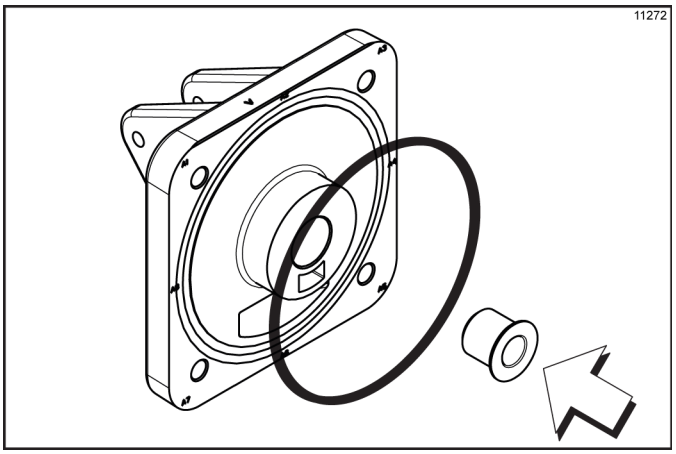

Figure 6-7

7. Position the freezer door on the four studs on the front of the freezing cylinder. Install the handscrews. Tighten equally in a crisscross pattern to ensure the door is secured. **Do not** overtighten. (See Figure 6-8.)

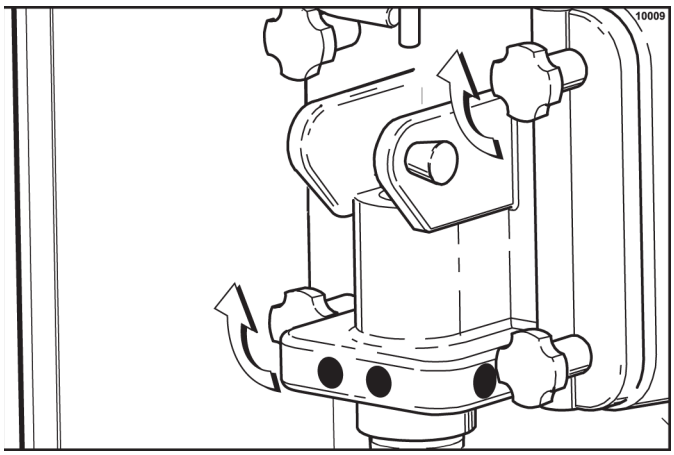

Figure 6-8

8. Assemble the draw valve spinner assembly. Inspect draw valve O-rings for cuts or nicks. (Replace if cut or nicked.) If draw valve O-rings are in good condition, slide the two O-rings into the grooves of the draw valve and lubricate. (See Figure 6-9.)

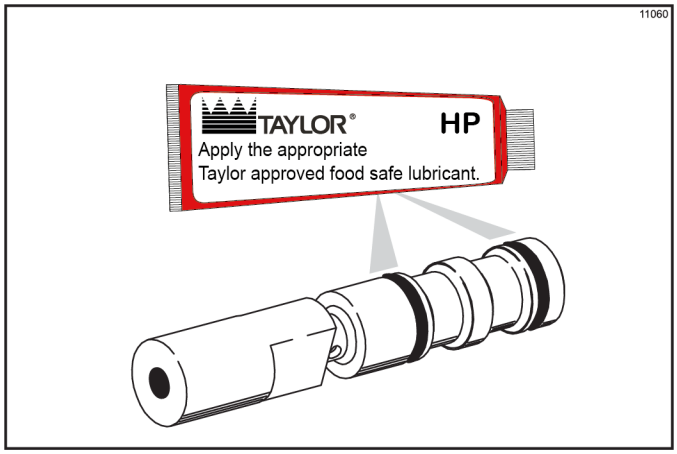

Figure 6-9

9. Lubricate the outer diameter of the spinner shaft seal. Fill the cups on each end of the seal with lubricant. Insert the spinner shaft seal into the bottom of the draw valve as far as it will go. The spinner shaft seal should fit into the seal groove located inside the draw valve cavity.

Important! *Inspect to see that the spinner shaft seal is correctly installed in the groove. A worn, missing, or improperly installed spinner shaft seal will cause product leakage out the top of the draw valve. (See Figure 6-10.)*

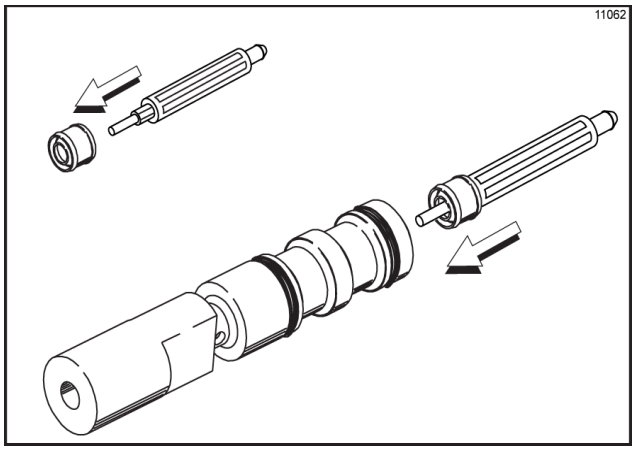

Figure 6-10

10. Lubricate the smaller end of the driven spinner. (See Figure 6-11.)

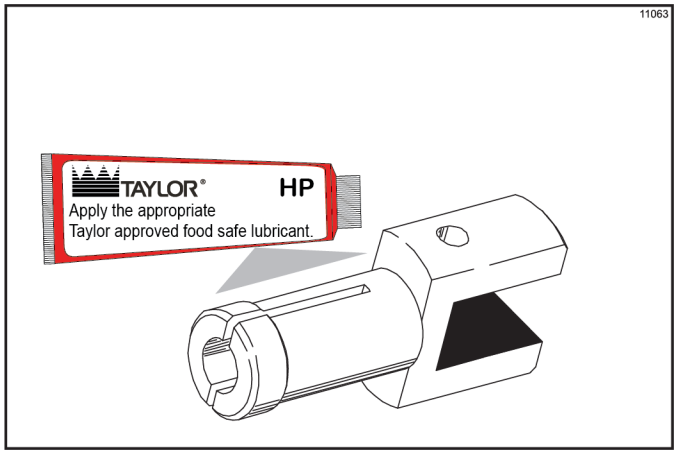

Figure 6-11

11. Squeezing the split ends together, insert the driven spinner through the metal opening of the draw valve until it snaps into place. (See Figure 6-12.)

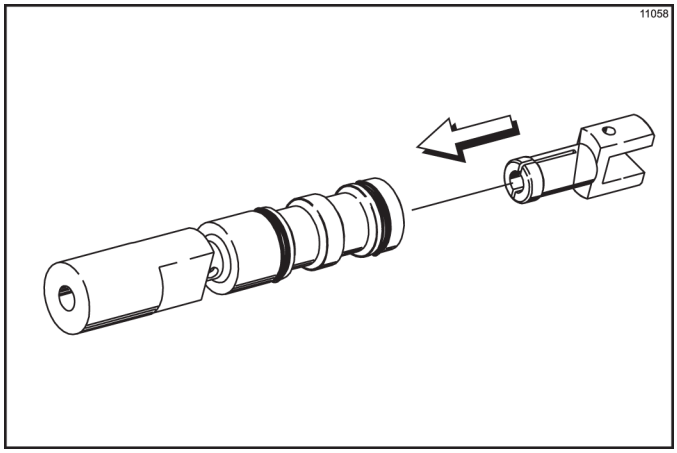

Figure 6-12

12. Lubricate the inside of the freezer door spout, top and bottom. (See Figure 6-13.)

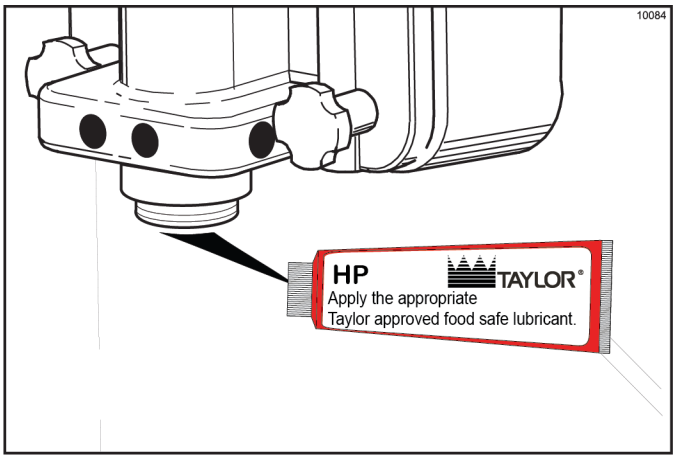

Figure 6-13

13. Insert the draw valve spinner assembly from the bottom until the slot in the draw valve which accepts the draw handle comes into view. (See Figure 6-14.)

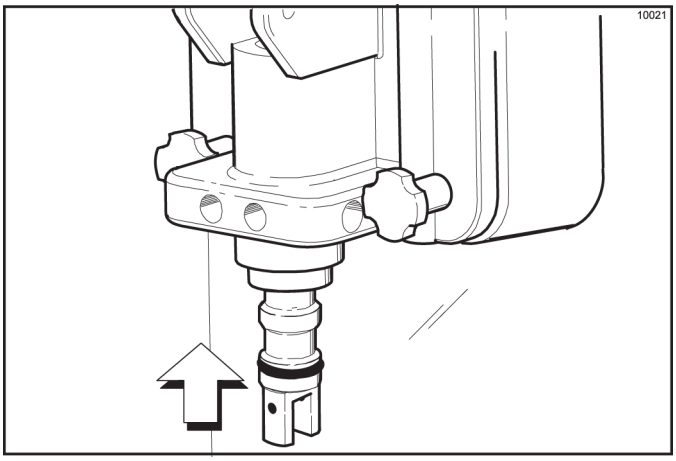

Figure 6-14

14. Install and lubricate the pivot pin O-ring. (See Figure 6-15.)

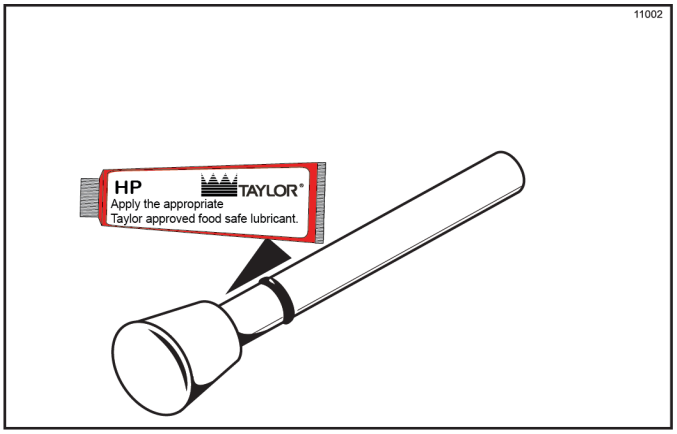

Figure 6-15

15. With the stopping tab of the draw handle facing down, slide the fork of the draw handle into the slot of the draw valve. Secure the draw handle with the pivot pin. (See Figure 6-16.)

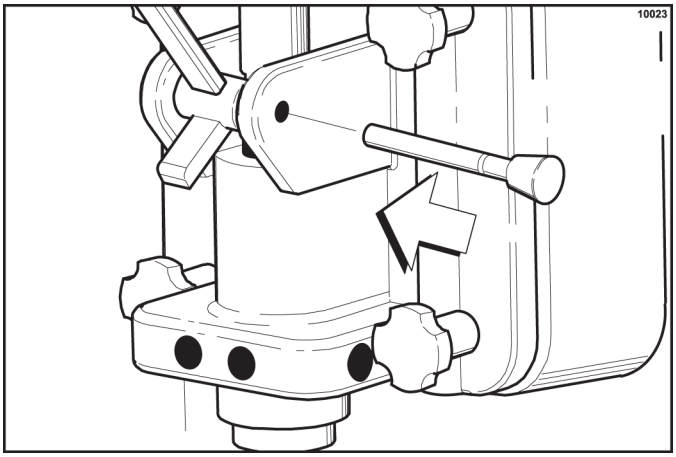

Figure 6-16

16. Lubricate the shaft of the spinner blade up to the groove. (See Figure 6-17.)

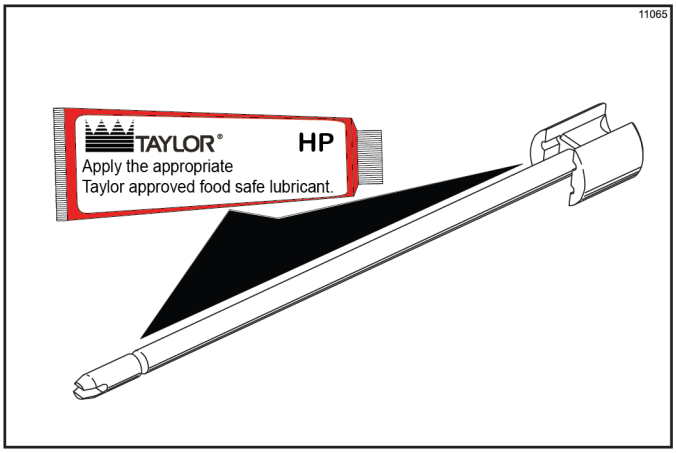

Figure 6-17

17. Insert the spinner blade shaft from the bottom, into the center of the driven spinner, and up through the draw valve cavity until the shaft appears at the top of the draw valve. The spinner blade must be aligned and engaged to the driven spinner at the bottom. This allows the spinner shaft to raise high enough to be engaged into the spinner coupling at the top. (See Figure 6-18.)

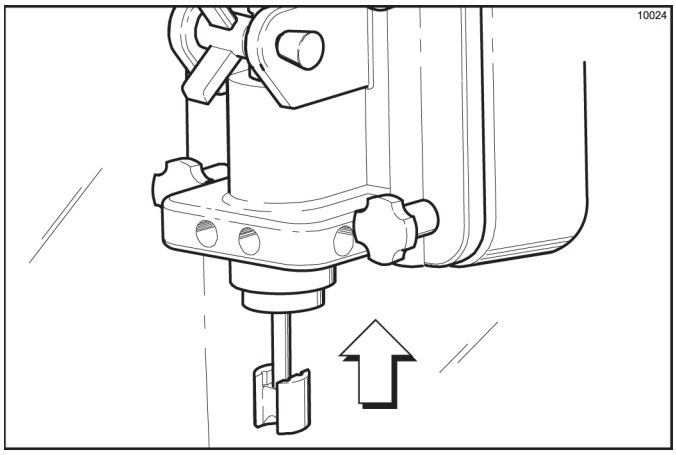

Figure 6-18

18. Raise the locking collar of the spinner coupling and insert the spinner shaft into the cavity of the coupling until the locking collar can drop into the locked position. (See Figure 6-19.)

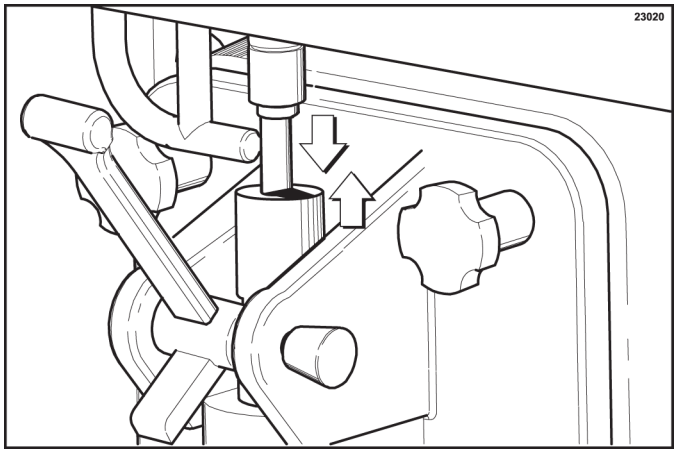

Figure 6-19

19. Snap the restrictor cap over the end of the door spout. (See Figure 6-20.)

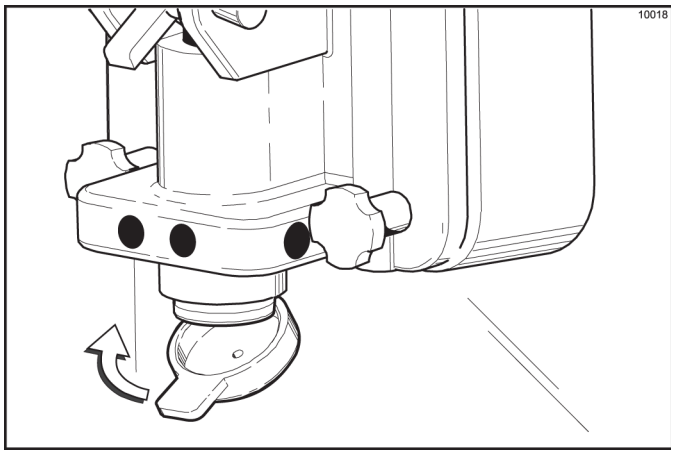

Figure 6-20

20. Slide the long drip pan into the hole in the front panel.
21. Slide the short drip pan into the hole in the rear panel.
22. Install the front drip tray and splash shield under the door spout. (See Figure 6-21.)

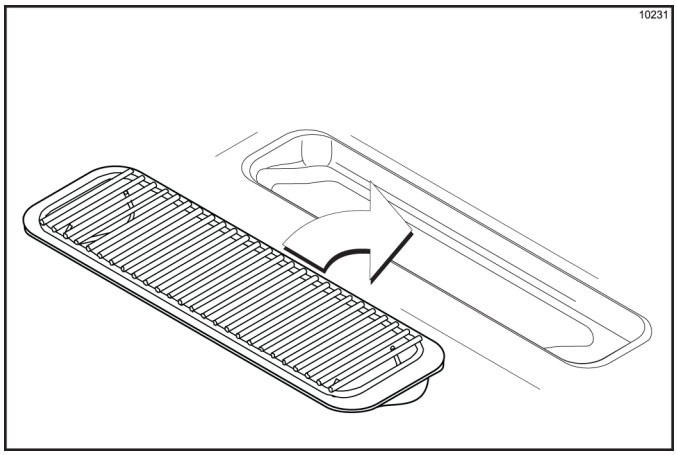

Figure 6-21

Mix Hopper Assembly

1. Inspect the rubber pump parts. O-rings and gasket must be in 100% good condition for the pump and entire machine to operate properly. The O-rings and gasket cannot properly serve their intended function if nicks, cuts, or holes in the material are present. Discard and replace any defective parts immediately.
2. Assemble the piston. Slide the red O-ring into the groove of the piston. **Do not** lubricate the O-ring. (See Figure 6-22.)

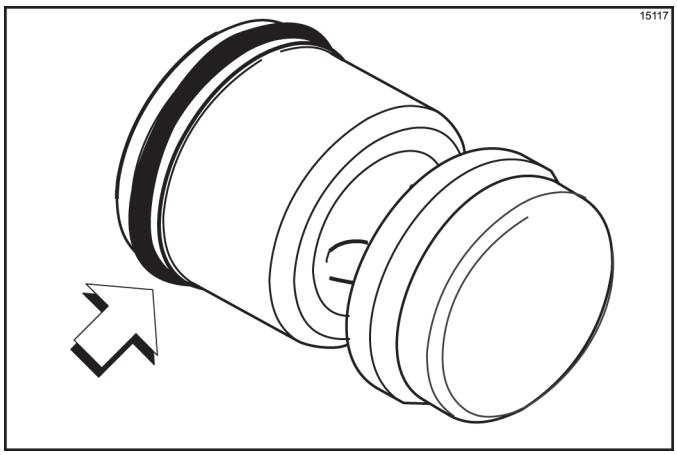

Figure 6-22

3. Apply a thin layer of lubricant to the inside of the pump cylinder at the retaining pin hole end. (See Figure 6-23.)

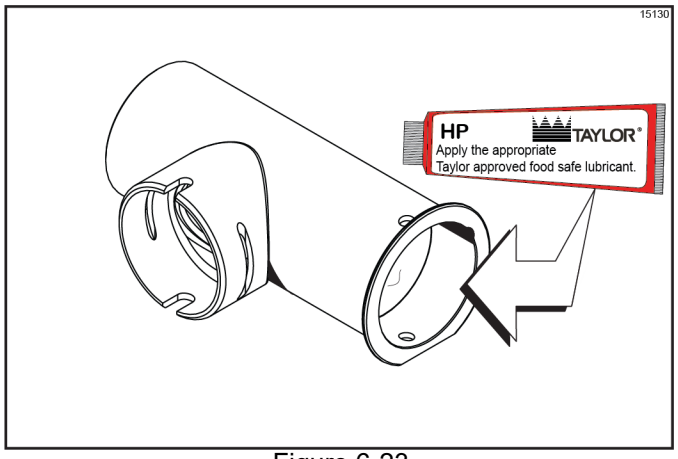

Figure 6-23

4. Insert the piston into the retaining pin hole end of the pump cylinder. (See Figure 6-24.)

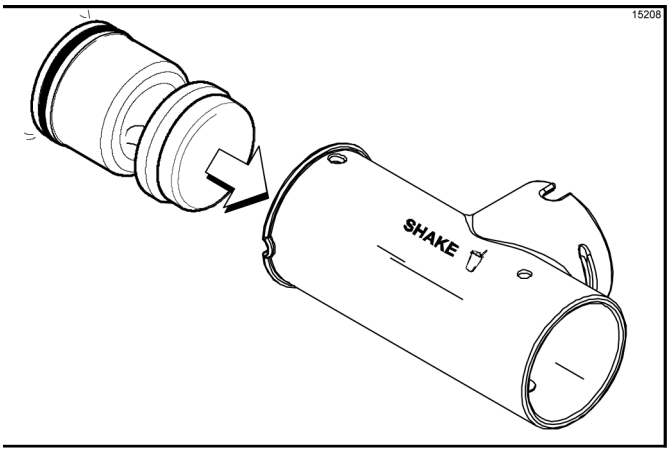

Figure 6-24

5. Assemble the valve cap. Slide the red O-ring into the groove of the valve cap. **Do not** lubricate the O-ring. (See Figure 6-25.)

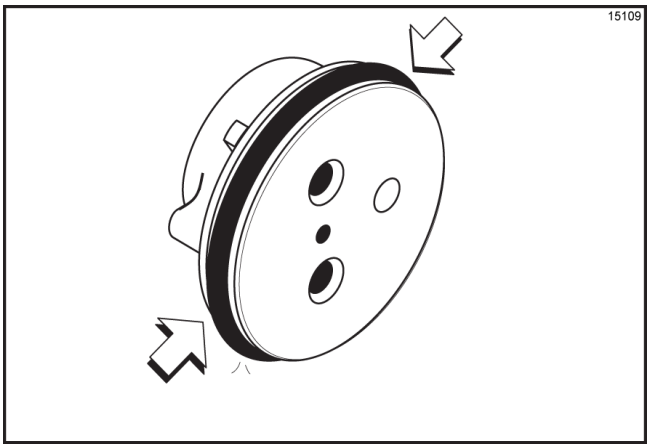

Figure 6-25

6. Slide the pump valve gasket into the holes on the cap. **Do not** lubricate the gasket. (See Figure 6-26.)

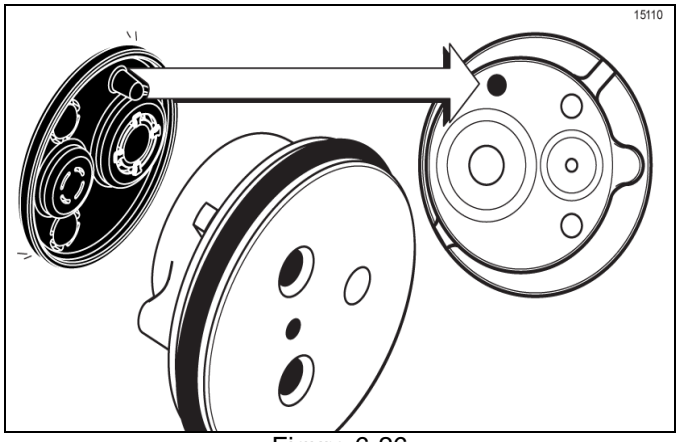

Figure 6-26

7. Insert the valve cap into the hole in the mix inlet adapter. (See Figure 6-27.)

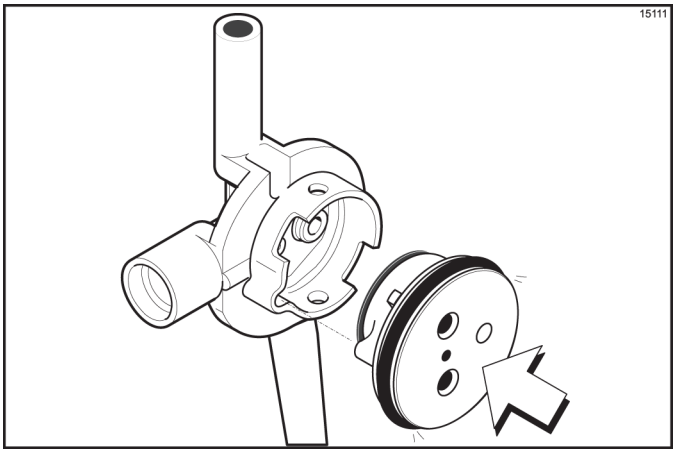

Figure 6-27

8. Insert the mix inlet assembly into the pump cylinder. (See Figure 6-28.)

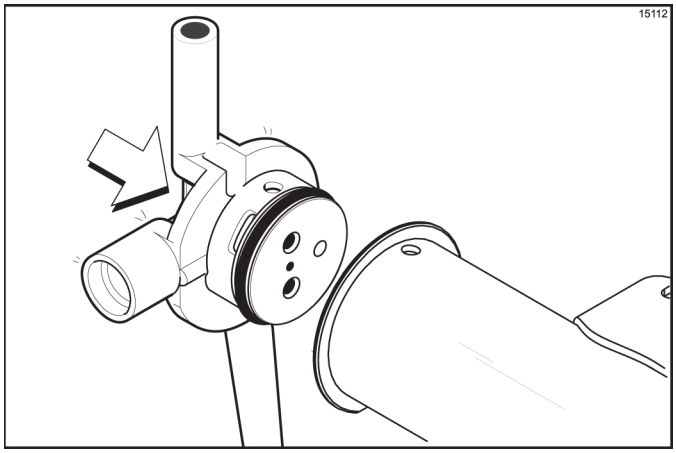

Figure 6-28

Note: *The adapter must be positioned into the notch located at the end of the pump cylinder.*

9. Secure the pump parts in position by sliding the retaining pin through the cross holes located at one end of the pump cylinder. (See Figure 6-29.)

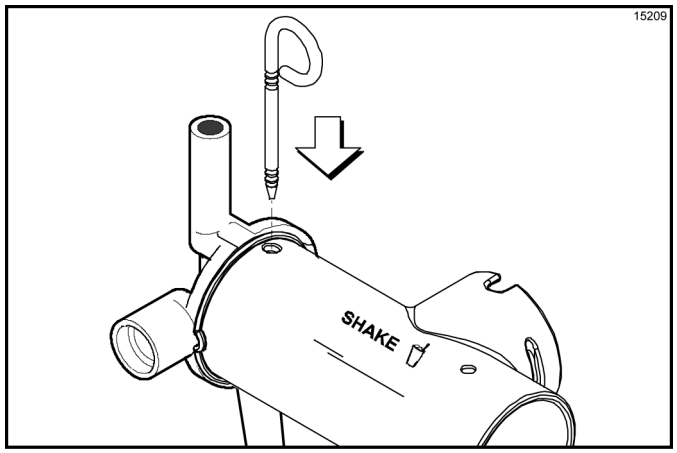

Figure 6-29

Note: *The head of the retaining pin should be located at the top of the pump when installed.*

10. Assemble the feed tube assembly. Slide the check ring into the groove of the feed tube. (See Figure 6-30.)

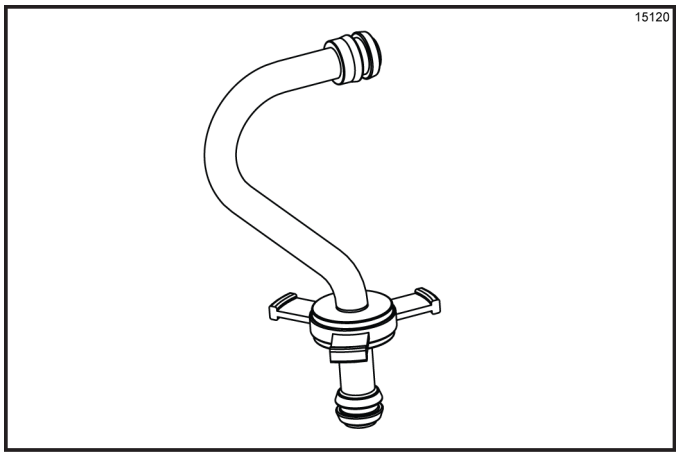

Figure 6-30

11. Install one red O-ring on each end of the mix feed tube, and thoroughly lubricate. (See Figure 6-31.)

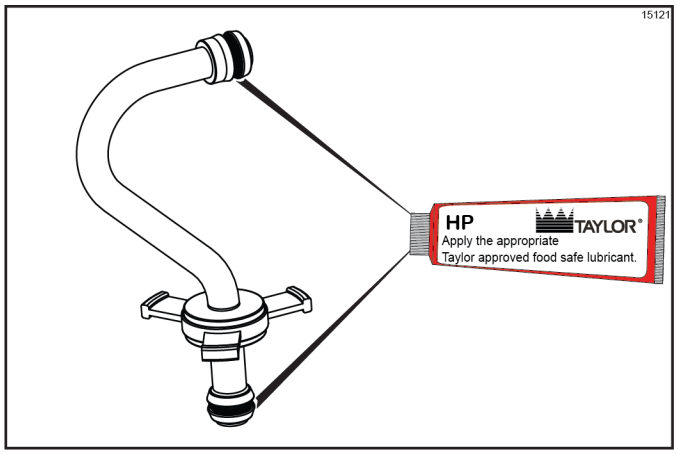

Figure 6-31

12. Lay the pump assembly, pump clip, feed tube, cotter pin, and agitator in the bottom of the mix hopper for sanitizing. (See Figure 6-32.)

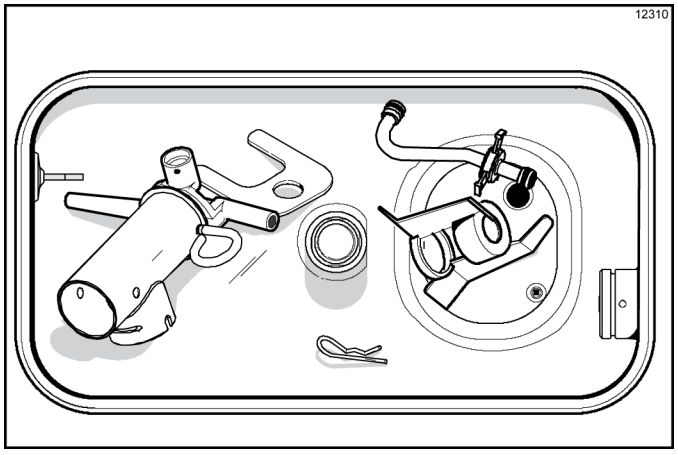

Figure 6-32

13. Slide the large black O-ring and the two smaller black O-rings into the grooves on the driveshaft. Thoroughly lubricate the O-rings and shaft. **Do not** lubricate the hex end of the shaft. (See Figure 6-33.)

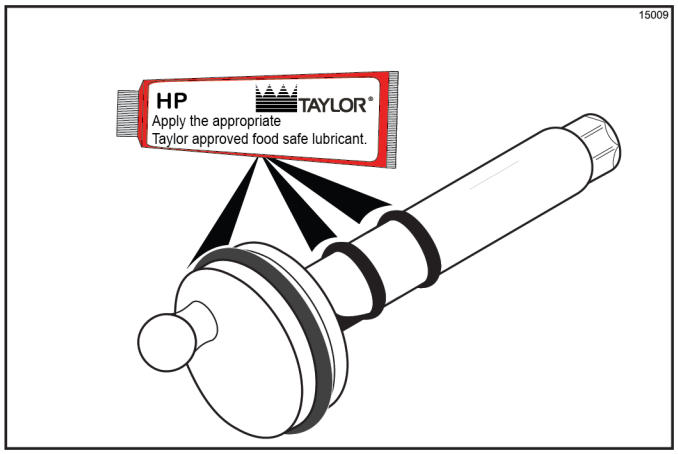

Figure 6-33

14. Install the hex end of the drive shaft into the drive hub at the rear wall of the mix hopper. (See Figure 6-34.)

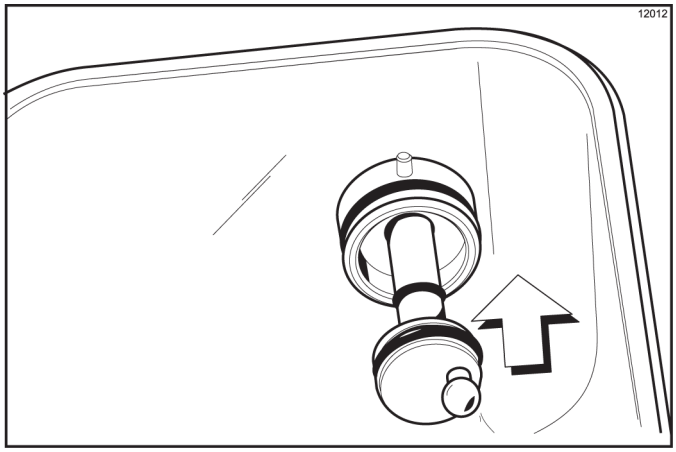

Figure 6-34

Note: *For ease in installing the pump, position the ball crank of the driveshaft in the 3 o'clock position.*

Sanitizing

1. Prepare 2.5 gal (9.5 L) of an approved 100 ppm sanitizing solution (example Kay-5®). Use warm water and follow the manufacturer's specifications.
2. Pour the sanitizing solution over all parts in the bottom of the mix hopper and allow it to flow into the freezing cylinder.

Note: *You have just sanitized the mix hopper and parts; therefore, make sure your hands are clean and sanitized before going on in these instructions.*

3. Using the white-hopper brush, clean the mix-level sensing probes, mix hopper, mix inlet hole, outside of the agitator driveshaft housing, agitator, air/mix pump, pump clip, mix feed tube, and cotter pin.
4. Prepare another 2.5 gal (9.5 L) of an approved 100 ppm sanitizing solution (example Kay-5®). Use warm water and follow the manufacturer's specifications.
5. Install the air/mix pump assembly at the rear of the mix hopper. To position the pump on the drive hub, align the drive slot in the piston with the drive crank of the driveshaft. Secure the pump in place by slipping the pump clip over the collar of the pump, making sure the clip fits into the grooves in the collar. (See Figure 6-35.)

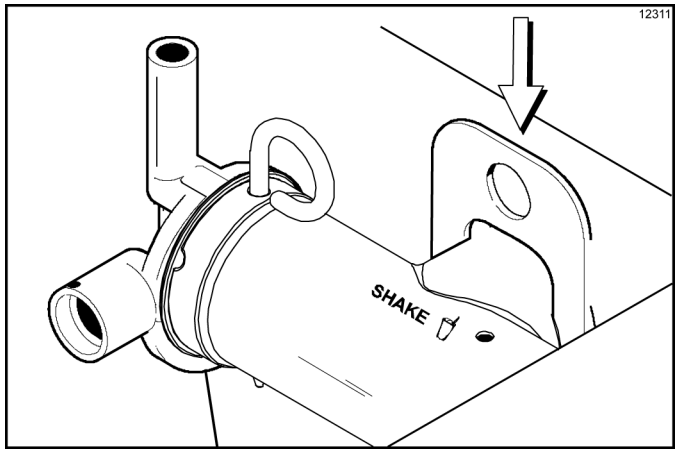

Figure 6-35

CAUTION! Always Install the pump end of the mix feed tube and secure with the cotter pin. Failure to follow this instruction could result in sanitizer spraying on the operator.

6. Pour the sanitizing solution into the mix hopper. The sanitizing solution should be within 1 in. (25 mm) of the top of the hopper.
7. Using the white-hopper brush, scrub the exposed sides of the hopper.
8. Place the power switch to the ON position.
9. Press the WASH key. This will cause the sanitizing solution in the freezing cylinder to come in contact with all areas of the freezing cylinder. Allow the sanitizing solution to agitate for 5 minutes. (See Figure 6-36.)

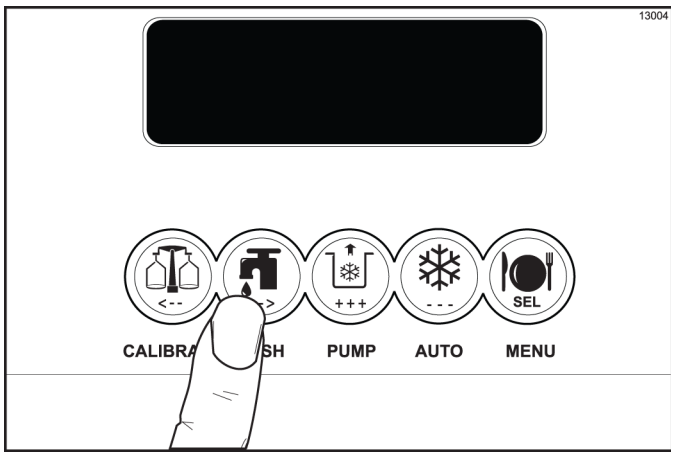

Figure 6-36

10. With a pail beneath the door spout, open and close the draw valve six times.
11. Press the PUMP key to sanitize the inside of the air/mix pump.
12. Open the draw valve and draw off all the remaining sanitizing solution.
13. Press the WASH and PUMP keys to stop the Wash and Pump modes. Close the draw valve. (See Figure 6-37.)

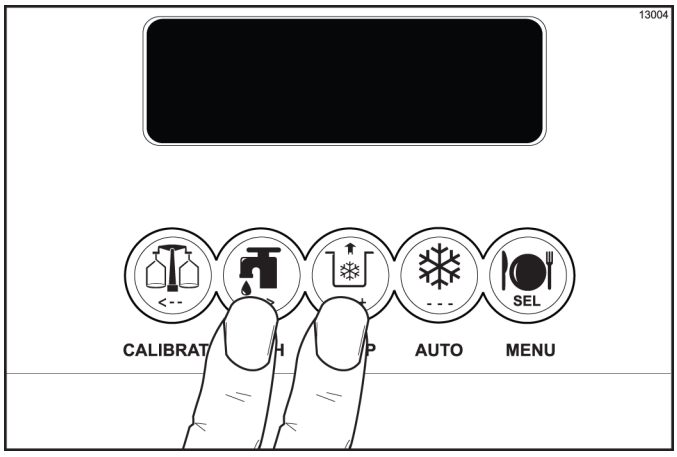

Figure 6-37

Note: *Make sure your hands are clean and sanitized before going on in these instructions.*

14. Place the agitator on the agitator driveshaft housing. (See Figure 6-38.)

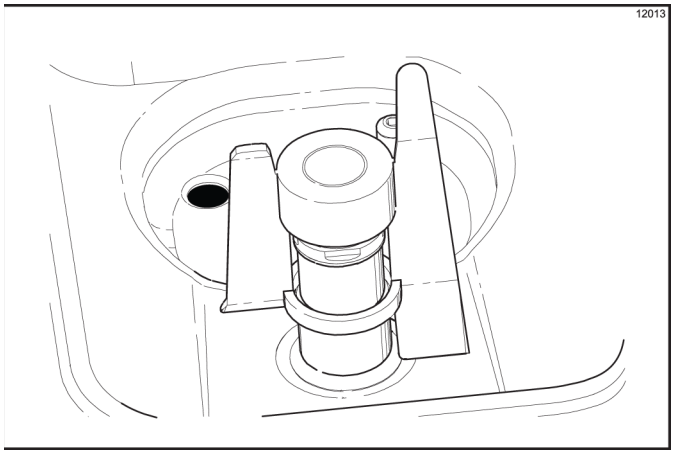

Figure 6-38

Note: *If the agitator paddle stops turning during normal operation, with* ***sanitized hands****, remove the agitator from the agitator driveshaft housing and brush-clean with sanitizing solution. Install the agitator back onto the agitator driveshaft housing.*

15. Remove the restrictor cap.
16. Return to the freezer with a small amount of sanitizing solution. With a pail below the door spout, dip the door-spout brush into the sanitizing solution and brush-clean the syrup ports in the freezer door, door spout, bottom of the driven spinner and spinner blade, and syrup line fittings.
    To ensure sanitary conditions are maintained, brush-clean each item for a total of 60 seconds, repeatedly dipping the brush in sanitizing solution.
17. With the syrup-port brush, brush each syrup-port hole 10 to 15 times. Dip the brush in sanitizing solution before brushing each port.
18. Fill the squeeze bottle with sanitizing solution. With a pail beneath the door, insert the tube end of the squeeze bottle into the syrup port, and squeeze the bottle firmly. This action will force solution out of the adjacent port and down around the spinner.
    This procedure should be performed for at least 10 seconds per port.
19. Install the syrup valves and the restrictor cap.

Priming

Note: *Evaluate the condition of LEDs and screen messages before performing priming procedures. If all four LEDs are flashing, the machine is locked.*

1. With a pail beneath the door spout, open the draw valve. Pour 2-1/2 gal. (9.5 L of **fresh** mix into the mix hopper and allow it to flow into the freezing cylinder. This will force out any remaining sanitizing solution. When only mix is flowing from the door spout, close the draw valve.
2. When mix stops bubbling down into the freezing cylinder, remove the cotter pin from the outlet fitting of the mix pump. Remove the mix feed tube. Insert the outlet end of the mix feed tube into the mix inlet hole in the mix hopper. Place the inlet end of the mix feed tube into the outlet fitting of the mix pump. Secure with the cotter pin. (See Figure 6-39.)

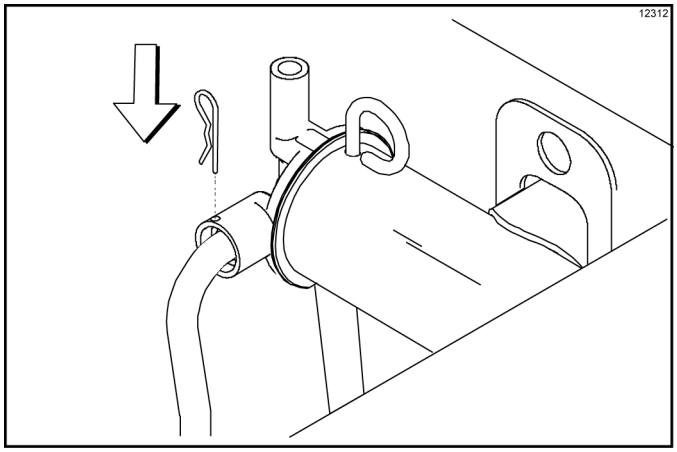

Figure 6-39

3. Install the shake cup holder. (See Figure 6-40.)

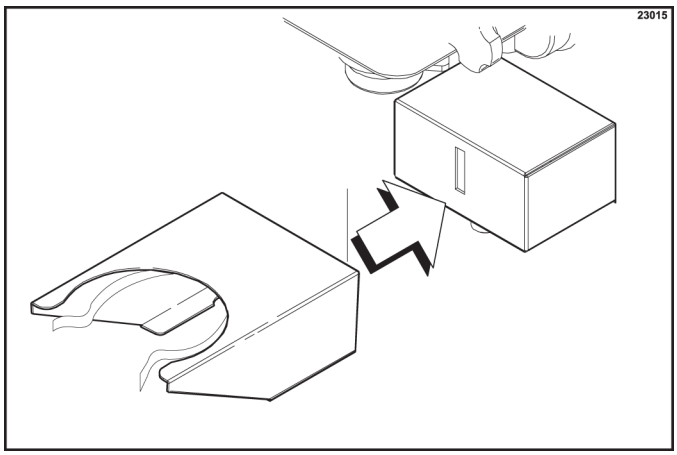

Figure 6-40

4. Press the AUTO key. (See Figure 6-41.)

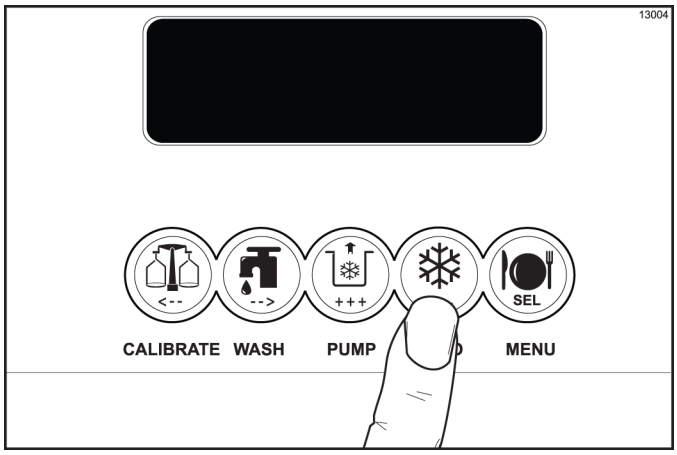

Figure 6-41

5. Fill the hopper with fresh mix and place the mix hopper cover in position.

Note: *Use only **fresh** mix when priming the freezer.*

CAUTION! When drawing product, allow the draw handle to close automatically. Manually closing the draw handle will damage the syrup valve and cause serious syrup flavor carryover.

Daily Closing Procedures

This procedure must be done at the close of business**.**

The function of the heat treatment cycle is to destroy bacteria by raising the temperature of the mix in the freezing cylinder and the hopper to a specified temperature for a specified period of time, and then bringing the temperature back down low enough to retard spoilage.

The heat treatment cycle will start at the time designated in the Auto Heat Time.

Important! *The level of mix in the hoppers must be high enough to cover the agitator paddles.*

Note: *If the CLEAN MANUALLY light is flashing, **do not** add mix. The machine must be disassembled and brush cleaned within 24 hours.*

The freezer must be in the Auto or Standby mode before the heat cycle may be started.
(See Figure 6-42.)

MODE:	**AUTO**
MIX:	**OK**
HOPPER	**40.0F**
BRUSH CLEAN ON:	**MM/DD**

Figure 6-42

1. Remove the hopper cover, shake cup holder, front drip tray, splash shield, and all three drip pans (two from the rear panel and one from the front panel).

   Make sure your hands are clean and sanitized before performing these next steps.

Note: *Pressing the CAL key will stop agitator movement for 10 seconds. The agitator will automatically restart after 10 seconds.*

2. Remove the agitator from the mix hopper and the restrictor cap from the freezer door spout.

3. Take the agitator, hopper cover, shake cup holder, drip pans, front drip tray, splash shield, and restrictor cap to the sink for further cleaning and sanitizing. Take the syrup hole plugs, spout cap, and spout cap O-ring to the sink for further cleaning and sanitizing.
4. Rinse these parts in cool, clean water.
5. Prepare a small amount of an approved 100 ppm cleaning solution (example Kay-5®). Use warm water and follow the manufacturer's specifications.
6. Brush-clean the parts.
7. Place the restrictor cap, front drip tray, shake cup holder, and splash shield on a clean, dry surface to air-dry overnight or until the heating cycle is complete.
8. Prepare a small amount of an approved 100 ppm sanitizing solution (example Kay-5®). Use warm water and follow the manufacturer's specifications.
9. Sanitize the syrup hole plugs, spout cap, spout cap O-ring, rear drip pan, agitator, and hopper cover.
10. Install the agitator back onto the agitator driveshaft housing. Replace the hopper cover. (See Figure 6-43.)

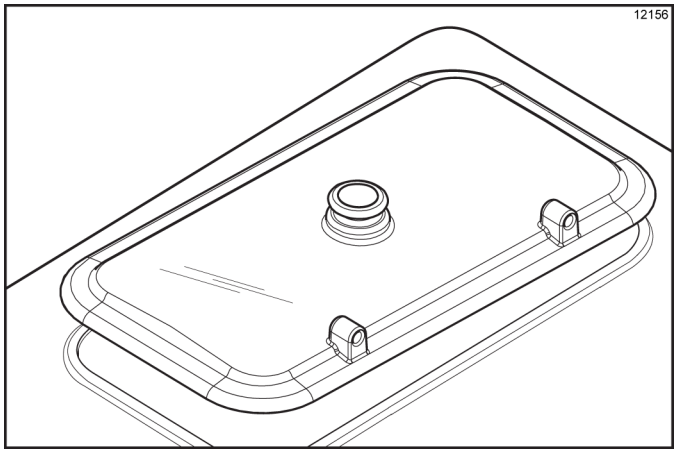

Figure 6-43

Important! *If you* ***do not*** *install the agitator correctly, the machine will fail the heat cycle and will lock out in the morning.*

11. Remove the syrup lines from the freezer door.
12. Return to the freezer with a small amount of cleaning solution. With a pail below the door spout, dip the door-spout brush into the cleaning solution and brush-clean the syrup ports in the freezer door, door spout and bottom of the driven spinner, spinner blade, and syrup line fittings. (See Figure 6-44.)

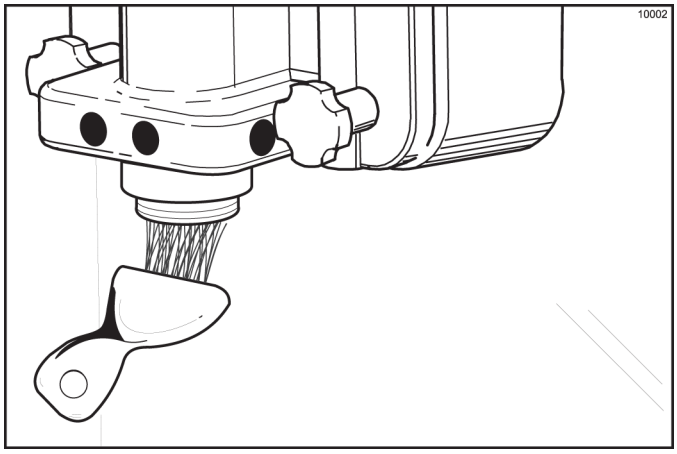

Figure 6-44

Note: *To ensure sanitary conditions are maintained, brush each item for a total of 60 seconds, repeatedly dipping the brush in cleaning solution.*

13. With the syrup port brush, brush each syrup-port hole 10 to 15 times. Dip the brush in the cleaning solution before brushing each port. (See Figure 6-45.)

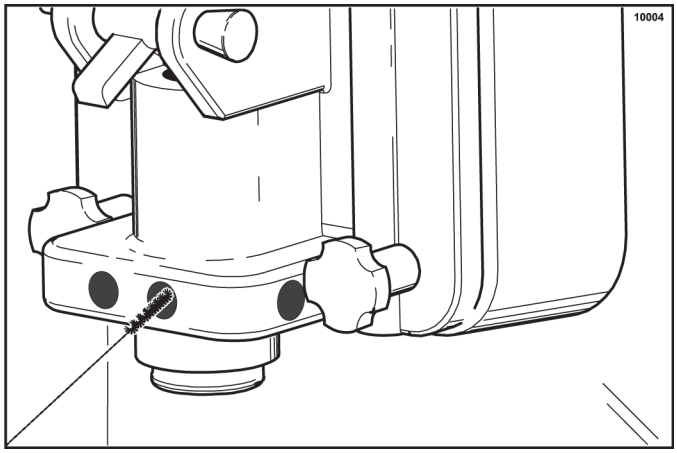

Figure 6-45

14. Fill the squeeze bottle with cleaning solution. With a pail beneath the door, insert the tube end of the squeeze bottle into each syrup port and squeeze the bottle firmly. This action will force solution out of the adjacent port and down around the spinner. This procedure should be performed for at least 10 seconds per port. (See Figure 6-46.)

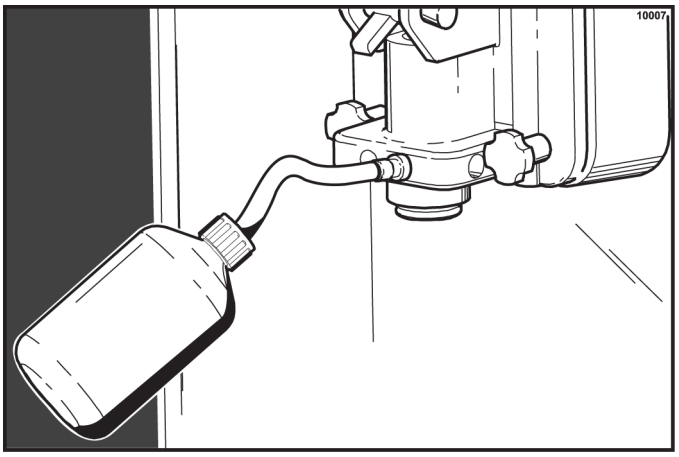

Figure 6-46

15. Place the spout cap O-ring in the spout cap. Fill the spout cap with sanitizing solution. While holding the draw valve closed, install the spout cap over the end of the door spout. This will cause sanitizing solution to backflow through the syrup ports. (See Figure 6-47.)

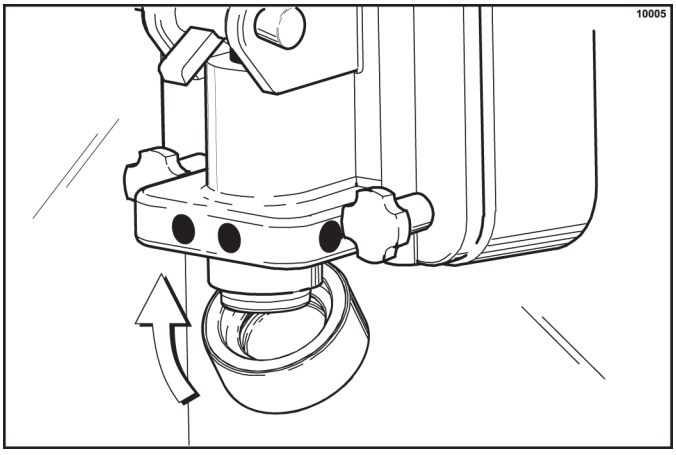

Figure 6-47

16. Install the syrup hole plugs in the syrup ports in the freezer door. (See Figure 6-48.)

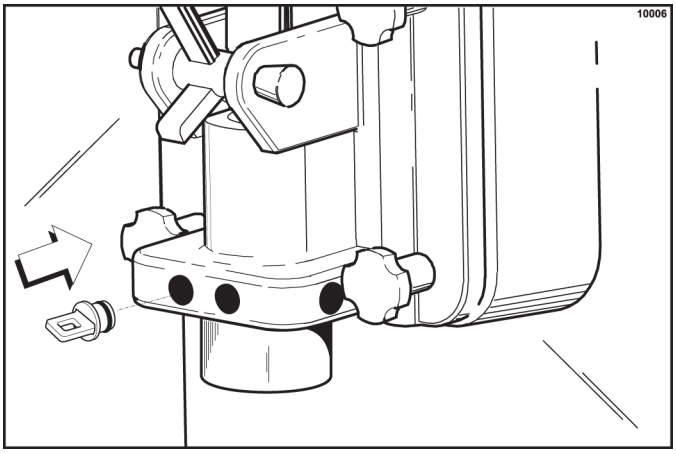

Figure 6-48

17. Remove, clean, and re-install the long drip pan through the front panel.
18. Install the short drip pan in the rear panel.
19. Use a clean, sanitized towel and wipe down the freezer door and area around the bottom of the freezer door.

The heat cycle will start when the clock on the machine reaches the Auto Heat Time. (See page 5-7).

There are three phases of the heat cycle: heating, holding and cooling. each phase has a time limit. if any one of the three phases fails to reach the proper temperatures within the time limit, the cycle will automatically abort and return to the Standby mode. The LCD will display the message: HEAT TREAT CYCLE FAILURE - FREEZER LOCKED - PRESS SEL KEY. The product may not be safe to serve. The freezer will be locked out (softlock) of the Auto mode. The operator will be given the option of pressing the AUTO key to begin a new heat cycle, or pressing the WASH key to place the freezer in the Off mode to allow a brush-clean of the machine.

Note: *Once the heating cycle has started, it cannot be interrupted. The heating cycle will take a maximum of 4 hours to complete with a full hopper.*

WARNING! DO NOT attempt to draw product or disassemble the machine during the HEAT cycle. The product is hot and under extreme pressure. Failure to follow this instruction may result in severe burn or product sprayed onto the skin.
If burns are severe, apply ice packs and contact a physician immediately.

When the heating cycle is complete, the control will return to the Standby mode.

Daily Opening Procedures

Evaluate the condition of LEDs and screen messages (HARD or SOFT lock, etc.) before performing opening procedures. As indicated in the illustration below, four flashing LEDs, indicate a locked condition.
(See Figure 6-49.)

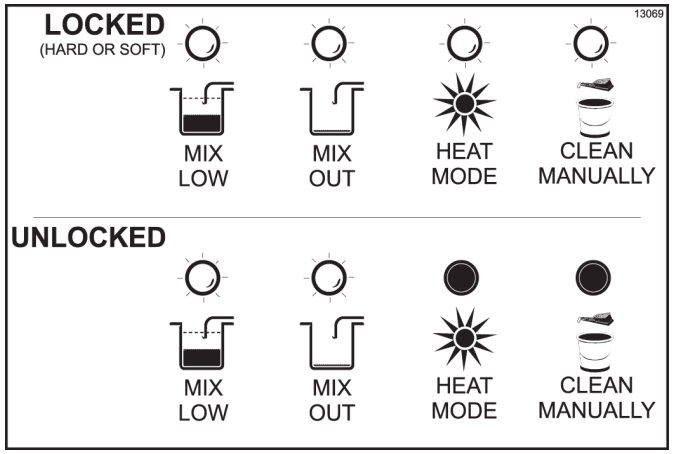

Figure 6-49

Setup

Note: *Make sure your hands are clean and sanitized before performing these next steps.*

1. When the heating cycle is complete, the normal display will appear, showing the machine in the Standby mode.
2. Prepare a small amount of an approved 100 ppm sanitizing solution (example Kay-5®). Use warm water and follow the manufacturer's specifications.
3. Remove the syrup hole plugs and spout cap with the O-ring from the freezer door. Sanitize the restrictor cap, syrup hole plugs, spout cap and O-ring, shake cup holder, front drip tray, and splash shield.
4. Return to the freezer with a small amount of sanitizing solution. With a pail below the door spout, dip the door-spout brush into the sanitizing solution and brush-clean the syrup ports in the freezer door, door spout, bottom of the driven spinner, spinner blade, and syrup line fittings. (See Figure 6-50.)

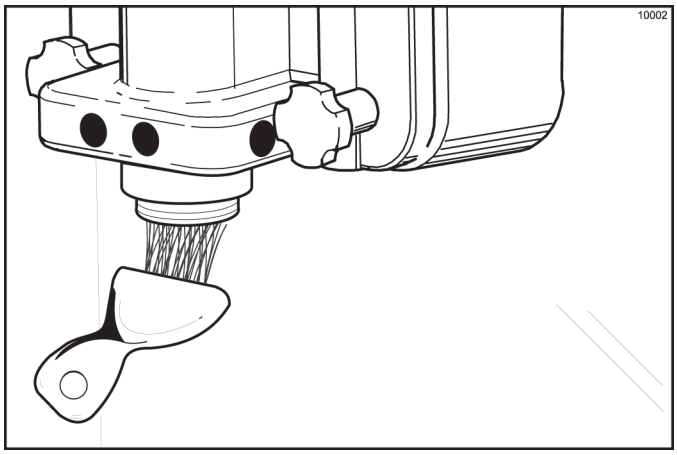

Figure 6-50

Note: *To ensure sanitary conditions are maintained, brush-clean each item for a total of 60 seconds, repeatedly dipping the brush in sanitizing solution.*

5. With the syrup-port brush, brush each syrup-port hole 10 to 15 times. Dip the brush in sanitizing solution before brushing each port.
(See Figure 6-51.)

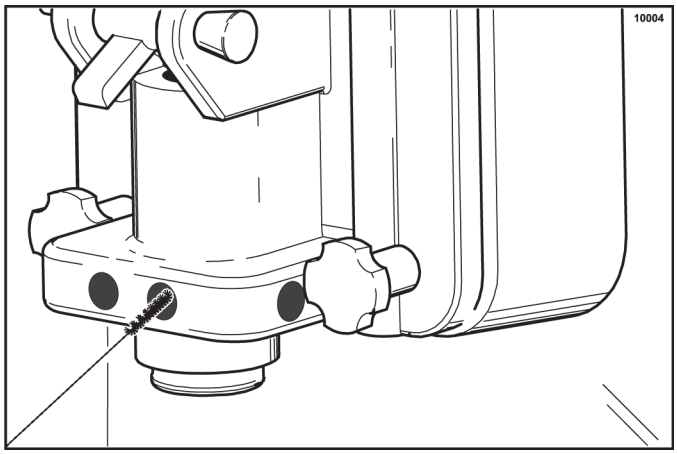

Figure 6-51

6

6. Fill the squeeze bottle with sanitizing solution. With a pail beneath the door, insert the tube end of the squeeze bottle into the syrup port, and squeeze the bottle firmly. This action will force solution out of the adjacent port and down around the spinner. This procedure should be performed for at least 10 seconds per port. (See Figure 6-52.)

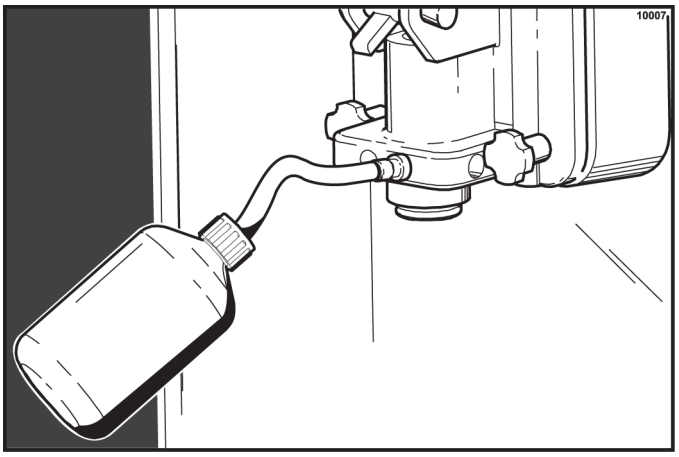

Figure 6-52

7. Install the restrictor cap on the freezer door spout. (See Figure 6-53.)

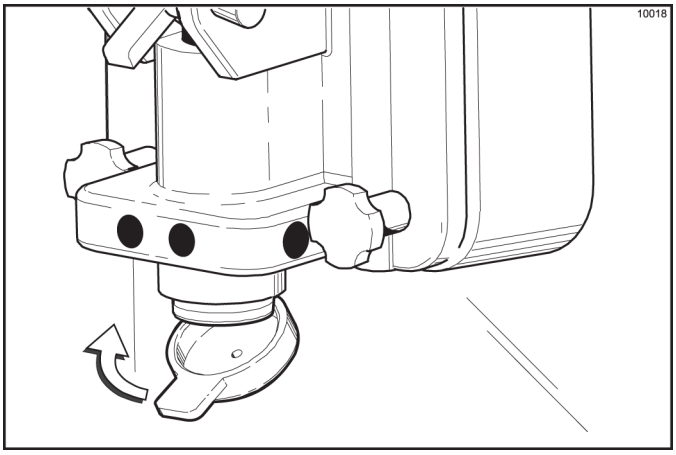

Figure 6-53

8. Using a clean, sanitized towel wipe down the freezer door and area around the bottom of the freezer door.
9. Install the shake cup holder, the front drip tray, and the splash shield.
10. When ready to resume normal operation, press the AUTO key. (See Figure 6-55.)



Figure 6-54

Note: *This procedure should be done 3 to 4 hours before the first shake is served, to build up ice crystals.*

Syrup System

Two main objectives in your opening procedures must be to fill the syrup tanks, and calibrate the syrup flow. This must be checked **daily** to ensure the high-quality shake you desire.

Discard syrup weekly and flush syrup lines at least once a week. This will prevent syrup clogging the lines and will break the bacteria chain. See page 6-22 to sanitize the syrup system.

The syrup tanks are located in the lower front syrup compartment. The syrup lines are color-wrapped. Make sure to match the color-wrapped syrup line to the correct syrup flavor. (See Figure 6-55.)

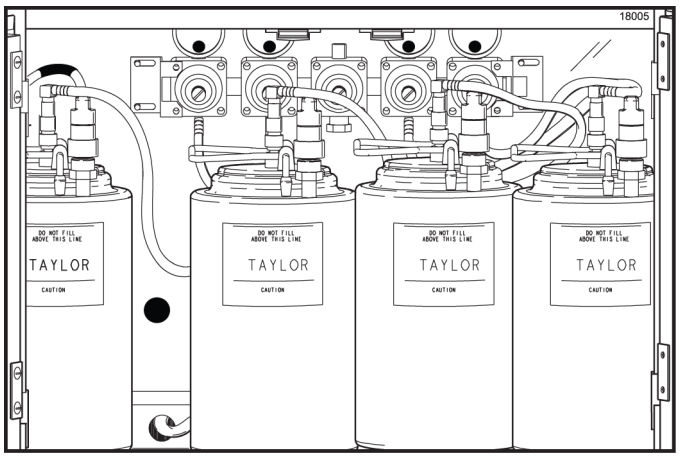

Figure 6-55

Note: *Vanilla and strawberry syrup lines use restrictors at the syrup tank quick disconnect connection to maintain proper calibration. If thin viscosity syrups are used in the special tank, it will be necessary to install a restrictor in the syrup line connection.*

1. Unscrew the quick disconnect from the elbow portion of the syrup line. Make sure the O-ring rests on the end of the quick disconnect fitting.
2. Place the restrictor on top of the O-ring and screw the quick disconnect back onto the syrup line.

Filling the Syrup Tanks

1. Pull back on the collar of the quick disconnect fitting for the air line. Allow the air pressure to escape from the syrup tank. (See Figure 6-56.)

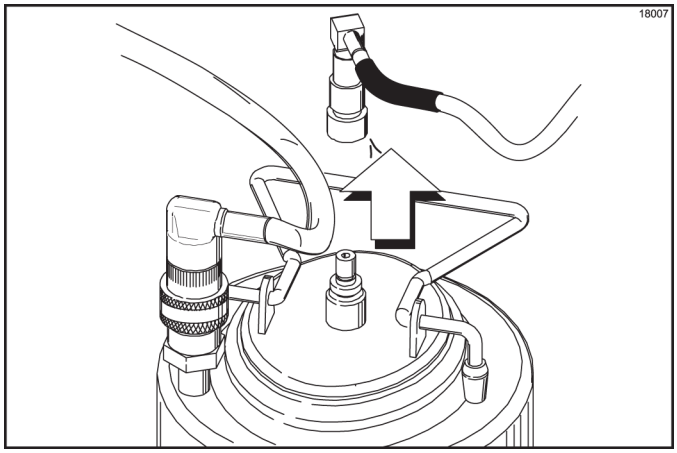

Figure 6-56

2. Disconnect the syrup line after you have disconnected the air line. (See Figure 6-57.)

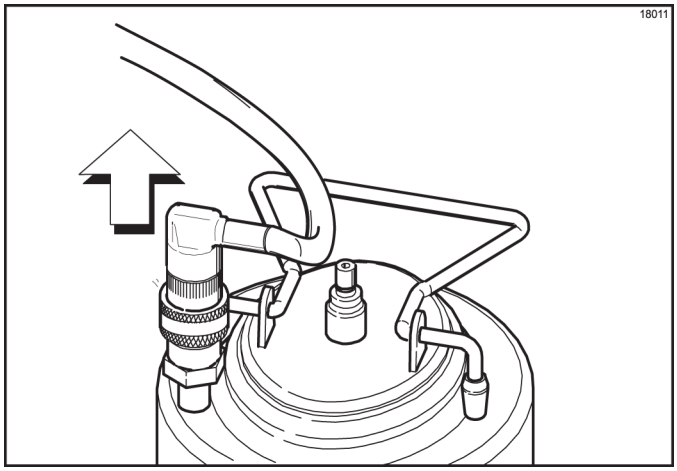

Figure 6-57

3. Remove the syrup tank from the compartment. Remove the syrup tank lid by lifting up on the locking lever. Fill the syrup tank with syrup to the indicating mark on the label. **Do not** overfill the tanks. (See Figure 6-58.)

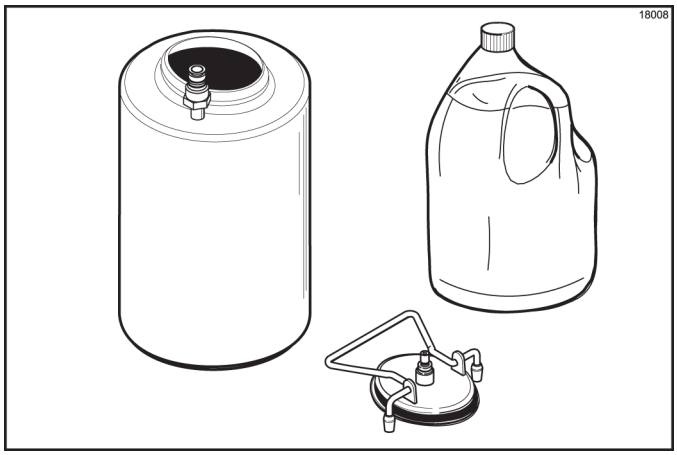

Figure 6-58

4. Replace the tank lid, match and connect the spiral wrapped syrup line to the syrup tank. Connect the air line to the syrup tank.
5. Repeat this procedure for all syrup tanks.

Calibrating the Syrup Flow

Calibrating must be done on a daily basis. It is vital that the correct amount of syrup be incorporated into the mix to obtain a quality shake. The cause of too thin shakes is often too much syrup. The cause of too thick shakes is often too little syrup.

1. To determine the rate of syrup flow, you will need a syrup sampler and a calibration cup indicating fluid ounces. The proper rate of syrup flow is 1 fl. oz. (30 ml) of syrup in 5 seconds. Once this rate is set, the correct amount of syrup will be blended with the shake base regardless of the size of shake served. (See Figure 6-59.)

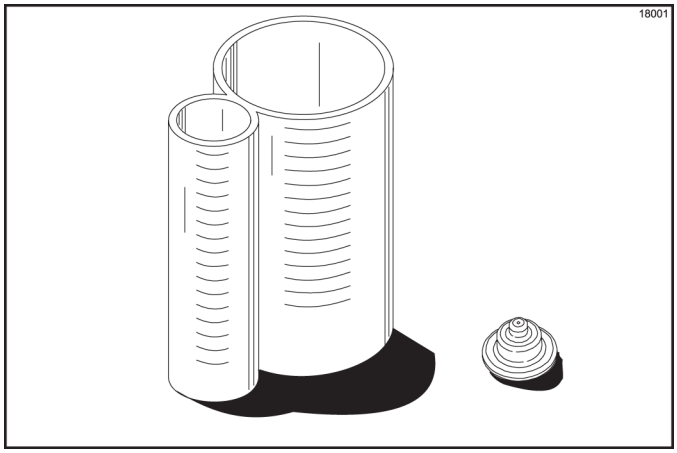

Figure 6-59

2. Install the syrup sampler to the fitting on one of the syrup lines. (See Figure 6-60.)

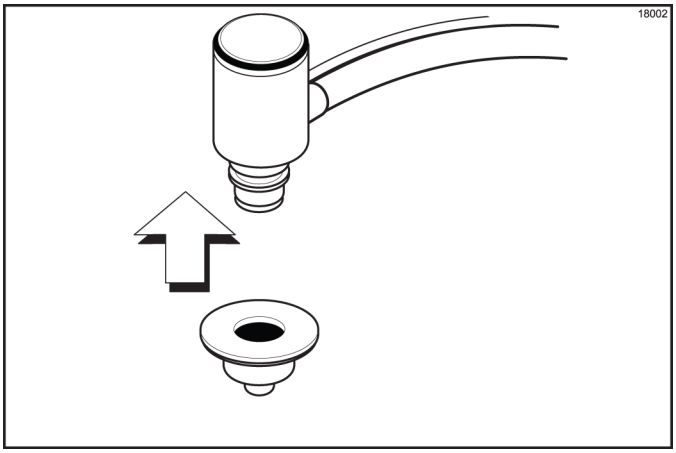

Figure 6-60

3. Push the corresponding flavor button for that syrup flavor. (See Figure 6-61.)

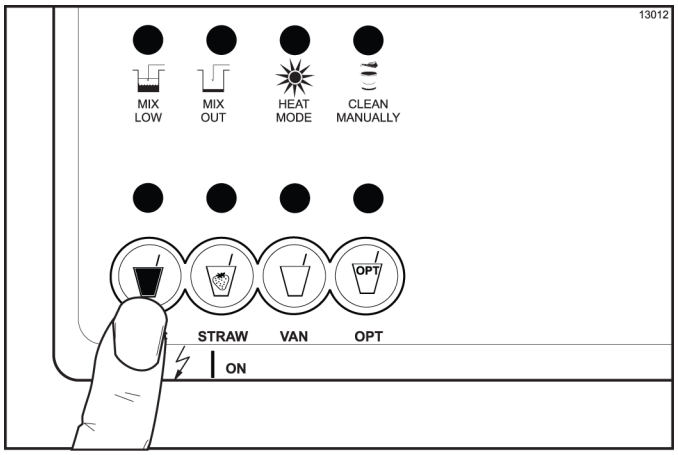

Figure 6-61

4. Hold an empty courtesy cup beneath the exit point of the syrup line. Press the CAL keypad (calibrate). A message will appear on the LCD. (See Figure 6-62.)

SYRUP SYSTEM PRESS		
AUTO	**- - -**	**START CAL**
WASH	**- - -**	**CONTINUOUS**
CAL	**- - -**	**STOP**

Figure 6-62

5. Press the WASH keypad. This will bleed any air pockets from the syrup line.

   When a steady stream of syrup is flowing into the cup, press the CAL keypad to stop the syrup flow. Discard the syrup in the cup. (See Figure 6-63.)

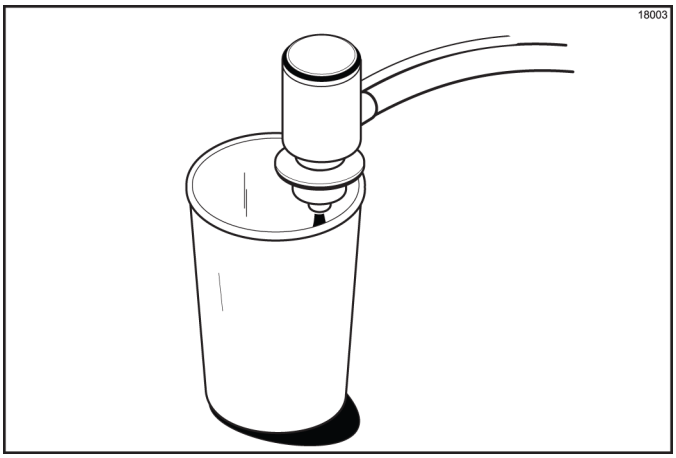

Figure 6-63

6. Hold the small portion of the calibrating cup under the syrup line with the syrup sampler. Press the CAL keypad. Press the AUTO keypad to check the rate of syrup flow. After 5 seconds the flow of syrup will automatically stop. If the amount of syrup received is 1 fl. oz. (30 ml), the syrup is properly calibrated. (See Figure 6-64.)

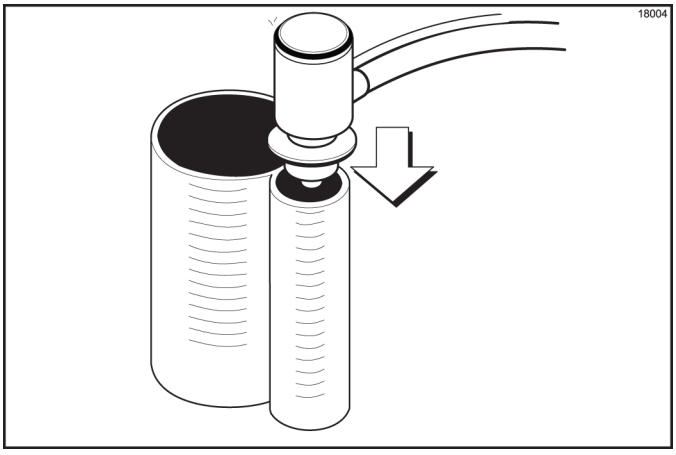

Figure 6-64

Adjusting the Syrup Pressure

If the amount of syrup is less than 1 fl. oz. (30 ml) the syrup pressure must be increased. If the amount of syrup is more than 1 fl. oz. (30 ml) the pressure must be decreased.

Inside the syrup compartment is a regulator manifold assembly with individual pressure regulators to control the amount of pressure to each tank and syrup line. (See Figure 6-65.)

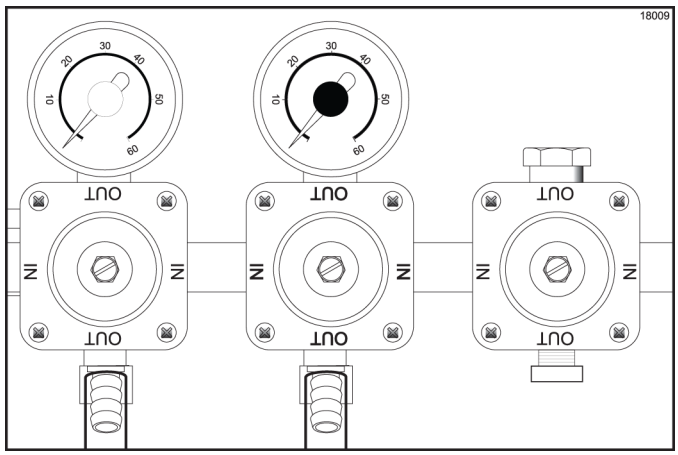

Figure 6-65

1. If less than 1 fl. oz. (30 ml) is received, the pressure must be increased. Loosen the lock nut. Using a flat blade screwdriver, turn the adjusting screw **clockwise.**
2. Recheck the syrup calibration. Tighten the lock nut after the correct calibration is achieved.
3. If more than 1 fl. oz. (30 ml) is received, the pressure must be decreased. Loosen the lock nut and turn the adjusting screw **counterclockwise** to zero. Remove the air line to the syrup tank to allow the pressure in the tank to escape. Reconnect the air line. Adjust the regulator to the new pressure setting and recheck the syrup calibration. Tighten the lock nut.
4. Repeat the “Calibrating the Syrup Flow” and “Adjusting the Syrup Pressure” for each additional syrup line.
5. Remove the syrup sampler. Lightly lubricate the O-ring on each syrup line fitting. (See Figure 6-66.)

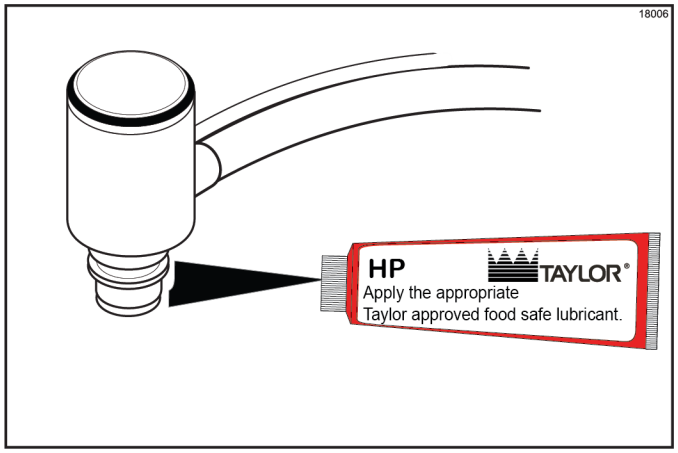

Figure 6-66

6. Attach the syrup lines to the freezer door. Insert the syrup line fitting into the syrup port in the freezer door. The flat side of the syrup line fitting must be aligned with the pin in the syrup port. Rotate the syrup line fitting upward to lock in place. (See Figure 6-67.)

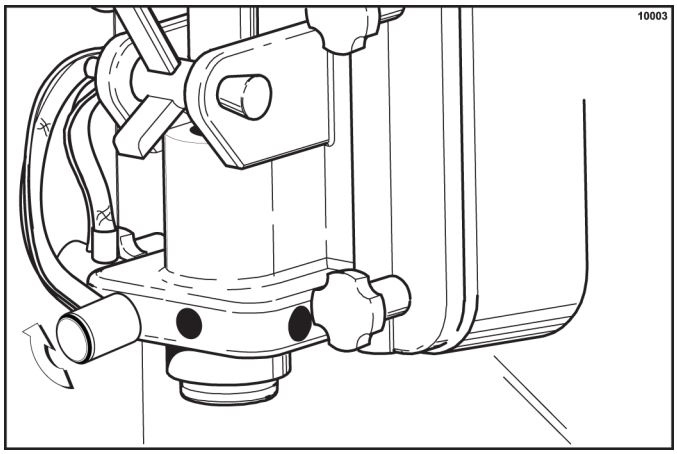

Figure 6-67

Note: *Whenever a particular syrup line is not used, the syrup hole plug found in the spare parts kit must be installed. Place the syrup hole plug O-ring into the groove of the syrup hole plug and lubricate. Align the flat portion of the syrup hole plug with the locking pin in the open syrup port of the freezer door. Insert the syrup hole plug and turn slightly to lock in place.*

7. Clean the calibration cup and syrup sampler.

   Note: *This procedure must be performed weekly.*

Closing Procedures

Important! *This procedure must be completed every 14 days.*

ALWAYS FOLLOW LOCAL HEALTH CODES.

To disassemble the PH61, the following items will be needed:

- Two pails for cleaning and sanitizing
- Cleaning brushes (provided with freezer)
- Cleaning solution
- Sanitizing solution
- Clean, sanitized towels
- Parts trays

Draining Product from the Freezing Cylinder

1. Cancel automatic operation by pressing the AUTO key. (See Figure 6-68.)



Figure 6-68

2. Remove the shake cup holder. Set it aside for cleaning later with all parts.
3. Remove the hopper cover and agitator. Take these parts to the sink to wash, rinse, and sanitize.
4. With a pail under the door spout, press the WASH and PUMP keys. Open the draw valve and start to drain the product from the freezing cylinder and mix hopper. (See Figure 6-69.)

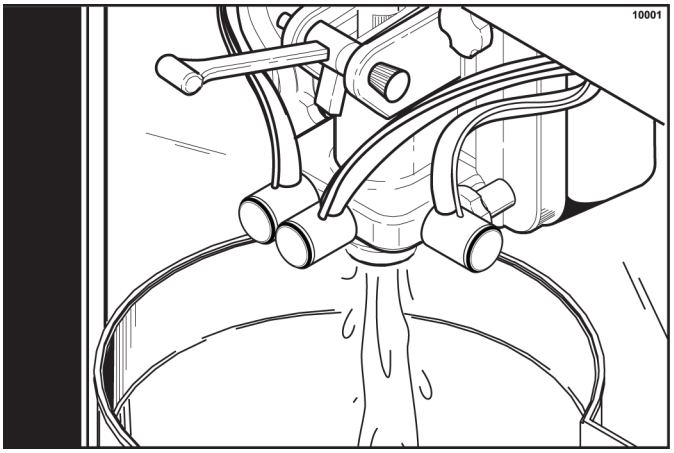

Figure 6-69

5. When the flow of product stops, press the WASH and PUMP keys, canceling the Wash and Pump modes, and close the draw valve. Discard this product. (See Figure 6-70.)

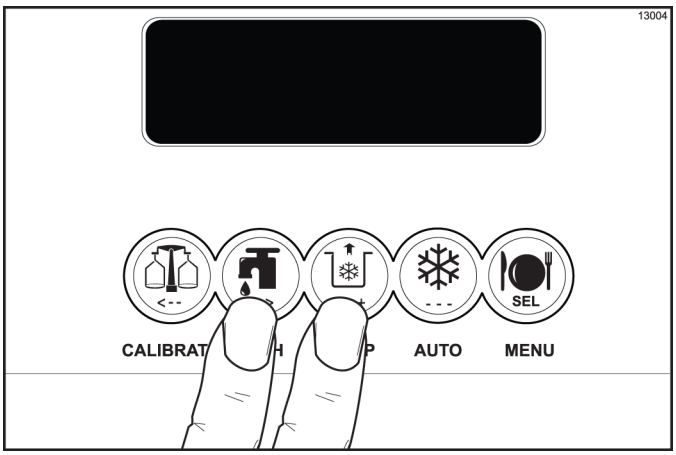

Figure 6-70

6. Remove the cotter pin, mix feed tube, pump clip, and assembled air/mix pump. Place the parts into the parts tray.
7. Remove the syrup lines from the freezer door by rotating the syrup line fittings and pulling out.

Rinsing

1. Pour 2 gal (7.6 L) of cool, clean water into the mix hopper. With the white-hopper brush, scrub the mix hopper, mix-level sensing probes, and outside of the agitator driveshaft housing. Using the double-ended brush, brush-clean the mix inlet hole. (See Figure 6-71.)

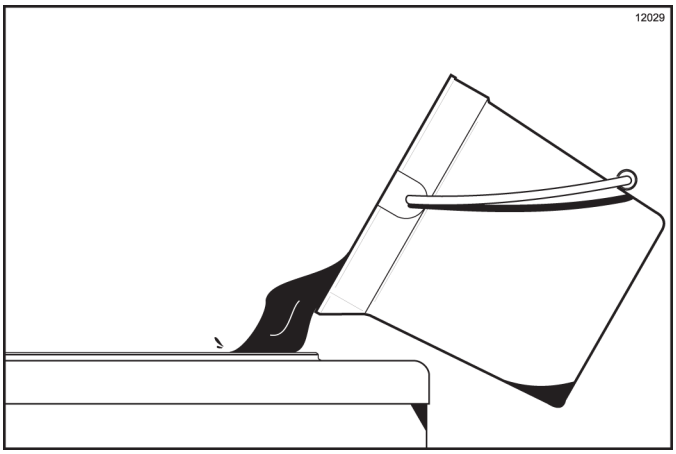

Figure 6-71

Note: ***Do not*** *brush-clean the mix inlet hole while the machine is in the Wash mode.*

2. With a pail beneath the door spout, press the WASH key. (See Figure 6-72.)

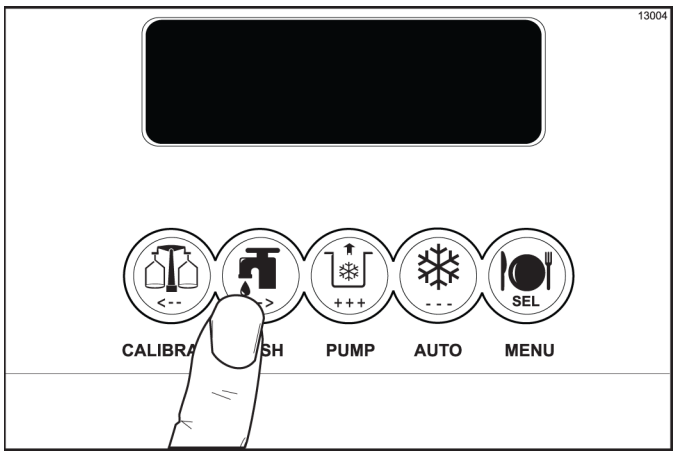

Figure 6-72

3. Open the draw valve on the freezer door. Drain all the rinse water from the door spout, close the draw valve, and press the WASH key, canceling the wash cycle.
4. Repeat steps 1 through 3 using clean, warm water, until the water being discharged is clear.

Cleaning and Sanitizing

1. Prepare 2.5 gal (9.5 L) of an approved 100 ppm cleaning solution (example Kay-5®). Use warm water and follow the manufacturer's specifications.
2. Pour the cleaning solution into the hopper and allow it to flow into the freezing cylinder.
3. Using the white-hopper brush, clean the mix hopper, mix-level sensing probes, and outside of the agitator driveshaft housing. Using the double-ended brush, clean the mix inlet hole.

Note: ***Do not*** *brush-clean the mix inlet hole while the machine is in the Wash mode.*

4. Press the WASH key. This will cause the cleaning solution in the freezing cylinder to come in contact with all areas of the freezing cylinder.
5. Place an empty pail beneath the door spout.
6. Open the draw valve on the freezer door and draw off all the solution.
7. Once the cleaning solution stops flowing from the door spout, close the draw valve and press the WASH key, canceling the Wash mode.
8. Prepare 2.5 gal. (9.5 L) of an approved 100 ppm sanitizing solution (example Kay-5®). Use warm water and follow the manufacturer's specifications.
9. Repeat steps 2 through 7 with the sanitizing solution.

Disassembly

Note: *Failure to remove the parts, brush-clean, and re-lubricate the parts will result in damage to the machine. These parts must be removed every 14 days or the machine will lockout and will not operate.*

WARNING! Make sure the power switch is in the OFF position. Failure to follow this instruction may result in severe personal injury from hazardous moving parts.

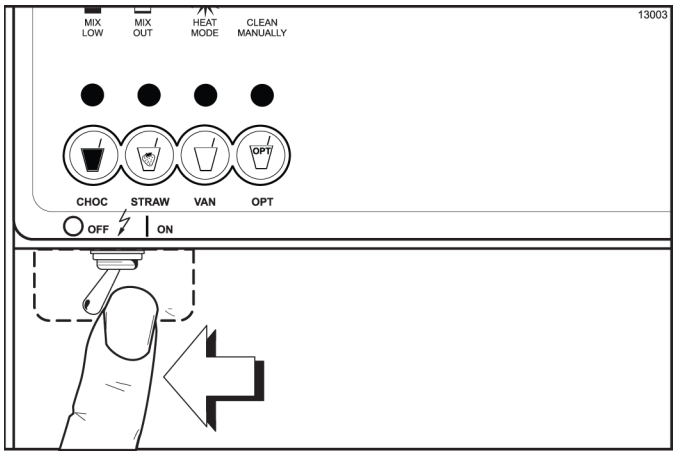

Figure 6-73

In order for the control to recognize that the machine has been brush-cleaned, the following criteria must be met.

- All freezing cylinder and hopper temperatures must be above 60°F (16°C).
- The mix out and mix low probes must not be satisfied.
- The power switch must remain in the OFF position for at least 5 minutes.

Note: *These criteria must be met simultaneously. These criteria will be met when the machine is properly brush-cleaned.*

6

The following screen is displayed if the machine is not in a brush-clean state. (See Figure 6-74.) If any of the requirements for a brush-cleaning have not been met, the time displayed will remain at 5:00 minutes.

	POWER SWITCH OFF	
OUT	**TIME: 4:40**	**OUT**
68.5	**HOPPER**	**62.1**
69.5	**BARREL**	**67.7**

Figure 6-74

When all the requirements for a brush-cleaning are met, and the 5 minutes expire, the screen will change to the second screen, which is the standard POWER SWITCH OFF screen. (See Figure 6-75.)

POWER SWITCH OFF
- = - = - = - = - = -
UNIT CLEANED

Figure 6-75

When the POWER SWITCH is set in the ON position, the system mode of operation screen is displayed. In this example, the machine is ON, but no mode of operation has been selected. The second line of the display indicates whether there is a sufficient supply of mix in the hopper or if there is a LOW or OUT mix condition. The third line of the display shows the temperature of the mix hopper. After pressing the AUTO keypad, the last line of the display shows the month and date (MM = month, DD = day) that the machine needs to be disassembled and brush-cleaned. (See Figure 6-76.)

STANDBY	**:MODE:**	**WSH-PMP**
OUT	**:MIX:**	**LOW**
40.0F	**HOPPER**	**40.0F**
BRUSH CLEAN ON:	**10/31**	

Figure 6-76

Note: *The Manual Clean LED will begin flashing 24-hours prior to a 14 day lockout. The four mode LEDs will return to their normal function when the unit is unlocked.*

With the parts tray available, remove the following parts and place in the parts tray:

1. Remove the syrup lines from the syrup ports, and remove the restrictor cap from the bottom of the door spout.
2. Remove the spinner blade from the bottom of the door spout by lifting up the locking collar on the spinner coupling and pulling down the blade.
3. Remove the handscrews, freezer door, beater assembly with driveshaft seal, and scraper blades from the freezing cylinder.
4. Remove the driveshaft seal from the driveshaft of the beater assembly.
5. Remove the freezer door O-ring, front bearing, pivot pin, draw handle, and draw valve spinner assembly. Remove the O-ring from the pivot pin.
6. Disassemble the draw valve spinner assembly. Remove the driven spinner by grasping the draw valve and pulling the driven spinner out. Remove the spinner shaft seal.
7. Remove the two O-rings from the draw valve.

Note: *To remove O-rings, use a clean, sanitized towel to grasp the O-ring. Apply pressure in an upward direction until the O-ring pops out of its groove. With the other hand, push the top of the O-ring forward and it will roll out of the groove and can easily be removed. If there is more than one O-ring to be removed, always remove the rear O-ring first. This will allow the O-ring to slide over the forward O-rings without falling into the open grooves.*

8. From the pump cylinder, remove the retaining pin, valve cap, piston, and feed tube. Remove all O-rings and the check ring.
9. Remove the pump driveshaft from the drive hub in the rear wall of the mix hopper.
10. Remove the two small O-rings and one large O-ring from the driveshaft.

Note: *If the drip pans are filled with an excessive amount of mix, the driveshaft seal(s) or O-ring(s) should be replaced or properly lubricated.*

Brush Cleaning

1. Prepare a sink with 2.5 gal. (9.5 L) of an approved 100 ppm cleaning solution (example Kay-5®). Use warm water and follow the manufacturer's specifications.

   Note: *Make sure all brushes provided with the freezer are available for brush-cleaning.*

2. Thoroughly brush-clean all disassembled parts and parts trays in the cleaning solution, making sure all lubricant and mix film is removed. Make sure to brush all surfaces and holes, especially holes in the pump valve body and the small syrup holes in the freezer door.
3. Rinse all parts with clean, warm water, one tray at a time, including the tray.
4. Return to the freezer with a small amount of cleaning solution. Using the black brush, clean the rear shell bearing at the back of the freezing cylinder. (See Figure 6-77.)

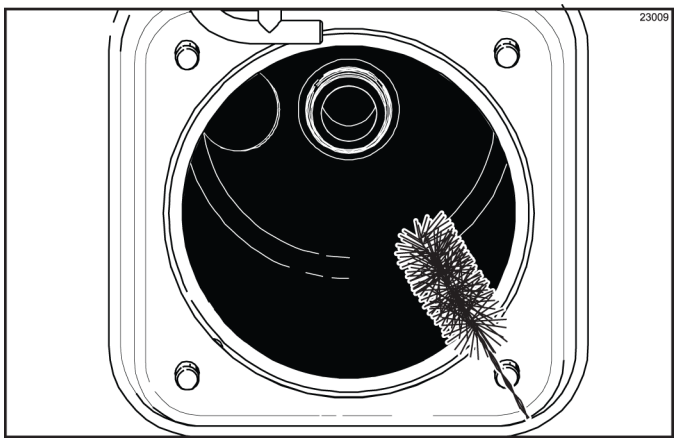

Figure 6-77

5. Using the black brush, clean the drive hub opening in the rear wall of the mix hopper. (See Figure 6-78.)

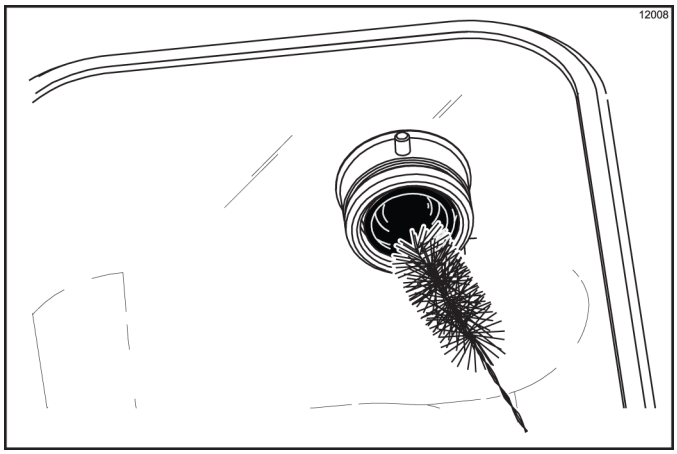

Figure 6-78

6. Using the double-ended brush, brush-clean the syrup line fittings.
7. Prepare a sink with 2.5 gal. (9.5 L) of an approved 100 ppm sanitizing solution (example Kay-5®). Use warm water and follow the manufacturer's specifications. Repeat step 3 with the sanitizing solution.
8. Sanitize all parts in the sanitizing solution for a minimum of 1 minute.
9. Place disassembled parts on clean, sanitized parts trays.
10. Wipe all exterior surfaces of the freezer with a clean, sanitized towel.

Sanitizing the Syrup Systems

Two main objectives in your closing procedures must be to discard all syrup at least once a week, and flush the syrup lines at least twice a week.

This must be done on a regular basis to keep a buildup of old syrup from clogging the lines, and to break the bacteria chain which develops in the tanks and lines.

Note: *Calibrating the syrup flow must be done once every morning, especially after flushing the syrup lines.*

Sanitizing the Syrup Tanks

1. Pull back on the collar of the quick disconnect fitting of the air line. Allow the air pressure to dissipate from the syrup tank. Disconnect the syrup line.
2. Remove the syrup tank from its compartment. Remove the syrup tank lid by lifting up on the locking lever, and discard the remaining syrup.
3. Rinse the syrup tank with clean, warm water. Prepare 1/2 gal. (1.9 L) of the recommended sanitizing solution with warm water in the syrup tank.
4. Brush-clean the inside and outside of the tank.
5. Remove the syrup line fitting. Remove the dip tube and O-ring from the syrup tank.
6. Thoroughly brush-clean the dip tube, syrup line fitting, and O-ring using the sanitizing solution.
7. Reassemble the dip tube, O-ring, and syrup line fitting.
8. Pour off all the sanitizing solution and place the tank in an upside-down position on a clean, dry surface to air-dry.
9. Repeat this procedure for all the syrup tanks.

Sanitizing the Syrup Lines

1. Prepare 1 gal. (3.8 L) of the recommended sanitizing solution with **warm** water in the spare syrup tank.
2. Replace and lock the tank lid in position.
3. Place this tank in the syrup compartment. Connect one of the air lines and the corresponding syrup line to the syrup tank filled with sanitizing solution.
4. Place the power switch in the ON position. This will activate the air compressor to supply pressure to the syrup system.
5. Install the syrup sampler to the fitting of the syrup line.
6. Press the corresponding flavor button for the syrup line being sanitized.
7. Place an empty pail beneath the exit point of the syrup line. Press the CAL keypad. A message will appear on the LCD.
8. Press the WASH keypad. Flush the syrup line until the solution runs clear. Press the CAL keypad to stop the flow of sanitizing solution.

   Note: *This procedure will thoroughly clean the syrup lines and prevent bacteria buildup.*
9. Turn the syrup tank with the sanitizing solution upside-down. Press the CAL keypad. Press the WASH keypad to clear the syrup line of any remaining sanitizer. When the sanitizer has been flushed from the syrup lines, press the CAL keypad to complete this step.
10. Repeat this procedure for all syrup lines.
11. Place the power switch in the OFF position.

During Cleaning and Sanitizing

ALWAYS FOLLOW LOCAL HEALTH CODES.

Cleaning and sanitizing schedules are governed by your State or local regulatory agencies and must be followed accordingly. The following checkpoints should be stressed during the cleaning and sanitizing operations.

IMPORTANT! *Cleaning and sanitizing must be performed daily.*

Troubleshooting Bacterial Count

- ☐ Thoroughly clean and sanitize the machine regularly, including complete disassembly and brush-cleaning.
- ☐ Use all brushes supplied for thorough cleaning. The brushes are specially designed to reach all mix passageways.
- ☐ Use the white-bristle brush to clean the mix inlet hole which extends from the mix hopper down to the rear of the freezing cylinder.
- ☐ Use the black-bristle brush to thoroughly clean the rear shell bearing located at the rear of the freezing cylinder. Use a generous amount of cleaning solution on the brush.
- ☐ Properly prepare the cleaning and sanitizing solutions. Read and follow the label directions carefully. Too **strong** of a solution may damage the parts, and too **weak** of a solution will not do an adequate job of cleaning or sanitizing.
- ☐ Empty all syrup from the tanks and discard at least once a week.
- ☐ Thoroughly clean and sanitize the syrup lines at least once a week.
- ☐ The temperature of mix in the mix hopper and walk-in cooler should be below 40ºF (4.4ºC).
- ☐ Discard remaining mix from the freezer during closing procedures.

Regular Maintenance Checks

- ☐ Rotate the scraper blades to allow both sides of the knife edge to wear evenly. This will contribute to self-sharpening and help maintain fast, efficient freezing.
- ☐ Replace scraper blades that are bent, damaged, or worn down.
- ☐ Before installing the beater, make sure that scraper blades are properly attached over the beater pins.
- ☐ Dispose of O-rings and seals if they are worn, torn, or fit too loosely, and replace them with new ones.
- ☐ Check the rear shell bearing for signs of wear (excessive mix leakage in rear drip pan) and make sure it is properly cleaned.
- ☐ Using a screwdriver and cloth towel, keep the rear shell bearing and the female drive socket free of lubricant and mix deposits.
- ☐ Follow all lubricating procedures as outlined in Freezing Cylinder Assembly on page 6-1.
- ☐ On air-cooled machines, check the condenser for accumulation of dirt and lint. Dirty condensers will reduce the efficiency and capacity of the machine. Condensers and filters should be cleaned monthly. Remove the rear panel to gain access to the condenser. Use a soft brush to clean between the fins of the condenser. Never use screwdrivers or other metal probes to clean between the fins.
- ☐ On water-cooled machines, check the water lines for kinks or leaks. Kinks can occur when the machine is moved back and forth for cleaning or maintenance purposes. Deteriorated or cracked water lines should be replaced only by a Taylor sevice technician.

Winter Storage

If the place of business is to be closed during the winter months, it is important to protect the freezer by following certain precautions, particularly if the building is to be left unheated and subject to freezing conditions.

Disconnect the freezer from the main power source to prevent possible electrical damage.

On water-cooled freezers, disconnect the water supply. Use air pressure to blow out any water remaining in the condensers.

Your local Taylor distributor can perform this service for you.

Wrap detachable parts of the freezer (such as beater assembly and freezer door) and place in a protected, dry place. Rubber trim parts and gaskets can be protected by wrapping with moisture-proof paper. All parts should be thoroughly cleaned of dried mix or lubrication accumulations which can attract mice and other vermin.

Table 8-1

Problem	Probable Cause	Corrective Action
1. All four LEDs are flashing.	a. The freezer is locked.	a. See soft lock and hard lock information on page 5-4.
2. Soft lock message appears on LCD.	a. More than 24 hours since the last heat treatment cycle.	a. The freezer must go through a heat treatment cycle every 24-hours. The freezer must now be disassembled and brush-cleaned or placed in a heat cycle.
	b. The power switch is in the OFF position.	b. The power switch must be in the ON position. The freezer must now be disassembled and brush-cleaned or placed in a heat cycle.
	c. The freezer is not in the Auto mode.	c. The freezer must be in the Auto mode. Freezer must now be disassembled and brush-cleaned or placed in a heat cycle.
	d. MIX OUT condition.	d. The level of mix in the mix hopper must be above the mix low probe. The freezer must now be disassembled and brush-cleaned or placed in a heat cycle.
	e. The agitator is not installed.	e. The agitator must be cleaned and installed before starting the heat treatment cycle. The freezer must now be disassembled and brush cleaned.
	f. The agitator is not rotating.	f. The agitator must be cleaned before starting the heat treatment cycle. Disassemble the freezer and brush-clean.
	g. An equipment fault has occurred.	g. See Screen H in the operator's Menu to determine the cause.
3. Hard lock message appears on the LCD.	a. A barrel or hopper thermistor is faulty.	a. Call a service technician.
	b. More than 14-days since the last brush-cleaning.	b. The freezer must be disassembled and brush-cleaned every 14-days.

Problem	Probable Cause	Corrective Action
4. No product is being dispensed.	a. Low on mix. The MIX OUT light is on.	a. Add mix to the mix hopper.
	b. The power switch is in the OFF position.	b. Place the power switch to ON and press the AUTO key.
	c. Freeze-up in mix inlet hole.	c. Call a service technician.
	d. Beater motor is out on reset.	d. Clear the tone. Allow the beater motor to cool. Place the power switch to OFF. Press the reset button firmly, place the power switch to ON, and press the WASH key. Open the side access panel and observe that the driveshaft is turning clockwise as viewed from the front of the machine. Press the AUTO key to return to the Auto mode. If the beater motor should go off on reset again, call a service technician.
	e. Air/mix pump is incorrectly assembled or improperly lubricated.	e. Follow assembly procedures carefully.
	f. The mix pump ball crank is broken.	f. Call a service technician.
	g. The pump motor is not activated.	g. Push the reset button. The draw valve must be fully opened to activate the pump motor.
5. The product is too thick.	a. Not enough syrup - 1 fl. oz. (30 ml) in 5 seconds.	a. Calibrate the syrups. Check that the syrup tanks have an adequate syrup supply.
	b. Insufficient mix in the freezing cylinder.	b. Check the air/mix pump assembly.
	c. Improper priming procedures.	c. Drain the freezing cylinder and re-prime the machine.
	d. Air/mix pump incorrectly assembled.	d. Follow assembly procedures carefully.
	e. The viscosity control is set too cold.	e. Call a service technician.
	f. Freeze-up in mix inlet hole.	f. Call a service technician.
6. Product is too soft.	a. Too much syrup - 1 fl. oz. (30 ml) in 5 seconds.	a. Calibrate syrups.
	b. Outdrawing capacity of freezing cylinder.	b. Continuous draw rate is approximately one 16 oz. (473 ml) shake by volume every 15 to 20 seconds.
	c. Inadequate airspace.	c. Minimum of 6 in (152 mm) airspace around all sides.
	d. Dirty condenser or air filters on air-cooled machines.	d. Clean regularly.
	e. Inadequate water supply on water-cooled machines.	e. Check the water supply. Check the water lines for leaks or kinks.
	f. Bad scraper blades.	f. Replace the scraper blades.
	g. The viscosity control is set too warm.	g. Call a service technician.
	h. Air passage is blocked in the pump.	h. Brush-clean the pump components and re-assemble.

Problem	Probable Cause	Corrective Action
7. The mix in the hopper is too warm.	a. Hopper cover is not in position. b. The agitator is not installed. c. The hopper temperature is out of adjustment.	a. Clean the hopper cover and place in position. b. Clean the agitator and install. c. Call a service technician.
8. The mix in hopper is too cold.	a. The hopper temperature is out of adjustment.	a. Call a service technician.
9. Product is collecting on top of draw valve.	a. Inadequate lubrication of spinner shaft or seal. b. Spinner shaft seal is missing or worn.	a. Lubricate properly. b. Install or replace the spinner shaft seal.
10.Product is collecting on top of the freezer door.	a. The top O-ring on draw valve is improperly lubricated or worn.	a. Lubricate properly or replace the O-ring.
11.Excessive mix leakage from the bottom of door spout.	a. Bottom O-ring on draw valve is improperly lubricated or worn.	a. Lubricate properly or replace the O-ring.
12.Excessive mix leakage into the long drip pan.	a. The seal on driveshaft is improperly lubricated or worn. b. The seal is installed inside-out on the driveshaft. c. Worn or missing O-rings on pump driveshaft. d. Inadequate lubrication of the driveshaft. e. The driveshaft and beater assembly work forward. f. Worn rear shell bearing. g. Gearbox out of alignment.	a. Lubricate properly or replace the seal. b. Install correctly. c. Install or replace the O-rings. d. Lubricate properly. e. Call a service technician. f. Call a service technician. g. Call a service technician.
13.The drive shaft is stuck in the drive coupling.	a. Mix and lubricant collected in drive coupling. b. Rounded corners of driveshaft, drive coupling, or both. c. Gearbox is out of alignment.	a. Brush-clean the rear shell bearing area regularly. b. Call a service technician. c. Call a service technician.
14.Freezing cylinder walls scored.	a. Missing or worn front bearing. b. Broken beater pins. c. Gearbox is out of alignment.	a. Install or replace the front bearing. b. Repair or replace the beater assembly. When installing scraper blades, be sure they are properly attached over the pins. c. Call a service technician.
15.Spinner shaft will not rotate to blend mix and syrup.	a. Flexible coupling is broken. b. Pin is missing in quick disconnect of spinner coupling. c. Spinner motor is out on thermal overload.	a. Call a service technician. b. Call a service technician. c. Allow the spinner motor to cool. Also check lubrication on spinner shaft. Properly align the motor and lubricate properly.
16.Large adjustments are necessary to receive 1 fl. oz. (30 ml) in 5 seconds.	a. Syrup lines are not matched with correct syrup flavor. b. The plunger is sticking in the syrup valve. c. Plugged syrup line fitting at freezer door connection. d. Verify that the proper syrup selection was made.	a. Match the color-wrapped syrup lines to the correct syrup flavors. b. Clean the valve. c. Clean the syrup line fitting. d. Make the proper syrup selection.

Problem	Probable Cause	Corrective Action
17.Pump will not operate in the Pump mode.	a. Pump motor is not activated. b. The membrane switch is defective.	a. Push the reset button. b. Call a service technician.
18.Machine will not run when in the Auto mode.	a. Machine is unplugged. b. Beater motor is out on reset. c. Circuit breaker off or blown fuse. d. Low on mix. The MIX OUT light is on. e. Water is turned OFF on water-cooled machines.	a. Plug into wall receptacle. b. Clear the tone. Allow the beater motor to cool. Place the power switch to OFF. Press the reset button firmly. Place the power switch to ON, and press the WASH key. Open the side access panel and observe that the drive shaft is turning clockwise as viewed from the front of the machine. Press the AUTO key to return to the Auto mode. If the beater motor should go off on reset again, call service technician. c. Turn the breaker on or replace the fuse, and clear the fault. d. Add mix to the mix hopper and press the AUTO key. e. Turn water on, and clear the fault.
19.Air compressor runs too often for normal usage.	a. Air leak in the system.	a. Use a soap solution to locate the leak and repair.
20.Liquid crystal display is blank.	a. Machine is unplugged. b. Circuit breaker is off or blown fuse. c. Component failure. d. LCD intensity needs adjusting.	a. Plug into wall receptacle. b. Turn the circuit breaker on or replace the fuse, and clear the fault. c. Call a service technician. d. Call a service technician.
21.Product is not feeding into the freezing cylinder.	a. The mix inlet hole is frozen up.	a. The hopper temperature needs adjustment. Call service technician.
22.The draw handle does not close.	a. Mix is on the sensing eye.	a. Clean the sensing eye.
23.Product “popping” when drawn.	a. Pump assembled incorrectly.	a. Assemble and lubricate according to instructions in this manual.
24.Freezer shuts off, but fault tone continues.	a. Fault has occurred in the freezer. b. Inadequate air clearance around the freezer.	a. Verify condition in the Operator Menu “fault” screen. Clear fault accordingly. b. Minimum of 6 in. (152 mm) air space around all sides to prevent recirculation of warm air.
25.Syrup flows constantly or not at all. Difficult to calibrate syrups.	a. Syrup lines are clogged. b. The syrup valve plunger is stuck.	a. Disassemble and clean the syrup valves. Flush syrup lines with warm water and sanitize weekly. b. Disassemble and clean the syrup valve.
26.Shakes have air bubbles in them.	a. Syrup valves are clogged.	a. Disassemble and clean the syrup valves.
27.Mix low and mix out probes are not functioning.	a. Milkstone buildup in the hopper.	a. Clean hoppers thoroughly.

Table 9-1

Part Description	Every 3 Months	Every 6 Months	Annually
Scraper Blade-Shake		X	
Driveshaft Seal	X		
Freezer Door O-ring-Shake	X		
Front Bearing	X		
Draw Valve O-ring	X		
Spinner Shaft Seal-Shake	X		
Pivot Pin O-ring	X		
Restrictor Cap-Shake	X		
Mix Feed Tube O-ring	X		
Pump O-Ring	X		
Mix Inlet Tube O-ring	X		
Mix Feed Tube Check Ring	X		
Air Inlet Fitting Seal	X		
Pump Driveshaft O-ring	X		
Pump Valve Gasket	X		
Brush A.-Package-HT-SS		Inspect and replace when necessary.	Minimum

Notes:

Section 10 Limited Warranty on Equipment

TAYLOR COMPANY LIMITED WARRANTY ON FREEZERS

Taylor Company is pleased to provide this limited warranty on new Taylor-branded freezer equipment available from Taylor (the Product) to the original purchaser only.

LIMITED WARRANTY

Taylor warrants the Product against failure due to defect in materials or workmanship under normal use and service as follows. All warranty periods begin on the date of original Product installation. If a part fails due to defect during the applicable warranty period Taylor, through an authorized Taylor distributor or service agency, will provide a new or remanufactured part, at Taylor's option, to replace the failed defective part at no charge for the part.

Table 10-1

Product	Part	Limited Warranty Period
Soft Serve	Insulated shell assembly	Five (5) years
Shakes	Refrigeration compressor (except service valve)	Five (5) years
	Beater motors	Two (2) years
	Beater drive gear	Two (2) years
	Printed circuit boards	Two (2) years
	Parts not otherwise listed in this table or excluded below	One (1) years

In addition, during the one (1) year period commencing on the date of original installation of the Product, Taylor will also provide, through an authorized Taylor distributor or service agency, all service needed to replace the failed defective part at no charge for the service. Local sales and use taxes may still apply and will be charged accordingly.

Except as otherwise stated herein, these are Taylor's exclusive obligations under this limited warranty for a Product failure. This limited warranty is subject to all provisions, conditions, limitations, and exclusions listed below and on the reverse (if any) of this document.

LIMITED WARRANTY CONDITIONS

1. If the date of original installation of the Product cannot be verified, then the limited warranty period begins ninety (90) days from the date of Product manufacture (as indicated by the Product serial number). Proof of purchase may be required at time of service.
2. This limited warranty is valid only if the Product is installed and all required service work on the Product is performed by an authorized Taylor distributor or service agency, and only if genuine, new Taylor parts are used.
3. Installation, use, care, and maintenance must be normal and in accordance with all instructions contained in the Taylor Operator's Manual.
4. Defective parts must be returned to the authorized Taylor distributor or service agency for credit.
5. The use of any refrigerant other than that specified on the Product's data label will void this limited warranty.

LIMITED WARRANTY EXCEPTIONS

This limited warranty does **not** cover:

1. Except as otherwise specifically set forth in this limited warranty, labor or other costs incurred for diagnosing, repairing, removing, installing, shipping, servicing, or handling of defective parts, replacement parts, or new Products.
2. Normal maintenance, cleaning, and lubrication as outlined in the Taylor Operator's Manual, including cleaning of condensers.
3. Replacement of wear items designated as Class "000" parts in the Taylor Operator's Manual.
4. External hoses, electrical power supplies, and machine grounding.
5. Parts not supplied or designated by Taylor, or damages resulting from their use.
6. Return trips or waiting time required because a service technician is prevented from beginning warranty service work promptly upon arrival.
7. Failure, damage, or repairs due to faulty installation, misapplication, abuse, no or improper servicing, unauthorized alteration, or improper operation or use as indicated in the Taylor Operator's Manual, including but not limited to the failure to use proper assembly and cleaning techniques, tools, or approved cleaning supplies.
8. Failure, damage, or repairs due to theft, vandalism, wind, rain, flood, high water, water, lightning, earthquake, or any other natural disaster, fire, corrosive environments, insect or rodent infestation, or other casualty, accident or condition beyond the reasonable control of Taylor; operation above or below the electrical or water supply specification of the Product; or components repaired or altered in any way so as, in the judgment of the Manufacturer, to adversely affect performance, or normal wear or deterioration.
9. Any Product purchased over the Internet.
10. Failure to start due to voltage conditions, blown fuses, open circuit breakers, or damages due to the inadequacy or interruption of electrical service.
11. Electricity or fuel costs, or increases in electricity or fuel costs from any reason whatsoever.
12. Damages resulting from the use of any refrigerant other than that specified on the Product's data label will void this limited warranty.
13. **ANY SPECIAL, INDIRECT, OR CONSEQUENTIAL PROPERTY OR COMMERCIAL DAMAGE OF ANY NATURE WHATSOEVER.** Some jurisdictions do not allow the exclusion of incidental or consequential damages, so this limitation may not apply to you.

This limited warranty gives you specific legal rights, and you may also have other rights which vary from jurisdiction to jurisdiction.

LIMITATION OF WARRANTY

THIS LIMITED WARRANTY IS EXCLUSIVE AND IS IN LIEU OF ALL OTHER WARRANTIES, CONDITIONS, AND/OR REMEDIES UNDER THE LAW, INCLUDING ANY IMPLIED WARRANTIES OR CONDITIONS OF MERCHANTABILITY OR FITNESS FOR A PARTICULAR PURPOSE. THE ORIGINAL OWNER'S SOLE REMEDY WITH RESPECT TO ANY PRODUCTS SHALL BE REPAIR OR REPLACEMENT OF DEFECTIVE COMPONENTS UNDER THE TERMS OF THIS LIMITED WARRANTY. ALL RIGHTS TO CONSEQUENTIAL OR INCIDENTAL DAMAGES (INCLUDING CLAIMS FOR LOST SALES, LOST PROFITS, PRODUCT LOSS, PROPERTY DAMAGES, OR SERVICE EXPENSES) ARE EXPRESSLY EXCLUDED. THE EXPRESS WARRANTIES MADE IN THIS LIMITED WARRANTY MAY NOT BE ALTERED, ENLARGED, OR CHANGED BY ANY DISTRIBUTOR, DEALER, OR OTHER PERSON, WHATSOEVER.

LEGAL REMEDIES

The owner must notify Taylor in writing, by certified or registered letter to the following address, of any defect or complaint with the Product, stating the defect or complaint and a specific request for repair, replacement, or other correction of the Product under warranty, mailed at least thirty (30) days before pursuing any legal rights or remedies.

Taylor Company
750 N. Blackhawk Blvd.
Rockton, IL 61072, U.S.A.

Notes:

Section 11: Limited Warranty on Parts

TAYLOR COMPANY LIMITED WARRANTY ON TAYLOR GENUINE PARTS

Taylor Company is pleased to provide this limited warranty on new Taylor genuine replacement components and parts available from Taylor to the market generally (the Parts) to the original purchaser only.

LIMITED WARRANTY

Taylor warrants the Parts against failure due to defect in materials or workmanship under normal use and service as follows. All warranty periods begin on the date of original installation of the Part in the Taylor unit. If a Part fails due to defect during the applicable warranty period, Taylor, through an authorized Taylor distributor or service agency, will provide a new or remanufactured Part, at Taylor's option, to replace the failed defective Part at no charge for the Part. Except as otherwise stated herein, these are Taylor's exclusive obligations under this limited warranty for a Part failure. This limited warranty is subject to all provisions, conditions, limitations, and exclusions listed below and on the reverse (if any) of this document.

Table 11-1

Parts Warranty Class Code Or Part	Limited Warranty Period
Class 103 Parts[1]	Three (3) Months
Class 212 Parts[2]	Twelve (12) Months
Class 512 Parts	Twelve (12) Months
Class 000 Parts	No Warranty

LIMITED WARRANTY CONDITIONS

1. If the date of original installation of the Part cannot be otherwise verified, proof of purchase may be required at time of service.
2. This limited warranty is valid only if the Part is installed and all required service work in connection with the Part is performed by an authorized Taylor distributor or service agency.
3. The limited warranty applies only to Parts remaining in use by their original owner at their original installation location in the unit of original installation.
4. Installation, use, care, and maintenance must be normal and in accordance with all instructions contained in the Taylor Operator's Manual.
5. Defective Parts must be returned to the authorized Taylor distributor or service agency for credit.
6. This warranty is not intended to shorten the length of any warranty coverage provided pursuant to a separate Taylor Limited Warranty on freezer or grill equipment.
7. The use of any refrigerant other than that specified for the unit in which the Part is installed will void this limited warranty.

[1, 2] Except that Taylor Part #032129SER2 (Compressor-Air-230V SERV) and Taylor Part #075506SER1 (Compressor-Air-115V 60HZ) shall have a limited warranty period of twelve (12) months when used in Taylor freezer equipment and a limited warranty period of two (2) years when used in Taylor grill equipment.

LIMITED WARRANTY EXCEPTIONS

This limited warranty does **not** cover:

1. Labor or other costs incurred for diagnosing, repairing, removing, installing, shipping, servicing, or handling of defective Parts, replacement Parts, or new Parts.
2. Normal maintenance, cleaning, and lubrication as outlined in the Taylor Operator's Manual, including cleaning of condensers or carbon and grease buildup.
3. Required service, whether cleaning or general repairs, to return the cooking surface assemblies, including the upper platen and lower plate, to an operational condition to achieve proper cooking or allow proper assembly of release sheets and clips as a result of grease buildup on the cooking surfaces, including but not limited to the platen and plate, sides of the shroud or top of the shroud.
4. Replacement of cooking surfaces, including the upper platen and lower plate, due to pitting or corrosion (or in the case of the upper platen, due to loss of plating) as a result of damage due to the impact of spatulas or other small wares used during the cooking process or as a result of the use of cleaners, cleaning materials, or cleaning processes not approved for use by Taylor.
5. Replacement of wear items designated as Class "000" Parts in the Taylor Operator's Manual, as well as any release sheets and clips for the Product's upper platen assembly.
6. External hoses, electrical power supplies, and machine grounding.
7. Parts not supplied or designated by Taylor, or damages resulting from their use.
8. Return trips or waiting time required because a service technician is prevented from beginning warranty service work promptly upon arrival.
9. Failure, damage, or repairs due to faulty installation, misapplication, abuse, no or improper servicing, unauthorized alteration, or improper operation or use as indicated in the Taylor Operator's Manual, including but not limited to the failure to use proper assembly and cleaning techniques, tools, or approved cleaning supplies.
10. Failure, damage, or repairs due to theft, vandalism, wind, rain, flood, high water, water, lightning, earthquake, or any other natural disaster, fire, corrosive environments, insect or rodent infestation, or other casualty, accident or condition beyond the reasonable control of Taylor; operation above or below the gas, electrical, or water supply specification of the unit in which a part is installed; or Parts or the units in which they are installed repaired or altered in any way so as, in the judgment of Taylor, to adversely affect performance, or normal wear or deterioration.
11. Any Part purchased over the Internet.
12. Failure to start due to voltage conditions, blown fuses, open circuit breakers, or damages due to the inadequacy or interruption of electrical service.
13. Electricity, gas, or other fuel costs, or increases in electricity or fuel costs from any reason whatsoever.
14. Damages resulting from the use of any refrigerant other than that specified for the unit in which the Part is installed will void this limited warranty.
15. Any cost to replace, refill, or dispose of refrigerant, including the cost of refrigerant.
16. **ANY SPECIAL, INDIRECT, OR CONSEQUENTIAL PROPERTY OR COMMERCIAL DAMAGE OF ANY NATURE WHATSOEVER.** Some jurisdictions do not allow the exclusion of incidental or consequential damages, so this limitation may not apply to you.

This limited warranty gives you specific legal rights, and you may also have other rights which vary from jurisdiction to jurisdiction.

LIMITATION OF WARRANTY

THIS LIMITED WARRANTY IS EXCLUSIVE AND IS IN LIEU OF ALL OTHER WARRANTIES, CONDITIONS, AND/OR REMEDIES UNDER THE LAW, INCLUDING ANY IMPLIED WARRANTIES OR CONDITIONS OF MERCHANTABILITY OR FITNESS FOR A PARTICULAR PURPOSE. THE ORIGINAL OWNER'S SOLE REMEDY WITH RESPECT TO ANY PRODUCTS SHALL BE REPAIR OR REPLACEMENT OF DEFECTIVE PARTS UNDER THE TERMS OF THIS LIMITED WARRANTY. ALL RIGHTS TO CONSEQUENTIAL OR INCIDENTAL DAMAGES (INCLUDING CLAIMS FOR LOST SALES, LOST PROFITS, PRODUCT LOSS, PROPERTY DAMAGES, OR SERVICE EXPENSES) ARE EXPRESSLY EXCLUDED. THE EXPRESS WARRANTIES MADE IN THIS LIMITED WARRANTY MAY NOT BE ALTERED, ENLARGED, OR CHANGED BY ANY DISTRIBUTOR, DEALER, OR OTHER PERSON, WHATSOEVER.

LEGAL REMEDIES

The owner **must** notify Taylor in writing, by certified or registered letter to the following address, of any defect or complaint with the Part, stating the defect or complaint and a specific request for repair, replacement, or other correction of the Part under warranty, mailed at least thirty (30) days before pursuing any legal rights or remedies.

Taylor Company
750 N. Blackhawk Blvd.
Rockton, IL 61072, U.S.A.

Notes: