Quality Refrigeration

CATALOG OF REPLACEMENT PARTS

TU SERIES UNDERCOUNTER

REFRIGERATORS

TU044HT
TU072HT
TU100HT

FREEZERS

TU044LT
TU072LT

4401 BLUE MOUND RD. • FT. WORTH, TX 76106 • 1-800-825-8220

FORM F43211 Rev. A (August 2010)

TABLE OF CONTENTS

3	CONTROL BOX
5	DOOR
7	PANELS AND RACKS
9	CONDENSER AND COMPRESSOR
11	EVAPORATOR
12	DRAWER ASSEMBLY

 © TRAULSEN 2010

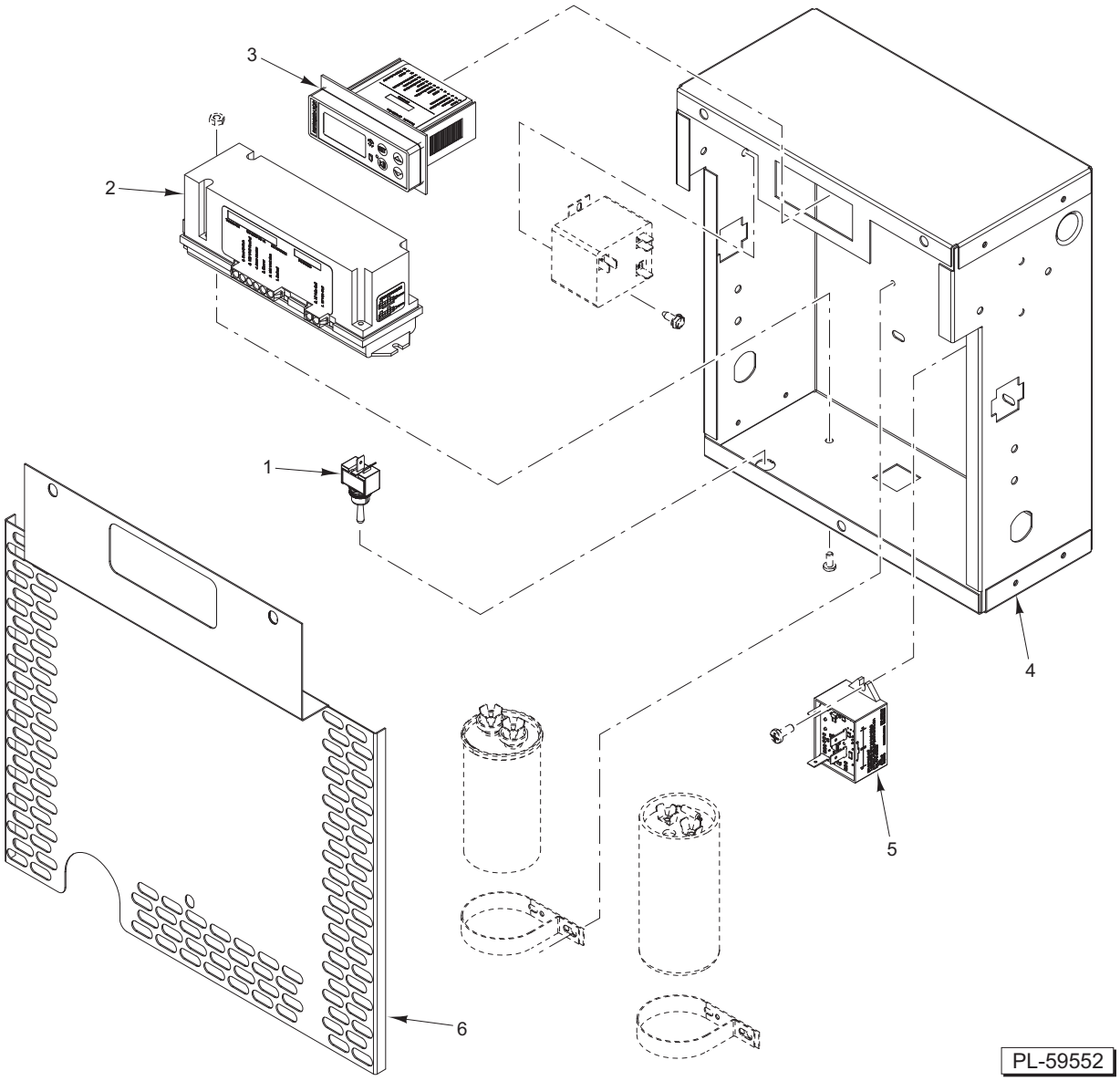

CONTROL BOX

ILLUS. PL-59552	PART NO.	NAME OF PART	AMT.
1	337-60346-00	Switch – Toggle (S.P.S.T.) (20 Amp., 1.5 Hp.)	1
2	337-60317-00	Relay – Module (115 VAC)	1
3	337-60403-00	Control Head Assy.	1
4	701-61225-00	Box – Junction	1
5	337-60360-01	Relay – Hybrid (With Surge Damper)	1
6	701-61226-00	Cover – Junction Box	1
	329-60061-14	Heater – Harness (Foil 92 In., 220 V.)	1
	329-60061-04	Heater – Harness (Foil 92 In., 115 V.)	1
	329-60061-06	Heater – Harness (Foil 92 In., 115 V.) (Freezer Units Only)	1
	377-60038-00	Clip – Mounting	2
	337-60070-00	Horn	1
	337-60317-01	Relay – Module (230 VAC)	1

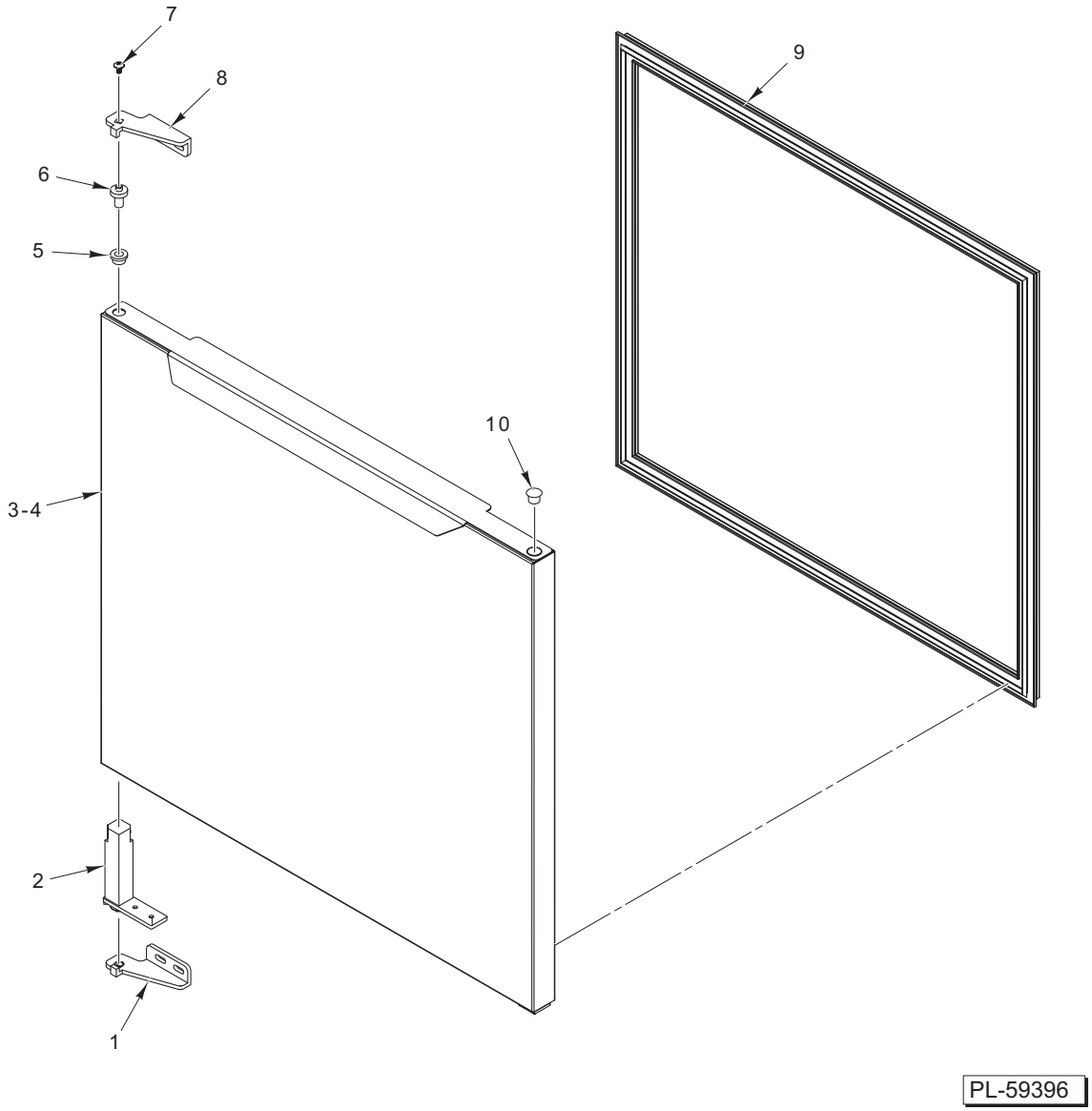

DOOR

DOOR

ILLUS. PL-59396	PART NO.	NAME OF PART	AMT.
1	282545	Hinge Plate (Lower LH, Upper RH)	1
2	282543	Hinge – Cartridge	1
3	200-60550-01	Door Assy. (Hinged Right)	1
4	200-60550-00	Door Assy. (Hinged Left)	1
5	358-10042-00	Bushing – Door Stop	2
6	358-10037-00	Pin – Hinge Pivot (Upper)	2
7	SA-021-37	Mach. Screw 10-32 x 5/16 Phil. Rd. Hd.	2
8	282544	Hinge Plate (Lower RH, Upper LH)	1
9	341-60197-00	Gasket – Snap	1
10	335-12491-02	Plug – Snap-In (1/2 In.)	1

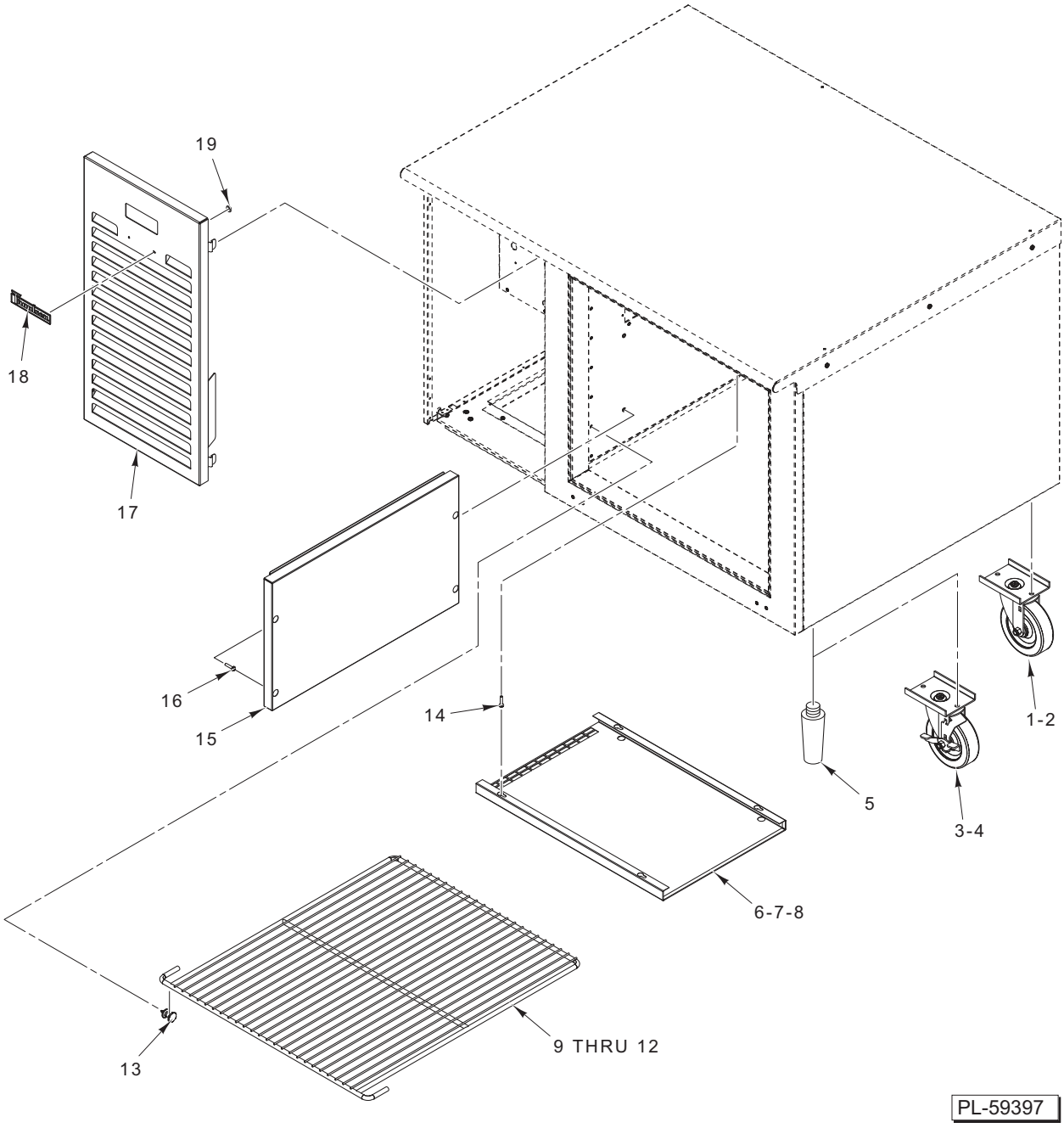

PANELS AND RACKS

PANELS AND RACKS

ILLUS. PL-59397	PART NO.	NAME OF PART	AMT.
1	SER-60536-00	Caster – Adjustable (4 In.) (No Lock)	1
2	SER-60538-00	Caster – Adjustable (6 In.) (No Lock)	1
3	SER-60536-01	Caster – Adjustable (4 In.) (With Lock)	1
4	SER-60538-01	Caster – Adjustable (6 In.) (With Lock)	1
5	SER-60542-00	Leg (6 In.)	AR
6	614-60155-00	Duct – Air (TU044)	1
7	614-60156-00	Duct – Air (TU072)	1
8	614-60157-00	Duct – Air (TU100)	1
9	340-60230-01	Shelf (TU044)	AR
10	340-60231-02	Shelf (Left Side) (TU072 & TU100)	AR
11	340-60231-03	Shelf (Right Side) (TU072 & TU100)	AR
12	340-60232-01	Shelf (Center) (TU100)	AR
13	344-24759-02	Pin – Shelf	AR
14	351-60001-00	Mach. Screw 1/4-20 x 3/4 Phil. Hd.	AR
15	614-60158-00	Duct – Return Air	1
16	351-60001-00	Mach. Screw 1/4-20 x 3/4 Phil. Hd.	AR
17	500-70081-00	Panel – Louver	1
18	370-09735-00	Logo – Traulsen	1
19	356-12950-00	Nut – Self-Clinching	2

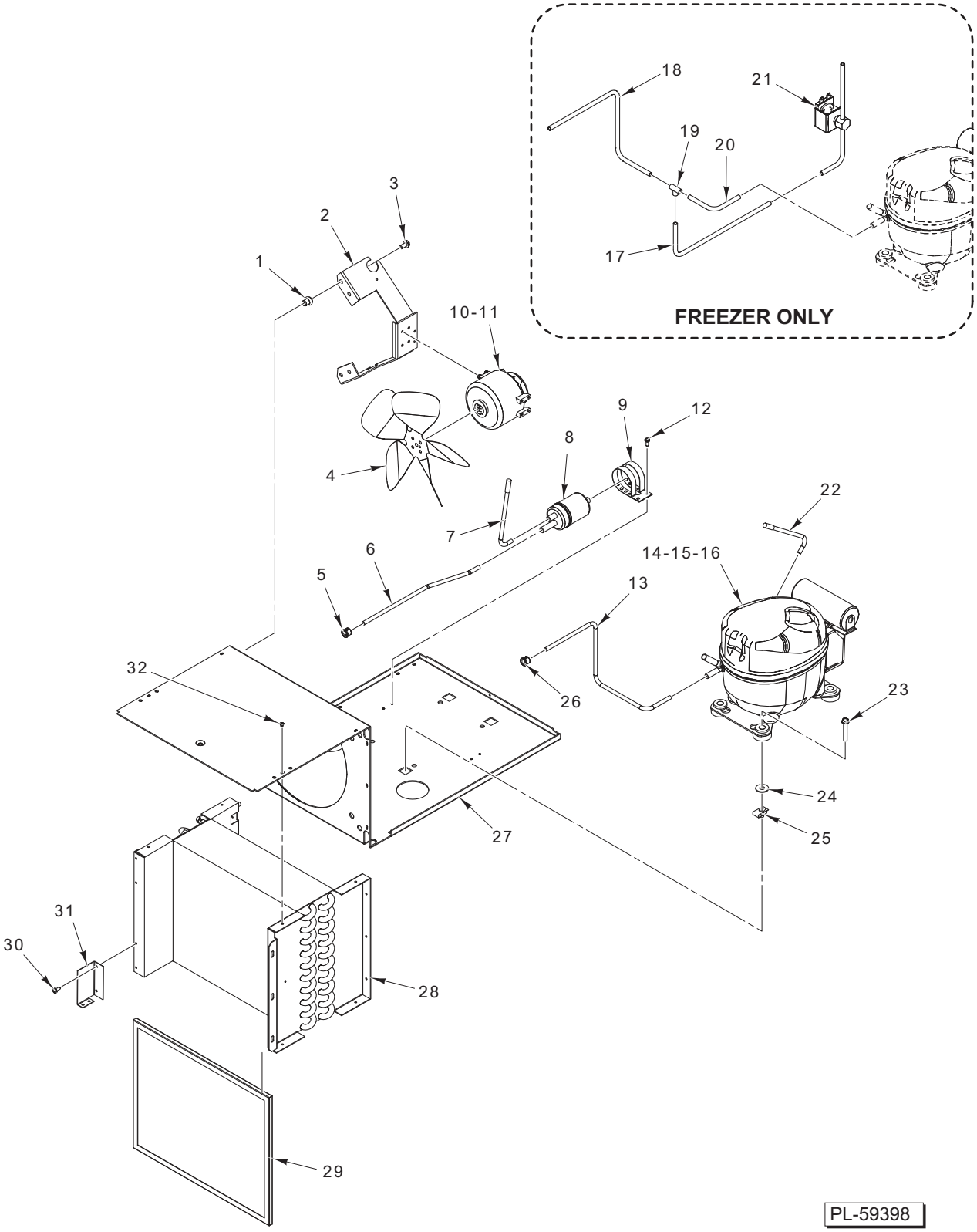

CONDENSER AND COMPRESSOR

CONDENSER AND COMPRESSOR

ILLUS. PL-59398	PART NO.	NAME OF PART	AMT.
1	356-60024-00	Insert 1/4-20 Rivnut	4
2	510-10305-00	Bracket – Condenser (Fan Motor)	1
3	351-25542-03	Mach. Screw 1/4-20 x 1/2 Hex Washer Hd.	4
4	325-60135-00	Blade – Fan (8.75 In.)	1
5	334-12213-04	Bushing – Snap	1
6	326-60372-00	Tubing (Condenser Outlet to Drier Inlet)	1
7	326-60270-00	Tubing (6 In. Process) (1/4 O.D.)	2
8	325-60103-00	Drier	1
9	701-60796-00	Bracket – Filter Drier	1
10	338-60050-01	Motor (16 W., 220 V.)	1
11	338-60050-00	Motor (16 W., 115 V.)	1
12	351-60003-02	Self-Tapping Screw 8-18 x 1/2 Phil. Hd.	2
13	326-60374-00	Tubing (Compressor to Condenser Inlet) (Refrigerator Units Only)	1
14	321-60225-01	Compressor (220 V.) (Refrigerator Units Only)	1
15	321-60225-00	Compressor (115 V.) (Refrigerator Units Only)	1
16	321-60204-00	Compressor (115 V.) (Freezer Units Only)	1
17	326-60416-00	Tubing (Tee to Hot Gas Valve) (Freezer Units Only)	1
18	326-60417-00	Tubing (Tee to Condenser Inlet) (Freezer Units Only)	1
19	326-13087-02	Tee (Copper) (Freezer Units Only)	1
20	326-60415-00	Tubing (Compressor to Tee) (Freezer Units Only)	1
21	325-60001-00	Solenoid – Valve (120/50-60) (1/4 O.D.) (Freezer Units Only)	1
22	326-60270-00	Tubing (6 In. Process) (1/4 O.D.)	2
23	351-25542-09	Cap Screw 5/16-18 x 1 1/2 Hex Hd.	4
24	355-60019-00	Washer	4
25	356-60034-00	Nut – Clip	4
26	334-12213-04	Bushing – Snap	1
27	701-61174-00	Base – Condenser System	1
28	322-60049-00	Condenser – Coil Fin	1
29	341-60062-05	Air Filter (13 x 10.5)	1
30	351-60003-02	Self-Tapping Screw 8-18 x 1/2 Phil. Hd.	2
31	510-10388-00	Bracket	1
32	358-10000-00	Rivet 1/8	AR
	000-98268-00	Instructions – Coil Sensor Location	1
	333-60378-00	Cord – Power (15 Amp. 115 V. 5-15P)	1
	337-60405-02	Sensor – Cabinet Temperature (74 In. Lg.)	1
	337-60406-02	Sensor – Coil Temperature (74 In. Lg.)	1
	337-60407-02	Sensor – Liquid Line Temperature (74 In. Lg.)	1

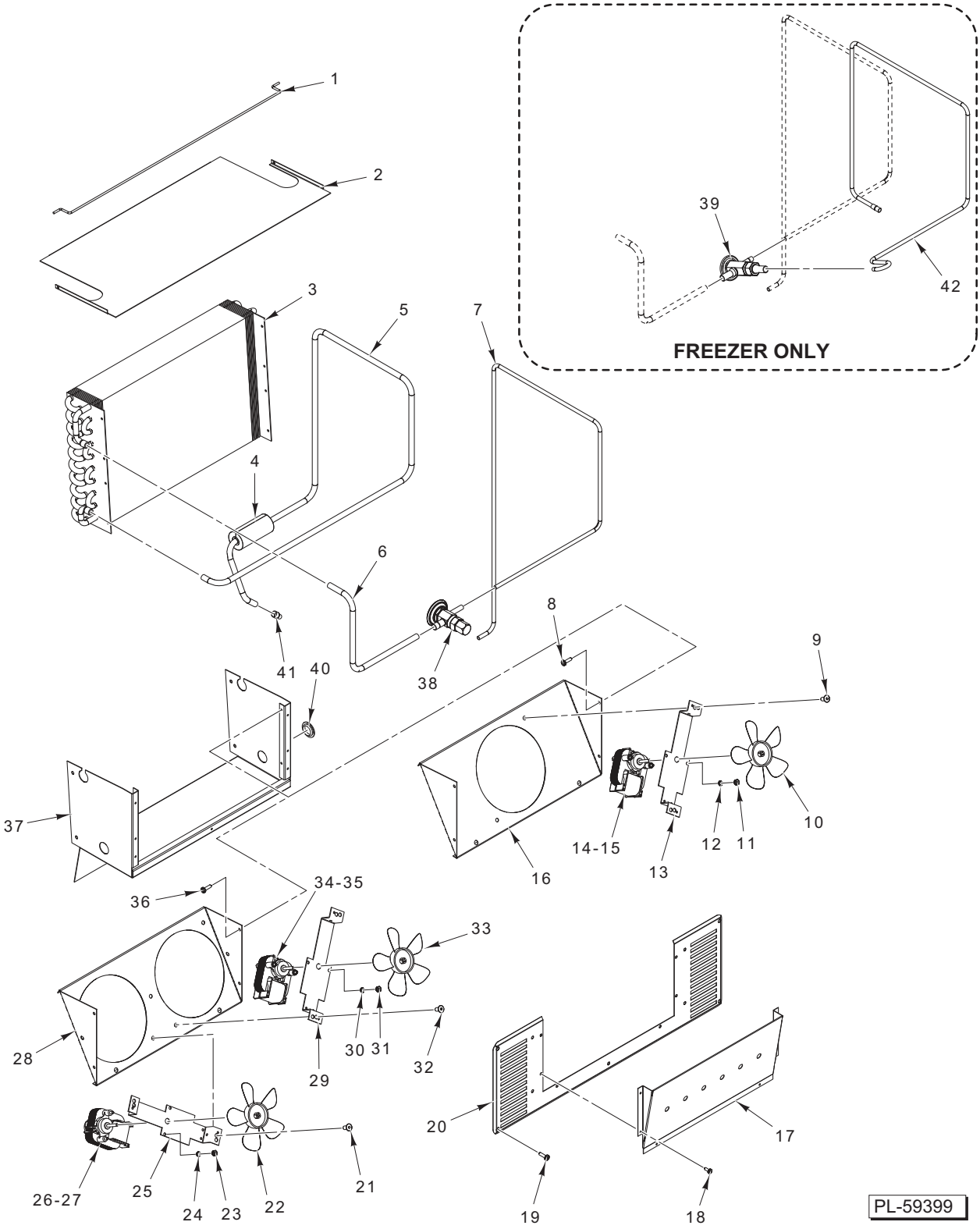
1
2
3
4
5
6
7
8
9
10
11
12
13
14-15
16
17
18
19
20
21
22
23
24
25
26-27
28
29
30
31
32
33
34-35
36
37
38
39
40
41
42
FREEZER ONLY
PL-59399

EVAPORATOR

EVAPORATOR

ILLUS. PL-59399	PART NO.	NAME OF PART	AMT.
1	701-61119-02	Clip – Spring	1
2	614-60147-00	Cover – Top Evaporator	1
3	322-60054-00	Coil – Evaporator	1
4	327-60003-01	Insulation	AR
5	326-60421-00	Tubing (Suction Line)	1
6	326-60422-00	Tubing (Evaporator Coil To TXV Valve)	1
7	326-60411-00	Tubing (Drier Outlet To Liquid Line)	1
8	351-60003-01	Self-Tapping Screw 10 x 3/4 Phil. Hd.	4
9	358-10003-00	Rivet 1/8	2
10	433090	Blade – Fan (Plastic)	1
11	356-12942-00	Nut 8-32 Hex (SST)	2
12	WL-007-07	Lockwasher #8 External Shakeproof	2
13	701-60837-00	Bracket – Fan Motor	1
14	338-60054-01	Motor – Fan (230 V.)	1
15	338-60054-00	Motor – Fan (115 V.)	1
16	614-60160-00	Panel – Single Fan	1
17	614-60154-00	Duct – Transition	1
18	351-60003-02	Self-Tapping Screw 8-18 x 1/2 Phil. Hd.	4
19	351-60001-12	Mach. Screw 10-32 x 3/4 Slotted Hd.	4
20	614-60153-00	Baffle – Air	1
21	358-10003-00	Screw	2
22	433090	Blade – Fan (Plastic)	1
23	356-12942-00	Nut 8-32 Hex (SST)	2
24	WL-007-07	Lockwasher #8 External Shakeproof	2
25	701-60837-00	Bracket – Fan Motor	1
26	338-60054-01	Motor – Fan (230 V.)	1
27	338-60054-00	Motor – Fan (115 V.)	1
28	614-60159-00	Panel – Double Fan	1
29	701-60837-00	Bracket – Fan Motor	1
30	WL-007-07	Lockwasher #8 External Shakeproof	2
31	356-12942-00	Nut 8-32 Hex (SST)	2
32	358-10003-00	Screw	2
33	433090	Blade – Fan (Plastic)	1
34	338-60054-01	Motor – Fan (230 V.)	1
35	338-60054-00	Motor – Fan (115 V.)	1
36	351-60003-01	Self-Tapping Screw 10 x 3/4 Phil. Hd.	4
37	614-60144-00	Divider – Coil	1
38	325-60080-08	TXV Valve (Refrigerator Units Only)	1
39	325-60080-30	TXV Valve (Freezer Units Only)	1
40	335-12491-00	Cap	AR
41	326-37048-00	Reducer	1
42	326-60418-00	Tubing (Hot Gas Loop to TXV Valve) (Freezer Units Only)	1

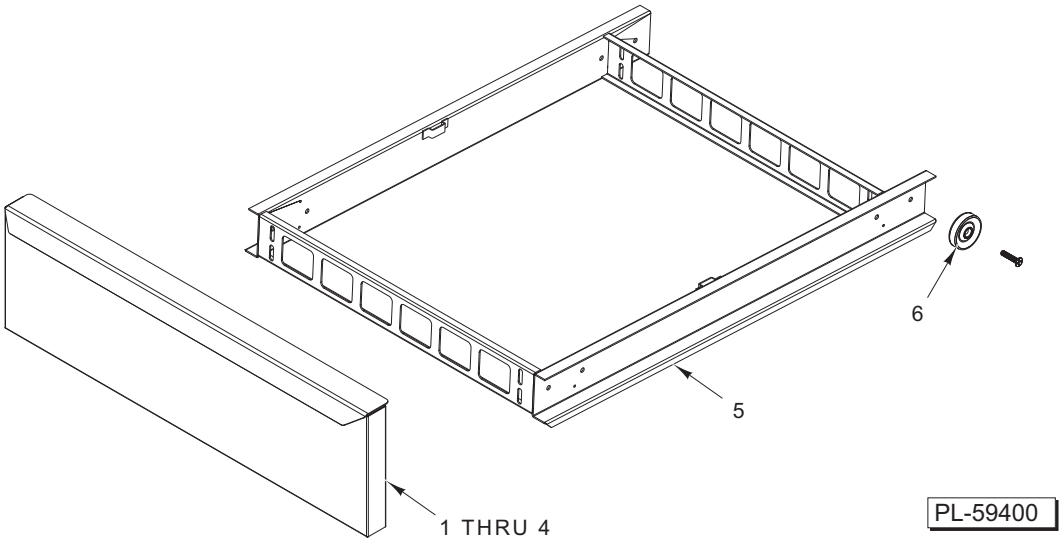

DRAWER ASSEMBLY

ILLUS. PL-59400	PART NO.	NAME OF PART	AMT.
1	550-10114-00	Drawer Face Assy. (2 Drawers, 6 In. Deep Pan)	1
2	341-60176-07	Gasket – Drawer (2 Drawers, 6 In. Deep Pan)	1
3	550-10099-00	Drawer Face Assy. (3 Drawers, 4 In. Deep Pan)	1
4	341-60176-06	Gasket – Drawer (3 Drawers, 4 In. Deep Pan)	1
5	550-10104-00	Drawer Frame Assy.	1
6	344-60155-00	Roller – Drawer	AR
	550-10108-00	Drawer Assy. (2 Drawers, 6 In. Deep Pan) (Incls. Items 1, 2, 5, 6, & Frame Insert)	1
	550-10098-00	Drawer Assy. (3 Drawers, 4 In. Deep Pan) (Incls. Items 3 thru 6 & Frame Insert)	1
	SER-60539-00	Drawer Frame Insert (2 Drawers, 6 In. Deep Pan)	1
	SER-60541-00	Drawer Frame Insert (3 Drawers, 4 In. Deep Pan)	1