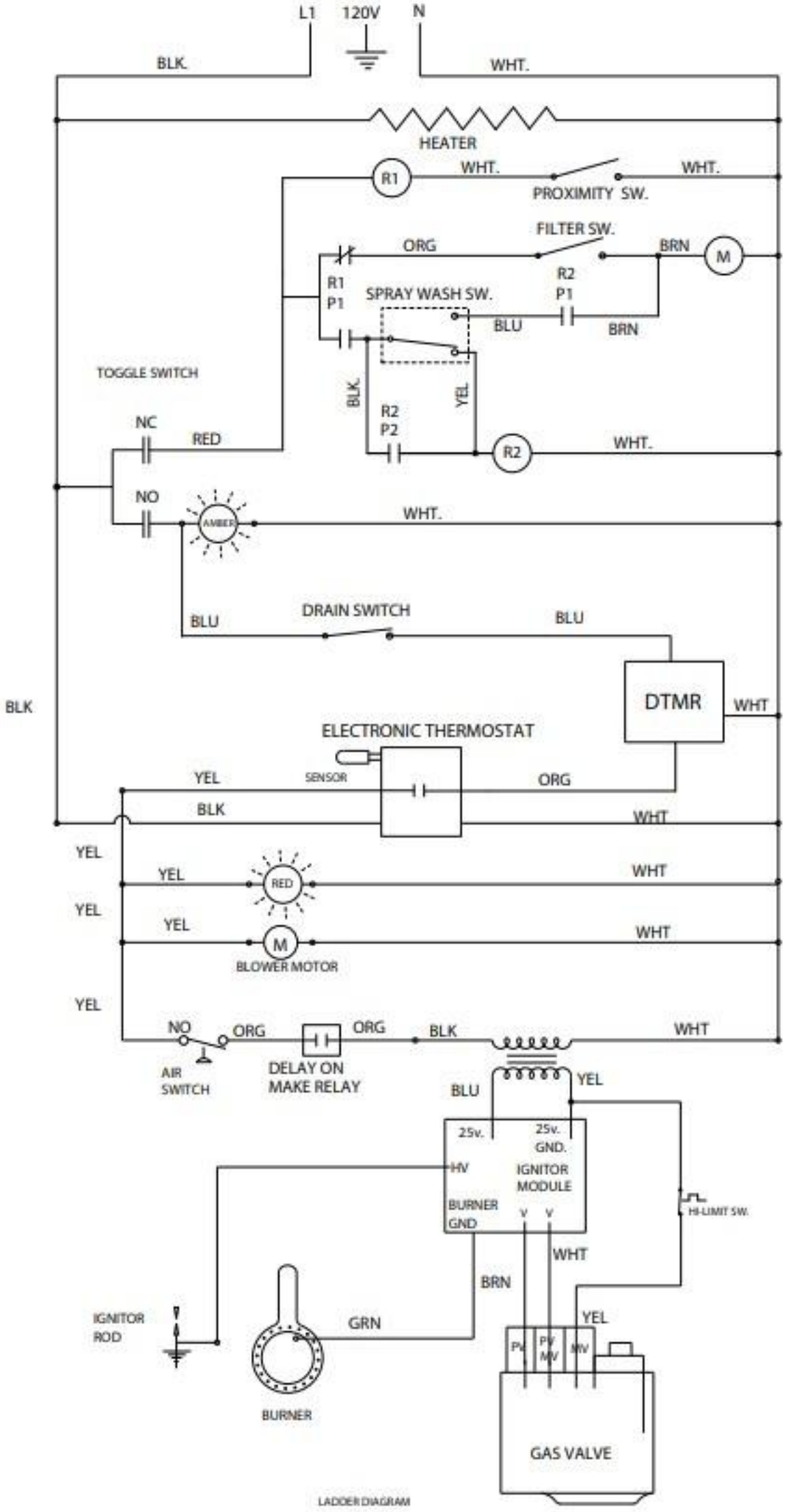

LADDER DIAGRAM