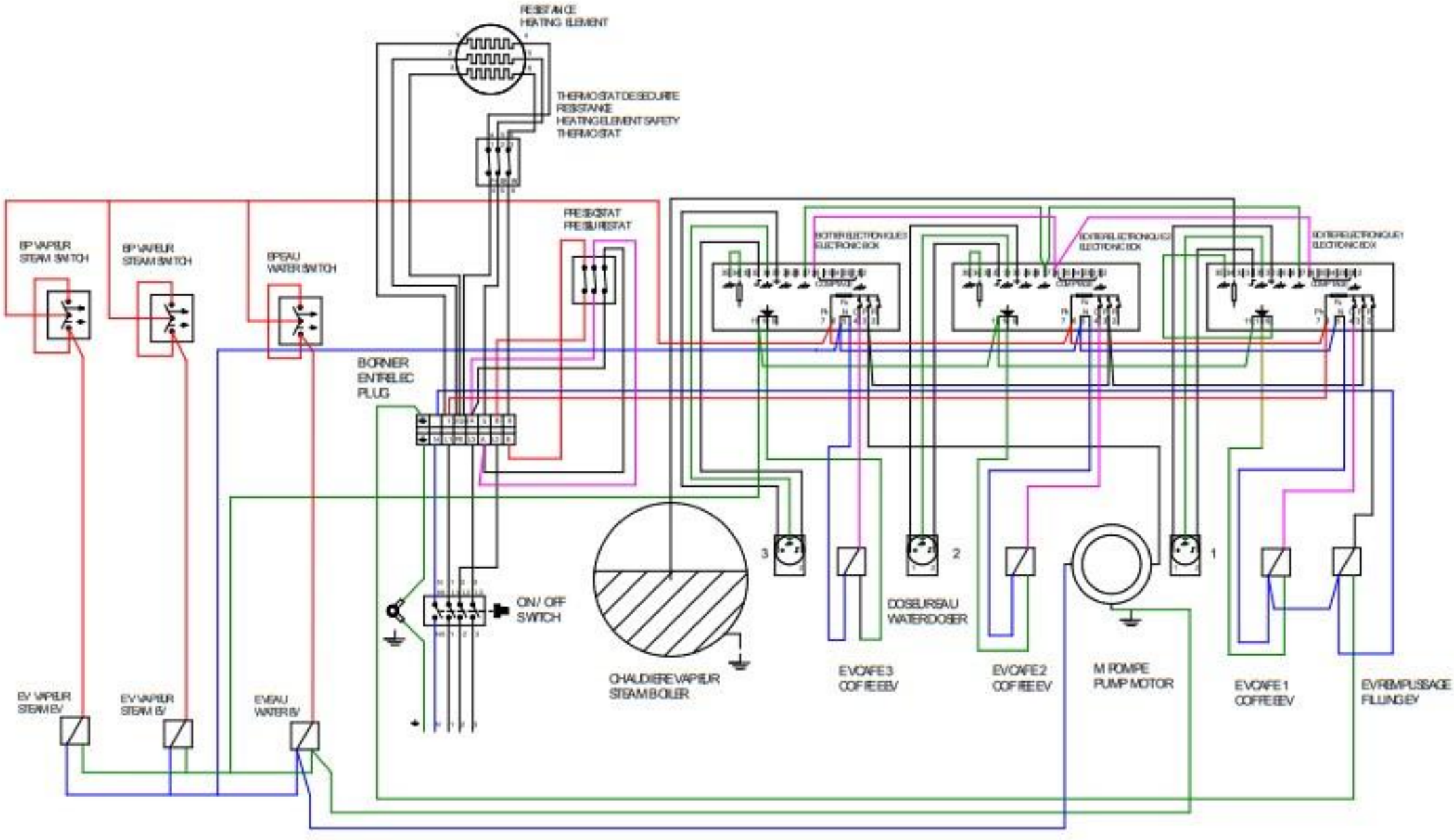
RESISTANCE
HEATING ELEMENT
THERMOSTAT DE SECURITE
RESISTANCE
HEATING ELEMENT SAFETY
THERMOSTAT
BP VAPEUR
STEAM SWITCH
BP VAPEUR
STEAM SWITCH
BP EAU
WATER SWITCH
PRESSOSTAT
PRESSURESTAT
BOITIER ELECTRONIQUE
ELECTRONIC BOX
BOITIER ELECTRONIQUE
ELECTRONIC BOX
BOITIER ELECTRONIQUE
ELECTRONIC BOX
BORNIER
ENTRELEC
PLUG
ON / OFF
SWITCH
CHAUDIERE VAPEUR
STEAM BOILER
3
2
1
DOSEUR EAU
WATER DOSER
EV CAFE 3
COFFEE EV
EV CAFE 2
COFFEE EV
M POMPE
PUMP MOTOR
EV CAFE 1
COFFEE EV
EV REMPLISSAGE
FILLING EV
EV VAPEUR
STEAM EV
EV VAPEUR
STEAM EV
EV EAU
WATER EV

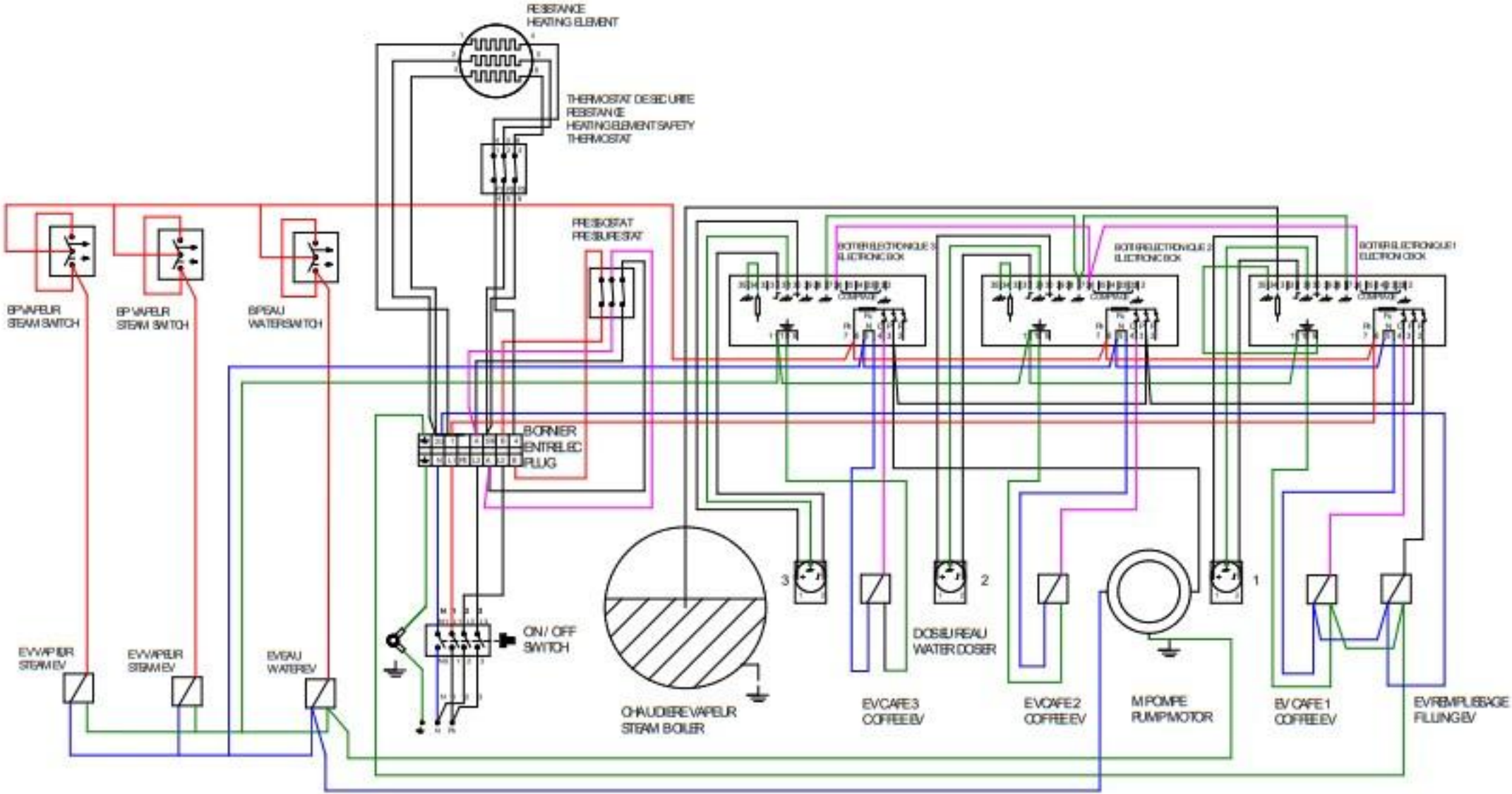
RESISTANCE
HEATING ELEMENT
THERMOSTAT DE SECURITE
RESISTANCE
HEATING ELEMENT SAFETY
THERMOSTAT
PRESSOSTAT
PRESSURESTAT
BP VAPEUR
STEAM SWITCH
BP VAPEUR
STEAM SWITCH
BP EAU
WATER SWITCH
BOITIER ELECTRONIQUE 3
ELECTRONIC BOX
BOITIER ELECTRONIQUE 2
ELECTRONIC BOX
BOITIER ELECTRONIQUE 1
ELECTRONIC BOX
BORNIER
ENTREE EC
PLUG
ON / OFF
SWITCH
EV VAPEUR
STEAM EV
EV VAPEUR
STEAM EV
EV EAU
WATER EV
CHAUDIERE VAPEUR
STEAM BOILER
DOSEUR EAU
WATER DOSER
EV CAFE 3
COFFEE EV
EV CAFE 2
COFFEE EV
M POMPE
PUMP MOTOR
EV CAFE 1
COFFEE EV
EV REMPLISSAGE
FILLING EV
3
2
1

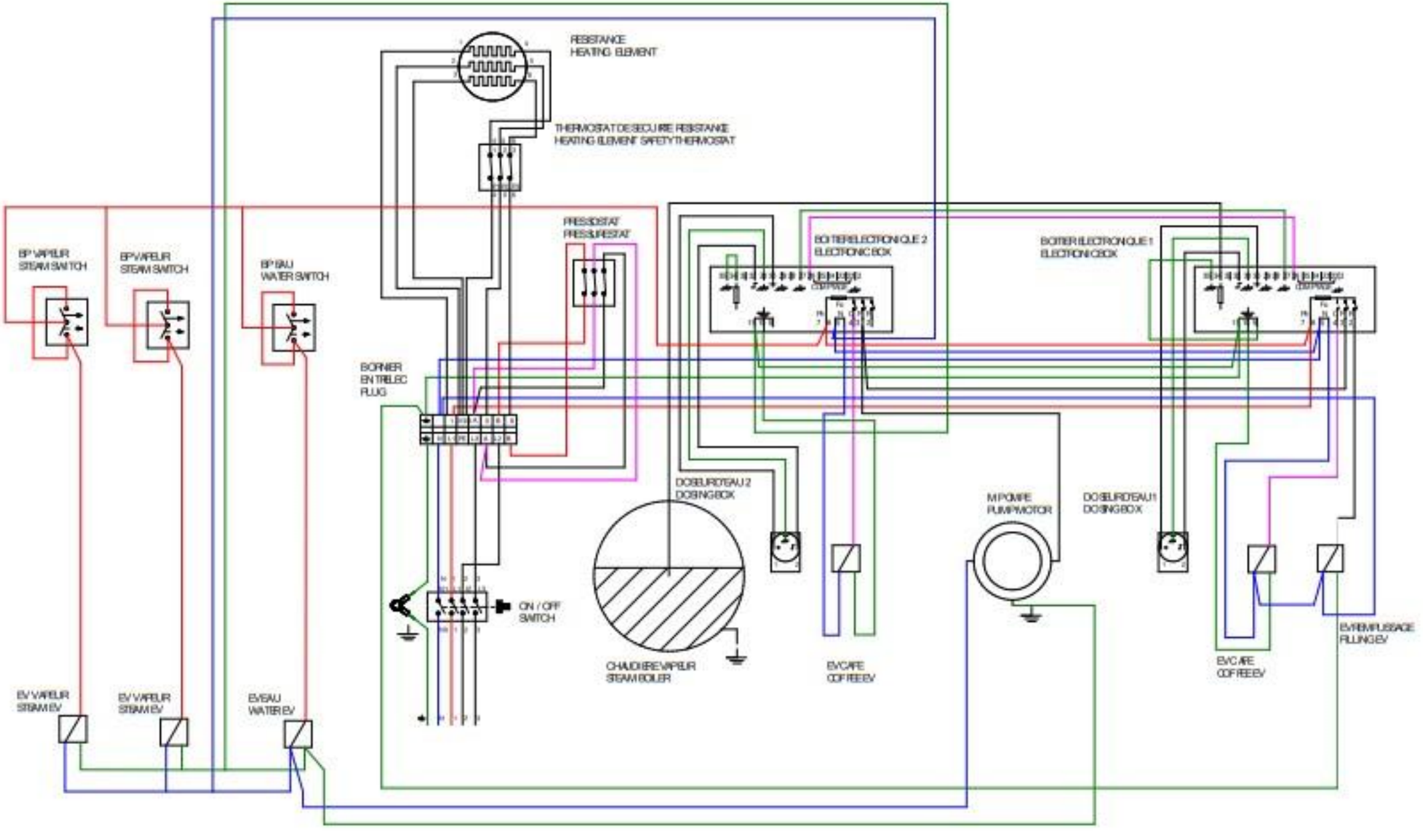
RESISTANCE
HEATING ELEMENT
THERMOSTAT DE SECURITE RESISTANCE
HEATING ELEMENT SAFETY THERMOSTAT
BP VAPEUR
STEAM SWITCH
BP VAPEUR
STEAM SWITCH
BP EAU
WATER SWITCH
PRESSOSTAT
PRESSURESTAT
BOITIER ELECTRONIQUE 2
ELECTRONIC BOX
BOITIER ELECTRONIQUE 1
ELECTRONIC BOX
BORNIER
ENTRELEC
PLUG
DOSEUR D'EAU 2
DOSING BOX
MIPOMPE
PUMP MOTOR
DOSEUR D'EAU 1
DOSING BOX
ON / OFF
SWITCH
CHAUDIERE VAPEUR
STEAM BOILER
EV CAFE
COFFEE EV
EV CAFE
COFFEE EV
EV REMPLISSAGE
FILLING EV
EV VAPEUR
STEAM EV
EV VAPEUR
STEAM EV
EV EAU
WATER EV

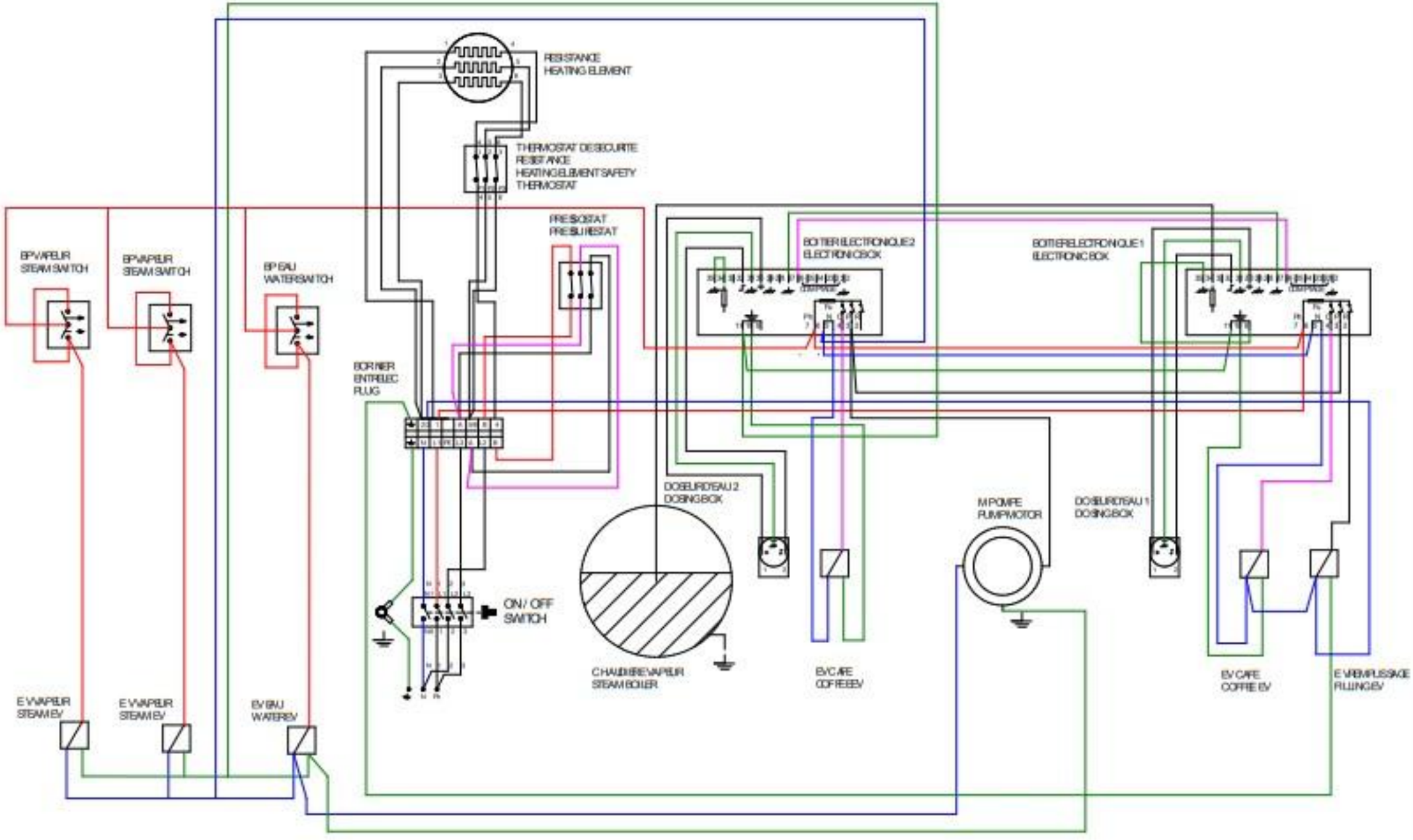
RESISTANCE
HEATING ELEMENT
THERMOSTAT DE SECURITE
RESISTANCE
HEATING ELEMENT SAFETY
THERMOSTAT
PRESSOSTAT
PRESSUREST AT
BP VAPEUR
STEAM SWITCH
BP VAPEUR
STEAM SWITCH
BP EAU
WATER SWITCH
BORNIER
ENTREE EC
PLUG
BOITIER ELECTRONIQUE 2
ELECTRONIC BOX
BOITIER ELECTRONIQUE 1
ELECTRONIC BOX
DOSEUR D'EAU 2
DOSING BOX
M POMPE
PUMP MOTOR
DOSEUR D'EAU 1
DOSING BOX
ON / OFF
SWITCH
CHAUDIERE VAPEUR
STEAM BOILER
EV CAFE
COFFEE EV
EV CAFE
COFFEE EV
EV REMPLISSAGE
FILLING EV
EV VAPEUR
STEAM EV
EV VAPEUR
STEAM EV
EV EAU
WATER EV

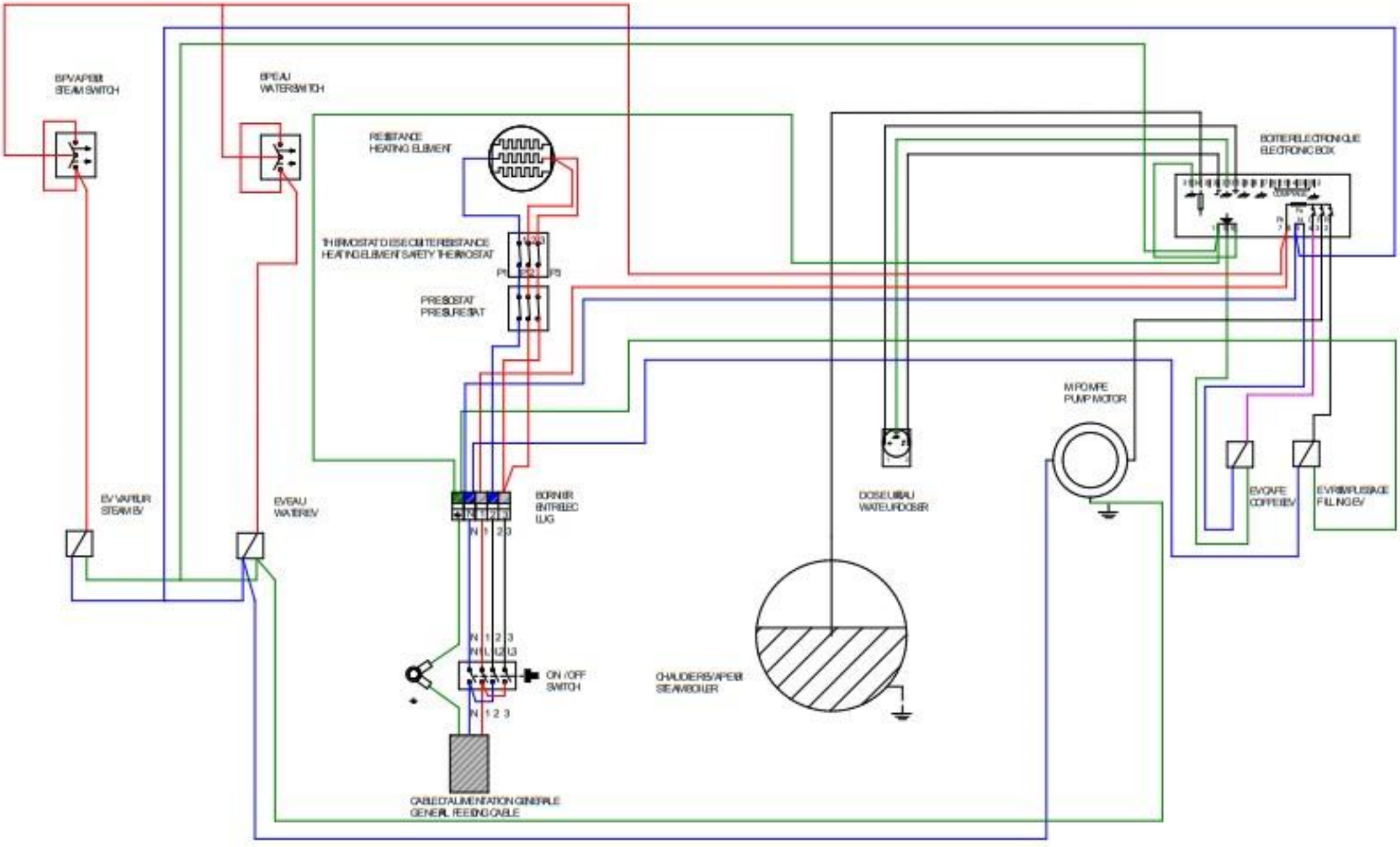
BP/VAPEUR
STEAM SWITCH
BP/EAU
WATER SWITCH
RESISTANCE
HEATING ELEMENT
THERMOSTAT DE SECURITE RESISTANCE
HEATING ELEMENT SAFETY THERMOSTAT
PRESSOSTAT
PRESSURESTAT
BOITIER ELECTRONIQUE
ELECTRONIC BOX
M POMPE
PUMP MOTOR
EV VAPEUR
STEAM EV
EV EAU
WATER EV
BORNIER
ENTREE EC
LUG
DOSE UNIT EAU
WATER DOSER
EV CAFE
COFFEE EV
EV REMPLISSAGE
FILLING EV
ON /OFF
SWITCH
CHAUDIERE VAPEUR
STEAM BOILER
CABLE D'ALIMENTATION GENERALE
GENERAL FEEDING CABLE