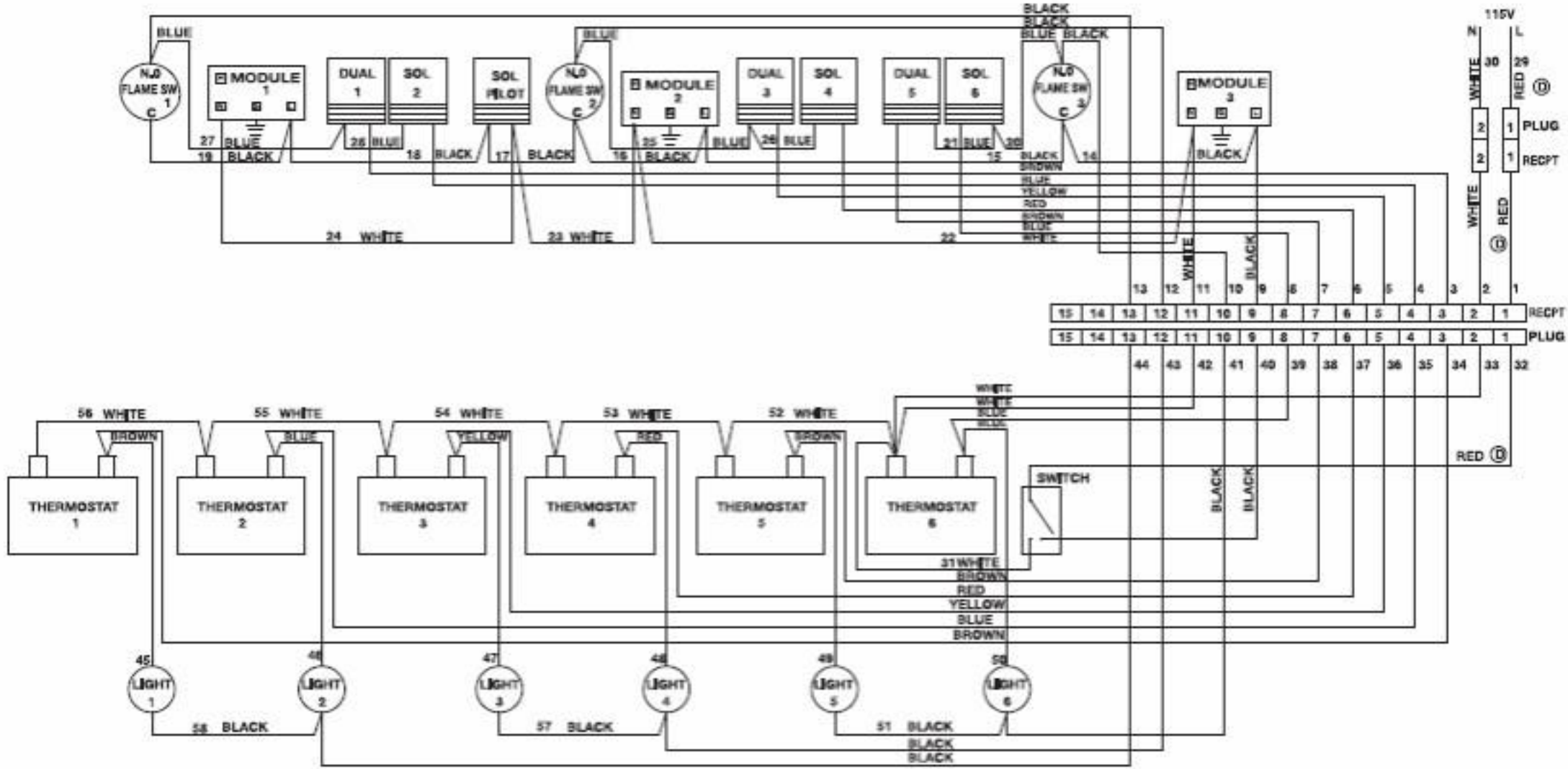
115V
N
L
WHITE
RED
PLUG
RECPT
MODULE 1
MODULE 2
MODULE 3
DUAL 1
SOL 2
SOL PILOT
DUAL 3
SOL 4
DUAL 5
SOL 6
NLO FLAME SW 1
NLO FLAME SW 2
NLO FLAME SW 3
BLUE
BLACK
WHITE
BROWN
YELLOW
RED
THERMOSTAT 1
THERMOSTAT 2
THERMOSTAT 3
THERMOSTAT 4
THERMOSTAT 5
THERMOSTAT 6
SWITCH
LIGHT 1
LIGHT 2
LIGHT 3
LIGHT 4
LIGHT 5
LIGHT 6

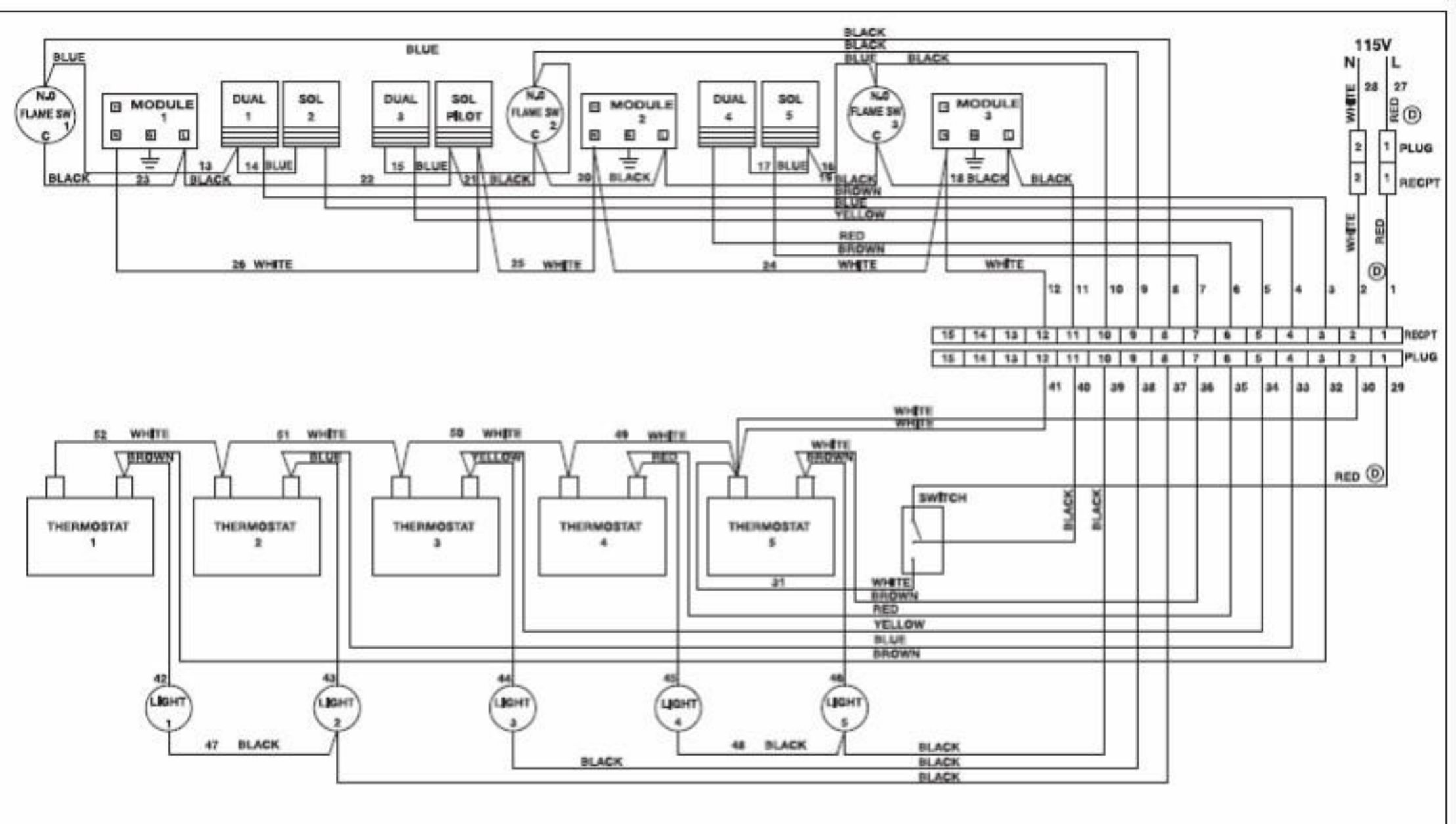
115V
N
L
PLUG
RECPT
MODULE 1
MODULE 2
MODULE 3
DUAL 1
SOL 2
DUAL 3
SOL PILOT
DUAL 4
SOL 5
NJ FLAME SW 1
NJ FLAME SW 2
NJ FLAME SW 3
THERMOSTAT 1
THERMOSTAT 2
THERMOSTAT 3
THERMOSTAT 4
THERMOSTAT 5
SWITCH
LIGHT 1
LIGHT 2
LIGHT 3
LIGHT 4
LIGHT 5
BLUE
BLACK
WHITE
BROWN
RED
YELLOW

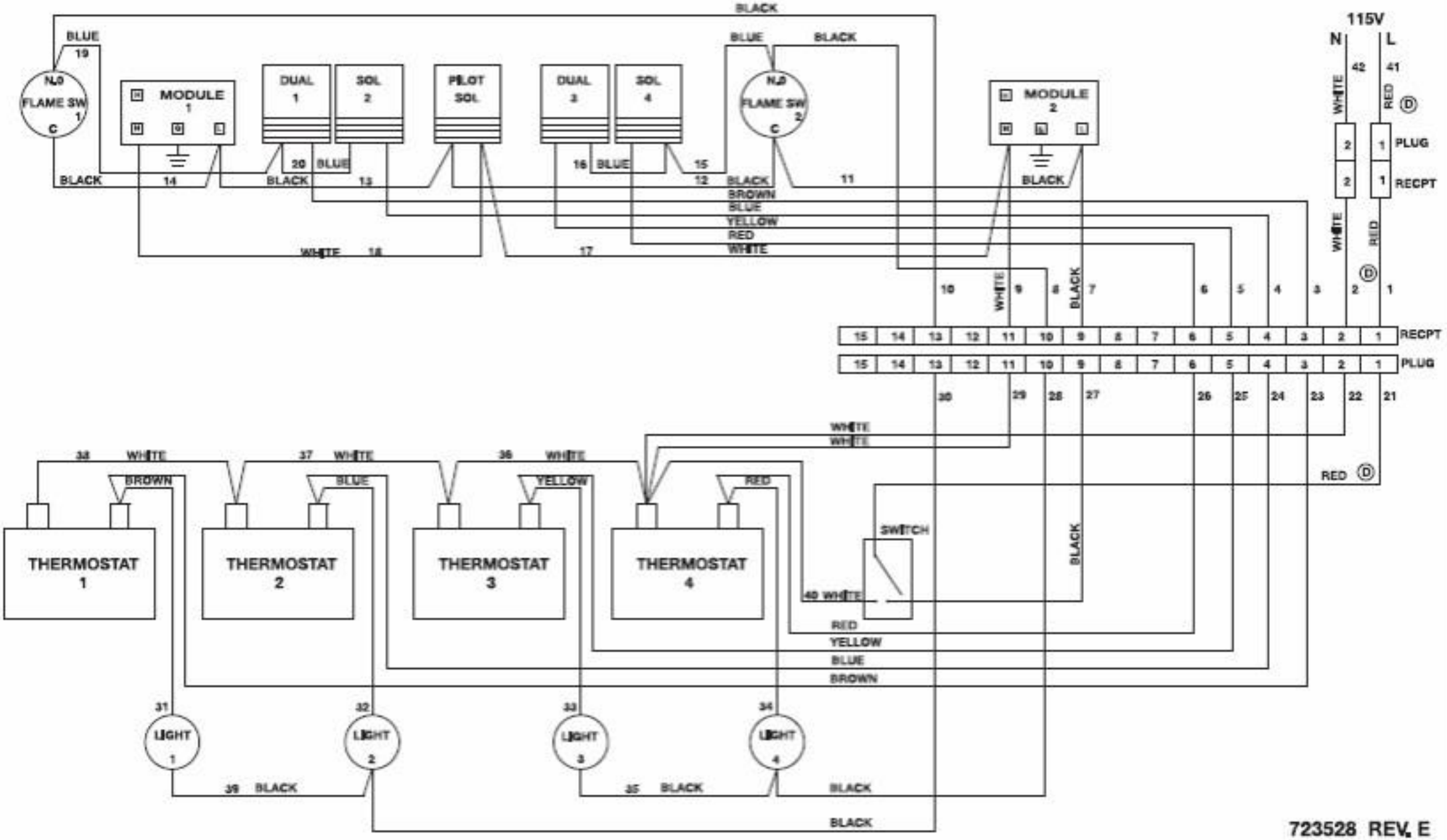
BLACK
BLUE
19
N.O
FLAME SW
1
C
MODULE
1
DUAL
1
SOL
2
PILOT
SOL
DUAL
3
SOL
4
N.O
FLAME SW
2
C
MODULE
2
115V
N
L
42
41
WHITE
RED
PLUG
RECPT
20
BLUE
16
BLUE
15
14
13
12
11
BROWN
BLUE
YELLOW
RED
WHITE
18
17
10
9
8
7
6
5
4
3
2
1
RECPT
PLUG
30
29
28
27
26
25
24
23
22
21
38
37
36
40
THERMOSTAT
1
THERMOSTAT
2
THERMOSTAT
3
THERMOSTAT
4
SWITCH
LIGHT
1
LIGHT
2
LIGHT
3
LIGHT
4
31
32
33
34
39
35
723528 REV. E

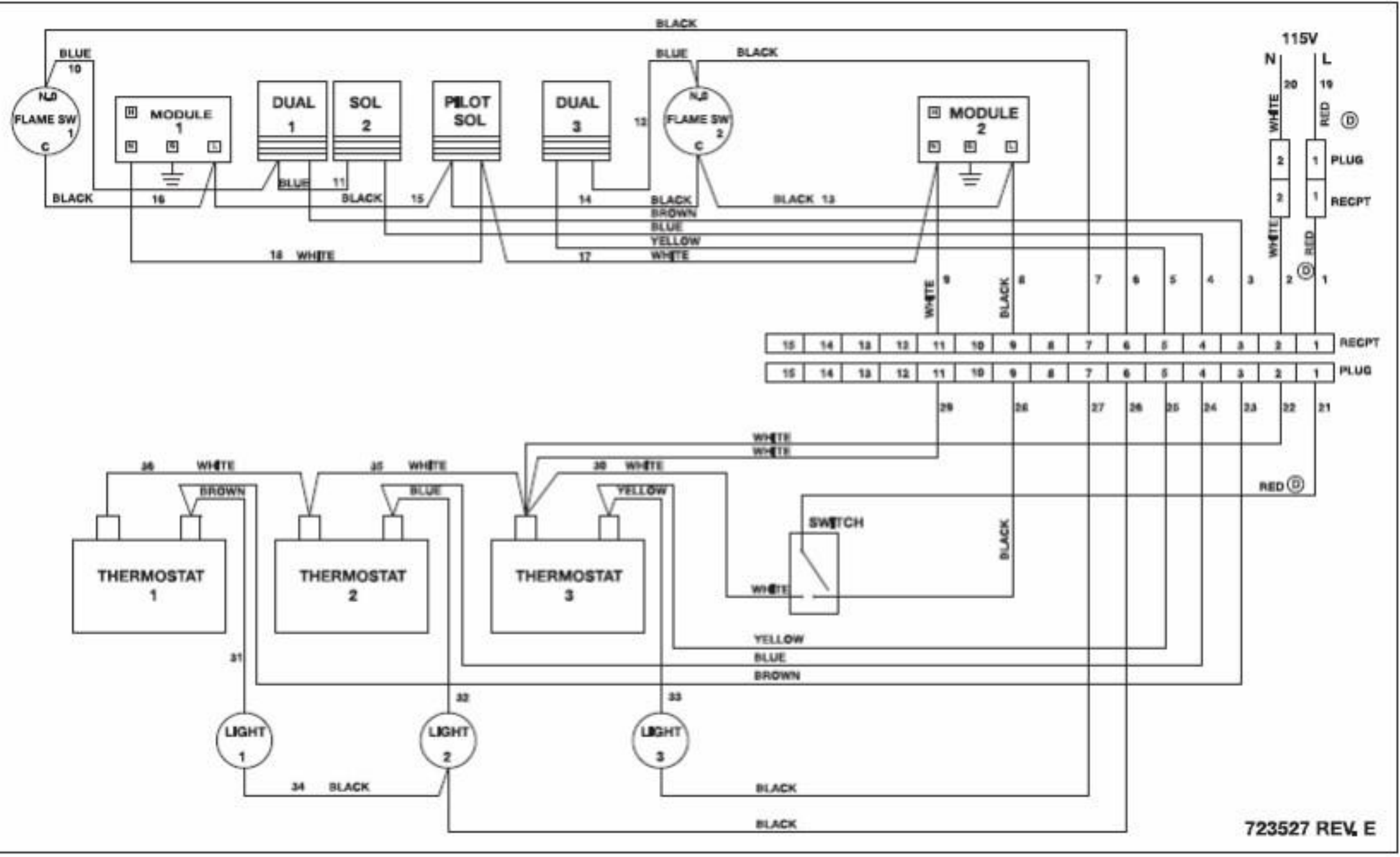
BLACK
BLUE
10
FLAME SW 1
C
MODULE 1
DUAL 1
SOL 2
PILOT SOL
DUAL 3
BLUE
BLACK
12
FLAME SW 2
C
MODULE 2
115V
N
L
20
19
WHITE
RED
PLUG
RECPT
BLACK
16
BLUE
11
BLACK
15
14
BLACK
BROWN
BLUE
YELLOW
WHITE
BLACK 13
18 WHITE
17
WHITE
BLACK
9
8
7
6
5
4
3
2
1
15 14 13 12 11 10 9 8 7 6 5 4 3 2 1
RECPT
PLUG
29
28
27
26
25
24
23
22
21
WHITE
WHITE
36 WHITE
35 WHITE
30 WHITE
BROWN
BLUE
YELLOW
RED
SWITCH
BLACK
THERMOSTAT 1
THERMOSTAT 2
THERMOSTAT 3
WHITE
YELLOW
BLUE
BROWN
31
32
33
LIGHT 1
LIGHT 2
LIGHT 3
34 BLACK
BLACK
BLACK
723527 REV. E

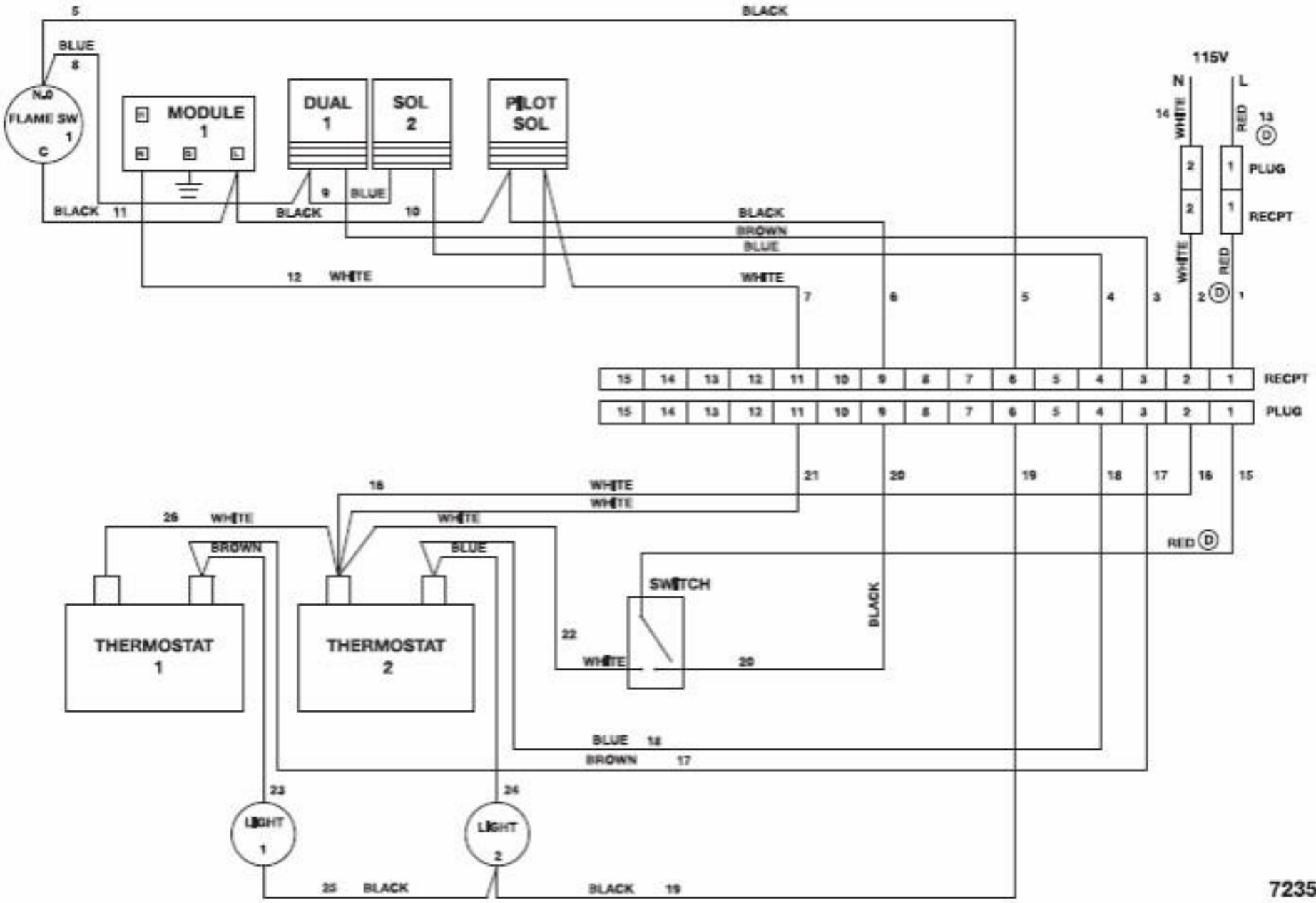
5
BLACK
BLUE
8
N.O
FLAME SW
1
C
MODULE
1
DUAL
1
SOL
2
PILOT
SOL
115V
N
L
14
WHITE
RED
13
D
PLUG
RECPT
9
BLUE
BLACK
11
BLACK
10
BLACK
BROWN
BLUE
12
WHITE
WHITE
7
6
5
4
3
2
D
1
RECPT
PLUG
21
20
19
18
17
16
15
16
WHITE
WHITE
26
WHITE
WHITE
BROWN
BLUE
RED
D
SWITCH
BLACK
THERMOSTAT
1
THERMOSTAT
2
22
WHITE
20
BLUE
18
BROWN
17
23
24
LIGHT
1
LIGHT
2
25
BLACK
BLACK
19
72352