INSTALLATION & OPERATION MANUAL

C24DA SERIES DIRECT STEAM CONVECTION STEAMERS



C24DA6	ML-152022-0000Z
C24DA10	ML-152023-0000Z

For additional information on Vulcan-Hart or to locate an authorized parts and service provider in your area, visit our website at www.vulcanhart.com.

VULCAN-HART
DIVISION OF ITW FOOD EQUIPMENT GROUP, LLC
3600 NORTH POINT BLVD.
BALTIMORE, MD 21222
WWW.VULCANEQUIPMENT.COM
1-800-814-2028
F37506 (01-12)

IMPORTANT FOR YOUR SAFETY

THIS MANUAL HAS BEEN PREPARED FOR PERSONNEL QUALIFIED TO INSTALL THIS EQUIPMENT, WHO SHOULD PERFORM THE INITIAL FIELD START-UP AND ADJUSTMENTS OF THE EQUIPMENT COVERED BY THIS MANUAL.

WARNING

IMPROPER INSTALLATION, ADJUSTMENT, ALTERATION, SERVICE OR MAINTENANCE CAN CAUSE PROPERTY DAMAGE, INJURY OR DEATH. READ THE INSTALLATION, OPERATING AND MAINTENANCE INSTRUCTIONS THOROUGHLY BEFORE INSTALLING OR SERVICING THIS EQUIPMENT.

IN THE EVENT OF A POWER FAILURE, DO NOT ATTEMPT TO OPERATE THIS DEVICE.

INTRODUCTION

GENERAL

Vulcan convection steamers are produced with quality workmanship and material. Proper installation, usage and maintenance will result in many years of satisfactory performance. It is suggested that you thoroughly read this entire manual and carefully follow all of the instructions provided.

The C24DA6 and C24DA10 convection steamers are dual compartment, direct steam pressureless steam cookers.

Model C24DA6 can accommodate three 2 1/2" deep (6.4 cm) steam pans per compartment. Model C24DA10 can accommodate five 2 1/2" deep (6.4 cm) steam pans per compartment. The C24DA6 and C24DA10 electric convection steamers are designed for cooking vegetables, eggs and other foods, in commercial kitchens. Each compartment has a 0-60 minute timer, as well as a constant steam feature. The buzzer requires manual shutoff. The steamer is equipped with a cabinet base with flanged feet for floor mounting.

INSTALLATION

Before installing, verify that the electrical supply agrees with the specifications on the data plate located on the front of the machine. If the supply and equipment requirements do not agree, do not proceed with the installation. Contact your dealer or Vulcan-Hart immediately.

This unit is shipped wired for 120/60/1 with a three prong plug. The unit will operate on 60 or 50 cycles.

UNPACKING

This steamer was inspected before leaving the factory. The transportation company assumes full responsibility for safe delivery upon acceptance of the shipment.

Immediately after unpacking, check for possible shipping damage. If steamer damage is found, save the packaging material and contact the carrier within 15 days of delivery.

INSTALLATION CODES AND STANDARDS

In the United States of America:

1. Local Codes
2. State Codes

Note: In the Commonwealth of Massachusetts:

All gas appliances vented through a ventilation hood or exhaust system equipped with a damper or with a power means of exhaust shall comply with 248 CMR.

3. Vapor Removal from Cooking Equipment, NFPA#96 (latest edition).
4. Copies may be obtained from The National Fire Protection Association, 1 Batterymarch Park, Quincy MA 02169-7471.
5. National Electrical Code, ANSI/NFPA-70 (latest edition). Copies may be obtained from The National Fire Protection Association, 1 Batterymarch Park, Quincy MA 02169-7471.

In Canada, the steamer must be installed in accordance with:

1. Local codes.
2. Canadian Electrical Code (CSA C22.2 No.3, latest edition) available from the Canadian Standards Association, 5060 Spectrum Way, Mississauga, Ontario, Canada L4W 5N6.

LOCATION

Allow space for plumbing and electrical connections. Minimum clearance is 6" (15.2 cm) on the back for proper air circulation. Allow adequate access for operating and servicing the steamer: 36" (91.4 cm) at the front of the steamer, 15" (38 cm) above the steamer and 18" (45.7 cm) on the right and left sides of the steamer.

LEVELING AND ANCHORING

Position the steamer in its final installed location. Place a level on the horizontal area of the cabinet. Adjust the feet to level the steamer in both the left-to-right and front-to-rear directions.

Steamers should be elevated in the front just enough, about 1/16" to 1/8" (2 to 3 mm), to provide proper draining. Do this by rotating the adjustable feet in the proper direction 1 to 1 1/2 turns after leveling. Check drainage in the steamer compartments by pouring a small amount of water in the compartment. All the water should drain.

The feet have holes in the flanges for anchor bolts.

ELECTRICAL CONNECTION

WARNING: ELECTRICAL AND GROUNDING CONNECTIONS MUST COMPLY WITH APPLICABLE PORTIONS OF THE NATIONAL ELECTRICAL CODE AND / OR OTHER LOCAL ELECTRICAL CODES.

The steamer is provided with a three prong 120/60/1 plug. It must be connected to a properly wired and grounded outlet.



WARNING: DISCONNECT THE ELECTRICAL POWER TO THE MACHINE AND FOLLOW LOCKOUT / TAGOUT PROCEDURES.

The wiring diagram is located inside the right cavity panel.

PLUMBING CONNECTIONS

WARNING: PLUMBING CONNECTIONS MUST COMPLY WITH APPLICABLE SANITARY, SAFETY AND PLUMBING CODES.

Water Supply Connection

Connect the untreated cold water supply line to the 3/4" (19 mm) (male hose thread) inlet marked UNTREATED WATER.

Steam Supply Connection

Connect a clean 10 to 50 PSI gauge steam supply to the ¾" NPT fitting on the rear of the unit.

Drain Connection

The 1 1/2" NPT threaded fitting on the condenser box must be extended a minimum of 12" (305 mm) - maximum of 72" (1829 mm) away from steamer base, to an open air gap type drain (see Figure 1). Do not reduce the 1 1/2" NPT drain piping throughout its length. Provide a suitable floor sink with a minimum depth of 12" (305 mm). The floor sink is NOT to be directly under the steamer and should be at a distance so that steam vapors will not enter the steamer from underneath. The drain should slope down away from the steamer 1/4" for every foot of drain pipe length. The drain pipe should be either iron or copper. DO NOT use PVC pipe; PVC pipe may lose its rigidity or glue may fail. A 1 1/2" air gap is required for the drain.

CAUTION: In order to avoid any back pressure in the steamer, do not make a solid connection to any drain. FAILURE TO DO SO CAN DAMAGE THE STEAMER AND VOIDS THE WARRANTY.

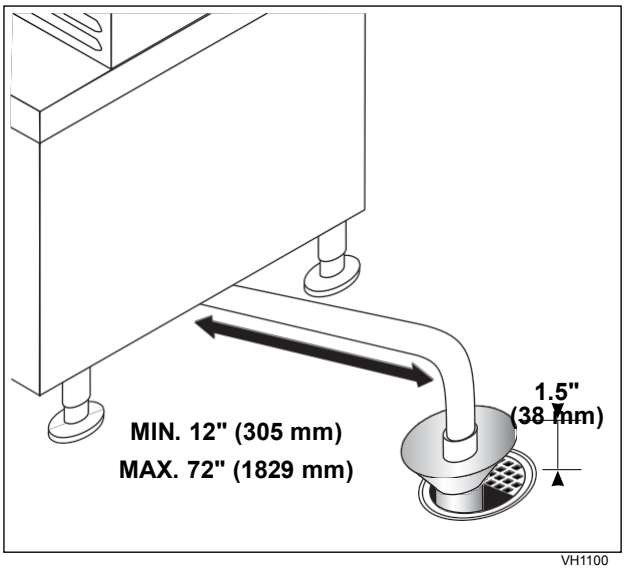

Figure 1

Temperatures in the drain can briefly reach as high as 212°F (100°C). Local codes may require that the temperature of drain water be no greater than 140°F (60°C). Some provision for lowering the water temperature must be provided by the user or installer to meet this code requirement.

VENT HOOD

Local codes may require the steamer to be located under an exhaust hood. Information on the construction and installation of ventilating hoods may be obtained from *Vapor Removal from Cooking Equipment,* NFPA standard No. 96 (latest edition).

STARTUP

WARNING: THE STEAMER AND ITS PARTS ARE HOT. USE CARE WHEN OPERATING, CLEANING OR SERVICING THE STEAMER. THE COOKING COMPARTMENT CONTAINS LIVE STEAM. STAY CLEAR WHILE OPENING DOOR.

Once the steamer is installed and all mechanical connections have been made, thoroughly test the steamer before operation.

1. Check that proper water, drain, and electrical connections have been made.
2. Press the power switch to the on position. After approximately 5 seconds, the ready light should come on.
3. Open the door, set the timer to 5 minutes, and observe that no steam is entering the compartment, and that the ready light is off and the cooking light is off.
4. Close the compartment door. The cooking and ready lights should now be lit, and steam should be heard entering the compartment.
5. Check the drain line to be sure that water from the cold water condensate valve is flowing through the drain line. See Note.
6. Open the compartment door and observe that steam supply to the compartment stops, and that the cooking light turns off.
7. Close the compartment door and let the cooking cycle finish. When the timer returns to the 0 position, a buzzer will sound and the cooking light will turn off, signaling the end of the cooking cycle. To silence the buzzer, turn the timer dial to the OFF position.
8. Complete steps 3-7 for each cooking compartment.
9. Press the power switch to the off position. Leave the compartment doors slightly open to allow the inside to dry out.

Note: The drain condinsate water does not flow till the drain box reaches 140°F.

OPERATION

WARNING: THE STEAMER AND ITS PARTS ARE HOT. USE CARE WHEN OPERATING, CLEANING OR SERVICING THE STEAMER. THE COOKING COMPARTMENT CONTAINS LIVE STEAM. STAY CLEAR WHILE OPENING DOOR.

CONTROLS AND INDICATORS

The upper section of the steamer consists of two cooking compartments. Each compartment functions independently with its own controls (see Figure 2), and is a separate, sealed steam chamber during the cooking operation.

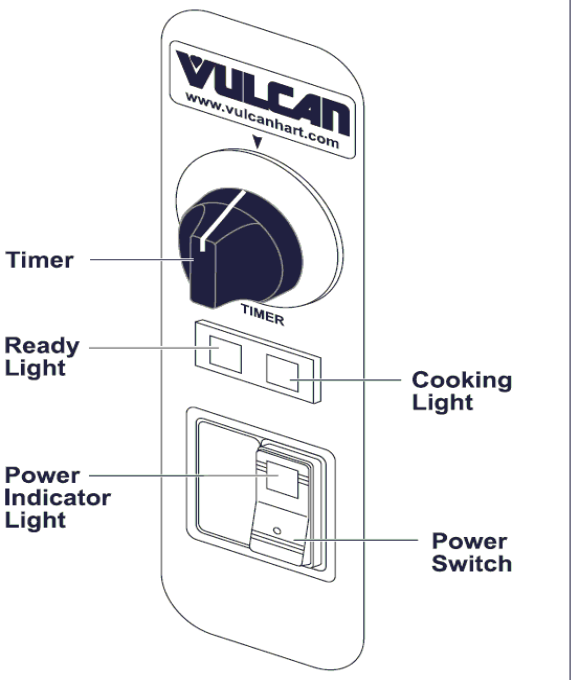

Note: Upper Compartment Control Panel does not contain a Power Switch or Power Indicator Light.

Timer
Used to set desired cooking cycle time. Timer range is 0-60 minutes or constant steam. Turn to the OFF position to silence the buzzer.

READY Light (Green)
When lit, indicates steamer is ready for the cooking cycle.

COOK Light (Red)
When lit, indicates steamer is in the cooking phase.

Power On/Off Switch (Bottom Compartment Only)
Power on/off switch with indicator light.

PREHEATING

Preheat the cooking cavity when the steamer is first used for the day or whenever the compartment is cold. Keep the door closed during the preheat cycle.

- Turn the power switch to ON, and set the timer to 10 minutes to preheat the compartment.
- When the buzzer sounds, turn the timer to the OFF position. The steamer is ready to cook.

STEAMING

Each steaming compartment has its own controls.

With the green READY light lit and the compartments preheated, the steamer is ready for use.

1. Open the compartment door.
2. Place pans of food to be cooked into the compartment and shut the door.
3. Set the timer to the desired cooking time. Steaming begins. The red COOK light will turn on.
4. The cooking cycle may be interrupted at any time by opening the compartment door. Close the door to resume cooking.
5. When the buzzer sounds, the timed steaming cycle has finished. Steaming stops, and the COOK light turns off. To silence the buzzer, turn the timer to the OFF position.

Refer to *Steam Cooking with Vulcan Kettles and Steamers* (packed with your steamer) for

suggested cooking times. Also refer to the COOKING GUILDELINES in this manual. Size, weight, pan loading and product quality will affect cooking times and should be adjusted to your own requirements.

DAILY SHUTDOWN

1. Press the power switch to the OFF position.
2. Clean the compartment(s).
3. Leave compartment doors open.

EXTENDED SHUTDOWN

1. Press the power switch to the OFF position.
2. Turn off steam supply.
3. Turn off main power supply.
4. Turn off water supply.
5. Thoroughly clean cavities, door seals, etc.
6. Leave compartment doors open.

CLEANING

WARNING: DISCONNECT THE ELECTRICAL POWER TO THE MACHINE AND FOLLOW LOCKOUT / TAGOUT PROCEDURES BEFORE CLEANING.

COOKING COMPARTMENT DRAINS

Keep compartment drains running freely. Inspect compartment drains daily for blockage. Remove any particles or debris from the perforated strainer daily (or more often if needed).

After cooking greasy foods or seafood, close the doors and operate each compartment for 25 to 30 minutes to flush any residual grease and oils down the compartment drain. Make a solution of warm water and non-chloride/chlorine/bleach based detergent and pour 1/2 gallon (1.9 liters) of it down each compartment drain. Rinse by pouring 1/2 gallon (1.9 liters) of hot water down each compartment drain.

COMPARTMENTS

DOOR GASKETS

Clean the gasket-sealing surface of the compartment doors to remove food acids for maximum gasket life. Do not use any solvents or sharp instruments. Wash with a cloth moistened in a solution of mild detergent and warm water. Rinse with a fresh cloth moistened with warm water to remove all traces of detergent.

Wipe dry with a clean cloth. Never apply food oils or petroleum lubricants directly to the door gasket. Petroleum-based solvents and lubricants will reduce gasket life.

LEAVE COMPARTMENT DOORS OPEN

Leave the compartment doors slightly open when the steamer is not in use. When the compartment is idle, never latch the door and apply pressure to the door gasket. Leaving the gasket under pressure can cause permanent deformation and reduce gasket life.

GUIDELINES FOR MAINTAINING STAINLESS STEEL SURFACES

There are four things that will break down stainless steel and allow corrosion to develop:

1) Abrasion

2) Deposits

3) Water

4) Chlorides.

Avoid rubbing with steel pads, wire brushes or scrapers that can leave iron deposits on stainless steel. Instead, use plastic scouring pads or soft cloths. For stubborn stains, use products such as Cameo™, talc or Zud First Impression™. Always rub parallel to the polish lines or with the grain.

Hard water will leave deposits that promote rust on stainless steel. Treated water from softeners or certain filters can eliminate these mineral deposits. Other deposits from food or lubrication must be properly removed by cleaning. Use mild detergent and non-chloride/chlorine/bleach based cleaners. Rinse thoroughly and wipe dry. Where appropriate, apply a polish recommended for stainless steel (such as Benefit™ or Super Sheen™) for extra protection and luster.

COOKING GUIDELINES

The steamer steam cooks vegetables, frankfurters, eggs in their shells, and certain other meats or food items at atmospheric pressure.

These cooking guidelines are suggestions only. You should experiment with your food products to determine the cooking times that will give you the best results. Variables which affect cooking time include size, weight, thickness of foods, temperature, density, previous condition of the foods (fresh, pre-blanched or frozen) and degree of doneness desired.

PRODUCTS TO BE COOKED IN SOLID PANS

PRODUCT	TIME (MINUTES)	QUANTITY PER PAN
Eggs, Scrambled	9 - 12	8 Doz.
Rice, Long Grain (Cover with 4 cups water/lb.)	23 - 25	2 Lb.
Pasta (Place perforated pan inside solid pan, cover with cold water)		
Spaghetti – Regular/Vermicelli	10 - 15	4 Lb.
Macaroni - Shells/Elbows	13 - 18	4 Lb.
Noodles - 1/2" Wide	10 - 15	4 Lb.
Lasagna Noodles	13 - 18	4 Lb.
Frozen Casseroles, Lasagna	33 - 35	Full Pan
Meat Loaf, 3-5 Lb. Each	38 - 40	15 Lb.
Beef		
Ground Chuck	19 - 25	10 Lb
Sliced as Purchased	33 - 40	10 Lb.
Shrimp, Frozen, 10 Shrimp per Lb.	4 - 5	4 Lb.
Beans		
Baked	8 - 9	10 Lb. Can
Refried	8 - 9	10 Lb. Can
Canned Vegetables	5 - 6	10 Lb. Can
Prunes, Dried	11 - 15	Full Pan

PRODUCTS TO BE COOKED IN PERFORATED PANS

PRODUCT	TIME (MINUTES)	QUANTITY PER PAN
SEAFOOD		
Clams		
Frozen	9 - 12	3 Doz.
Fresh, Cherrystone	4 - 6	3 Doz.
King Crab, Frozen		
Claws	3 - 4	2 1/2 Lb.
Legs	3 - 6	4 1/2 Lb.
Lobster Tail, Frozen	5 - 6	10 Lb.
Lobster, Live, 10" - 12"	4 - 5	4
Salmon Fillets, Frozen, 8 ounce each	4 - 5	7 1/2 Lb.
Scallops, Fresh	3 - 4	3 Lb.
Scrod Fillets, Fresh	3 - 5	4 Lb.
EGGS		
Hard Cooked	14 - 15	4 Doz.
Soft Cooked	8 - 10	4 Doz.
Soft Yoke for Caesar Salad	5 - 8	4 Doz.
MEATS		
Chicken — Breasts, Legs, Thighs	19 - 20	15 Lb.
Turkey, Frozen		
Breasts (2)	86 - 90	6 to 7 Lb. Each
Cut Lengthwise	53 - 55	20 to 25 Lb.
Corned Beef	40 - 75	6 to 8 Lb.
Hot Dogs and Wieners	2 - 3	80 to 100 Count
VEGETABLES		
Asparagus Spears		
Frozen	10 - 12	3 Doz.
Fresh	4 - 5	5 Lb.
Beans		
Green 2" Cut, Frozen/Fresh	5 - 6	5 Lb.
Lima, Frozen	7 - 8	5 Lb.
Baby Lima, Frozen	4 - 5	5 Lb.
Brussel Sprouts, Frozen	5 - 6	5 Lb.

PRODUCT	TIME (MINUTES)	QUANTITY PER PAN
VEGETABLES (Cont'd.)		
Broccoli		
Spears, Frozen	6 - 8	4 Lb.
Spears, Fresh	4 - 6	5 Lb.
Flowerettes, Frozen	4 - 6	5 Lb.
Cabbage, Fresh, 1/6 Cut	6 - 8	5 Lb.
Carrots		
Baby Whole, Frozen	6 - 8	7 Lb.
Crinkle Cut, Frozen	7 - 8	4 Lb.
Sliced, Fresh	9 - 11	9 Lb.
Cauliflower, Flowerettes		
Frozen	4 - 6	4 Lb.
Fresh	7 - 8	5 Lb.
Celery, 1" Diagonal Cut	5 - 7	5 Lb.
Corn		
Yellow Whole Kernel, Frozen	3 - 5	5 Lb.
Cobbettes, Frozen	6 - 8	27 Ears
Corn-On-Cob, Fresh	16 - 18	80 Ears
	16 - 18	54 Ears
	10 - 12	19 Ears
Peas, Green	4 - 6	5 Lb.
Potatoes, Whole Russet	50 - 55	40 Lb.
Spinach		
Chopped, Frozen	15 - 17	6 Lb.
Defrosted	4 - 5	6 Lb.
Fresh Cut	2 - 3	2 Lb.
Squash, Acorn Halves	22 - 25	10 Halves
Zucchini, Slices	6 - 8	10 Lb.
Frozen Mixed Vegetables	6 - 7	5 Lb.
FRUIT		
Fruit, Blanch for Peeling		
Grapefruit, Oranges	2 - 3	1 loose layer per pan
Pineapple, Whole for Cutting	2 - 4	

TROUBLESHOOTING

SYMPTOMS	POSSIBLE CAUSES	REMEDY
Steamer not steaming	No main power source	Check the power source or circuit breaker.
	Power switch in off position	Press power switch to the on position.
	Door open	Close door.
	Steam not being supplied to steamer	Turn on steam supply.

NOTES

SERVICE AND PARTS INFORMATION

To obtain service and parts information concerning this steamer, contact the Vulcan-Hart Service Agency in your area (refer to listing supplied with the steamer), or contact the Vulcan-Hart Service Department at the address or phone number shown on the front cover of this manual. Parts and service are also available at www.vulcanhart.com.