VULCAN

CATALOG OF REPLACEMENT PARTS

C24EO SERIES CONNECTIONLESS STEAMER

MODEL	ML NUMBER
MANUAL FILL	
C24EO3	ML-136006
C24EO5	ML-136007
AUTOFILL	
C24EO3AF	ML-152054
C24EO5AF	ML-152055



For additional information on Vulcan Equipment or to locate an authorized parts and service provider in your area, visit our website at www.vulcanequipment.com

VULCAN
DIVISION OF ITW FOOD EQUIPMENT GROUP, LLC
WWW.VULCANEQUIPMENT.COM

3600 NORTH POINT BLVD.
BALTIMORE, MD 21222

F-43227 Rev. C (October 2021)

 © VULCAN-HART COMPANY 2021

Table of Contents

5 CONTROLS
7 ELECTRICAL COMPONENTS
9 ELECTRICAL COMPONENTS (AUTOFILL)
11 DOOR
13 COMPARTMENT
15 DRAIN ASSEMBLY
17 HEATER ELEMENT AND SHIELDS
19 CABINET

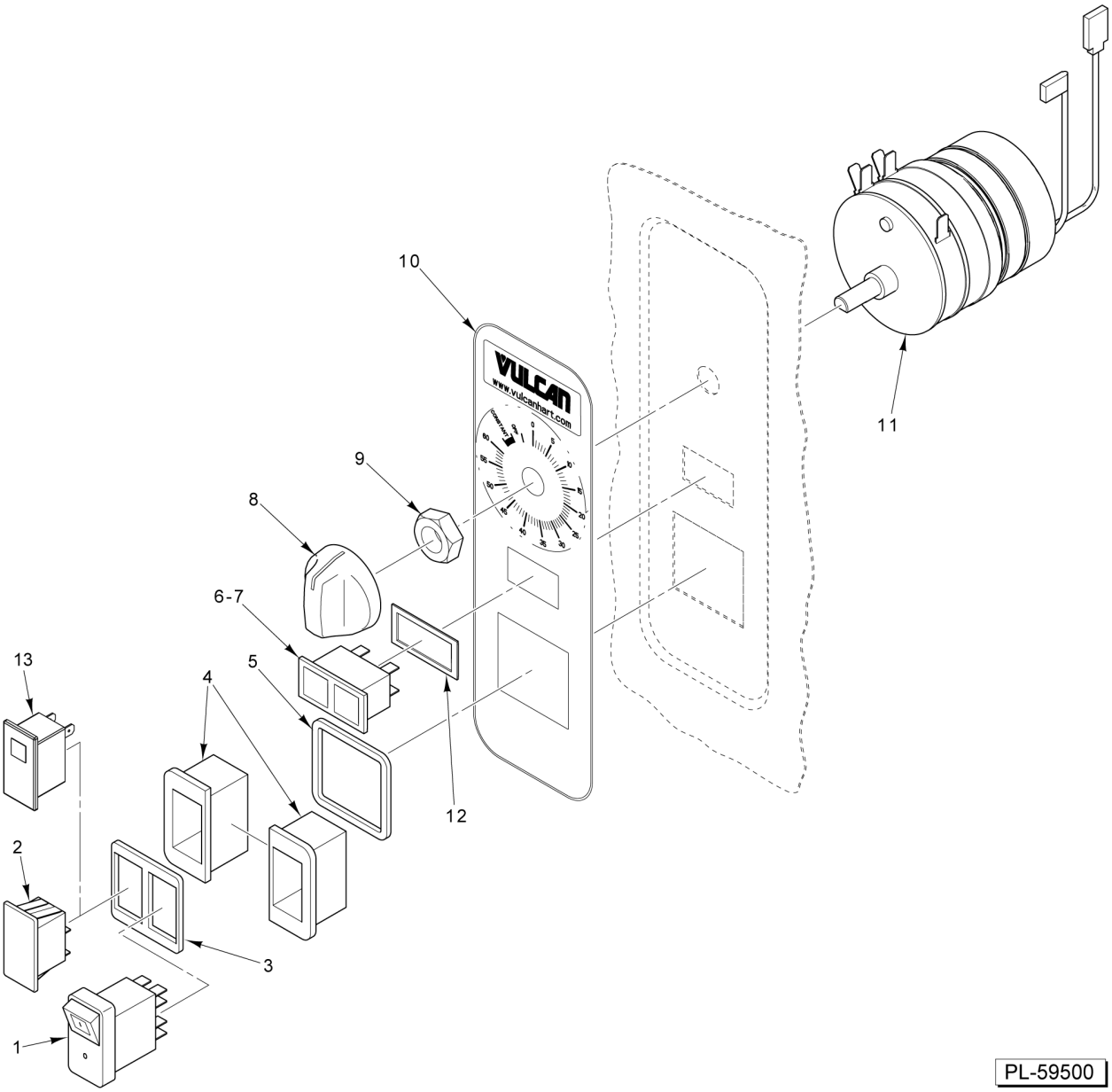

PL-59500

CONTROLS

CONTROLS

ILLUS. PL-59500	PART NO.	NAME OF PART	AMT.
1	00-855677-00003	Switch - On/Off Monentary LT. DPDT	1
2	00-856680-00001	Plug - Blank Assy. (Incls. Gasket)	1
3	00-855795-00001	Gasket - Switch	1
4	00-855794-00001	Bezel - Switch	2
5	00-855796-00001	Gasket - Bezel	1
6	00-913102-00265	Double Light Assy. (Amber - Low Water / Red - Cook)	1
7	00-856680-00001	Plug - Blank Assy. (Incls. Gasket)	1
8	00-856773-00001	Knob - Timer	1
9	00-854693-00001	Shaft - Rotary Seal	1
10	00-856771-00002	Overlay - Control (Vulcan)	1
11	00-913102-0176A	Kit - Timer (Incls Shaft Seal & Knob)	1
12	00-856680-00001	Plug - Blank Assy. (Incls. Gasket)	1
13	00-858738-00001	Light - Indicator (Overfill) (Autofill Units Only)	1

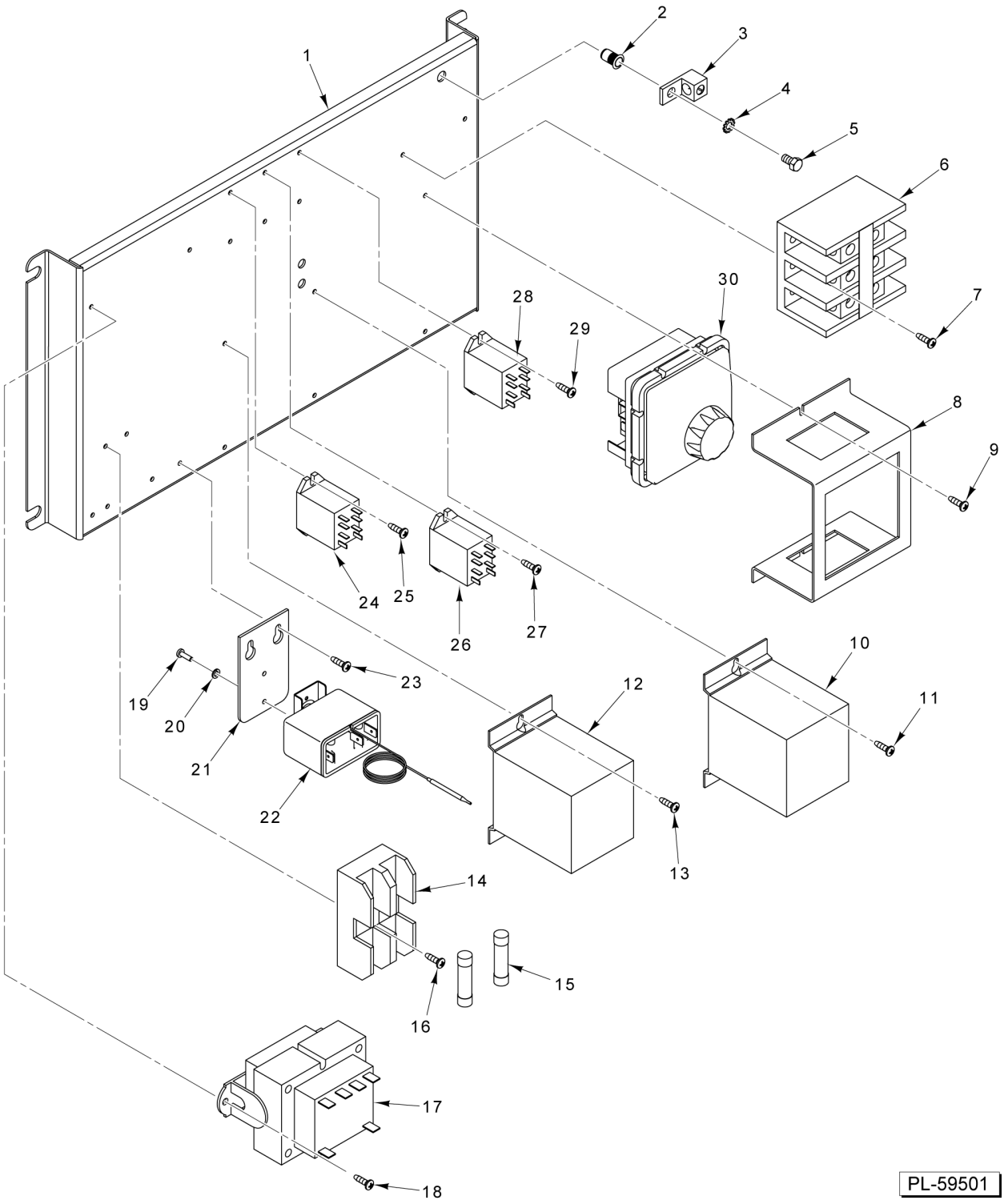

ELECTRICAL COMPONENTS

ELECTRICAL COMPONENTS

ILLUS. PL-59501	PART NO.	NAME OF PART	AMT.
1		Plate - Mounting	1
2	00-936742-00001	Nut 10-24 Insert	1
3	00-118544-00002	Lug - Grounding	1
4	WL-014-07	Lockwasher #10 External Shakeproof (SST)	1
5	SC-120-23	Mach. Screw 10-24 x 3/8 Hex Hd	1
6	00-410472-00008	Block - Terminal (3-Pole)	1
7	SD-019-29	Self-Tapping Screw 6-20 x 1/2 Phil. Pan Hd., Type B	2
8		Bracket - Controller	1
9	SD-019-29	Self-Tapping Screw 6-20 x 1/2 Phil. Pan Hd., Type B	2
10	00-840115	Contactor (25 Amp.)	1
11	SD-019-29	Self-Tapping Screw 6-20 x 1/2 Phil. Pan Hd., Type B	2
12	00-840115	Contactor (25 Amp.)	1
13	SD-019-29	Self-Tapping Screw 6-20 x 1/2 Phil. Pan Hd., Type B	2
14	00-855028-00001	Block - Fuse	1
15	00-423986-00001	Fuse (KTK-R-3)	2
16	SD-019-29	Self-Tapping Screw 6-20 x 1/2 Phil. Pan Hd., Type B	2
17	00-294500-00033	Transformer (60 VA. 50/60 Hz.)	1
18	SD-019-29	Self-Tapping Screw 6-20 x 1/2 Phil. Pan Hd., Type B	2
19	SC-113-10	Mach. Screw 4-40 x 3/8 Phil. Pan Hd	1
20	WL-003-09	Lockwasher #6 Helical	1
21		Mount - High Limit	1
22	00-857637-00001	Thermostat - High Limit Temperature	1
23	SD-019-29	Self-Tapping Screw 6-20 x 1/2 Phil. Pan Hd., Type B	2
24	00-416535-00006	Relay - DPST (120 V.)	1
25	SD-019-29	Self-Tapping Screw 6-20 x 1/2 Phil. Pan Hd., Type B	2
26	00-416535-00006	Relay - DPST (120 V.)	1
27	SD-019-29	Self-Tapping Screw 6-20 x 1/2 Phil. Pan Hd., Type B	2
28	00-416535-00006	Relay - DPST (120 V.)	1
29	SD-019-29	Self-Tapping Screw 6-20 x 1/2 Phil. Pan Hd., Type B	2
30	00-857578-00001	Controller - Temperature	1

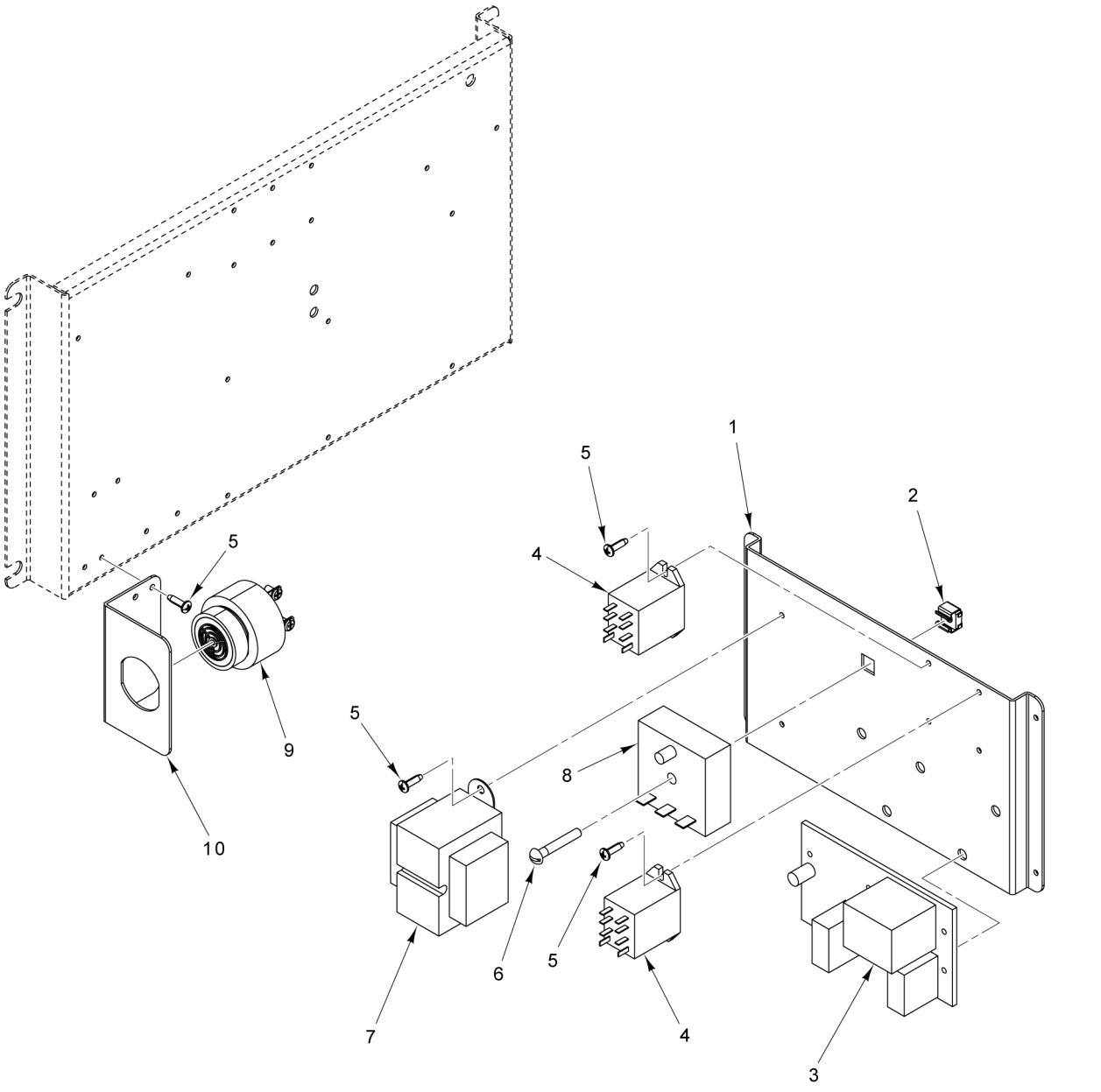

ELECTRICAL COMPONENTS (AUTOFILL)

ELECTRICAL COMPONENTS (AUTOFILL)

ILLUS. PL-61469	PART NO.	NAME OF PART	AMT.
1	00-858726-00002	Plate - Control	1
2	NS-049-01	Panel Nut 10-24	1
3	00-844069-00001	Control - Low Water	1
4	00-856699-00001	Switch - Relay	2
5	SD-019-29	Self-Tapping Screw 6-20 x 1/2 Phil. Pan Hd., Type B	6
6	SC-021-96	Mach. Screw 10-24 x 1-1/4 Slotted Rd. Hd. (SST)	1
7	00-411500-00012	Transformer (120 VAC, 24 V., 40 VA)	1
8	00-855661-00001	Relay - Time Delay	1
9	00-858728-00001	Buzzer (Water Level)	1
10	00-858726-00003	Bracket - Buzzer	1

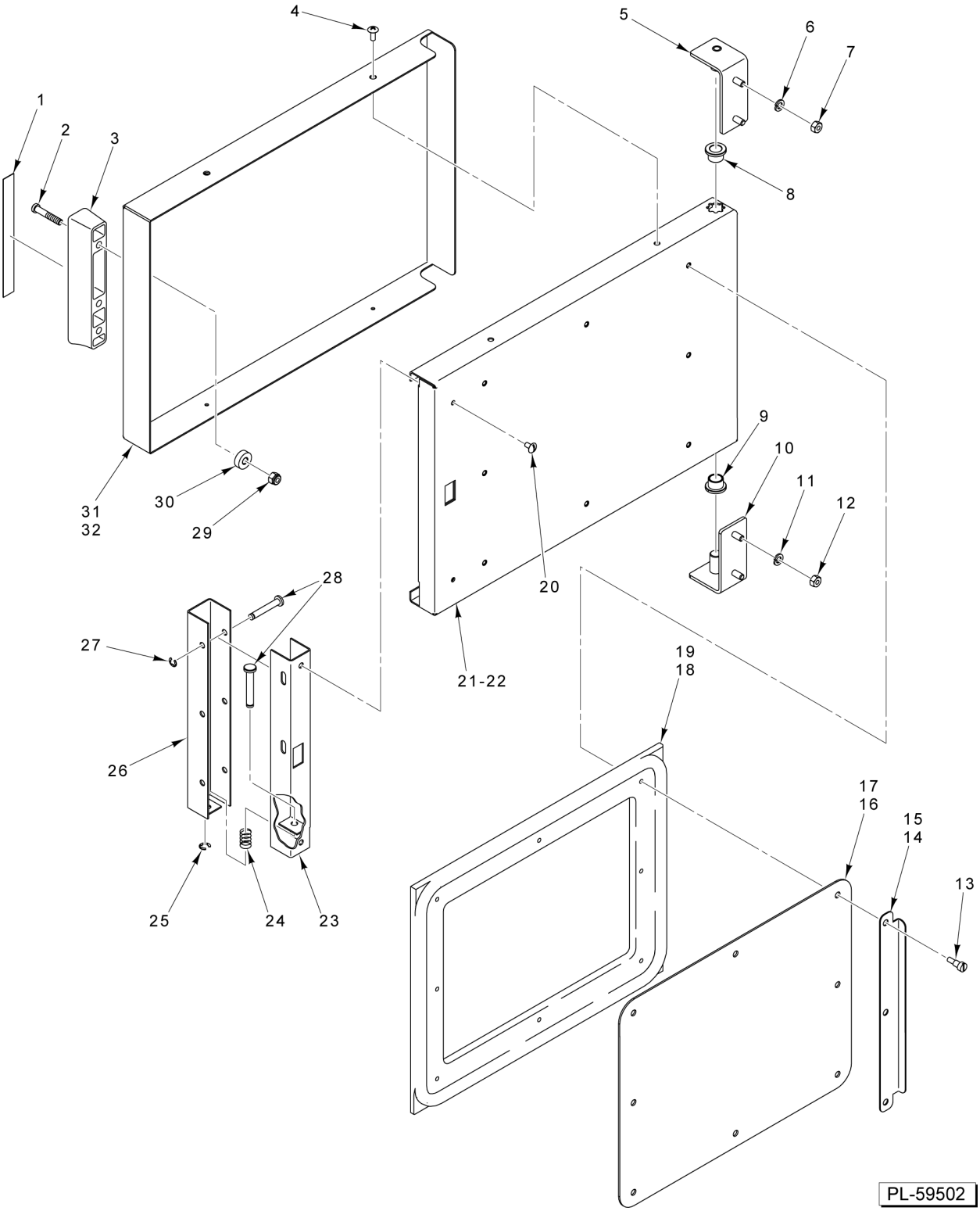
1
2
3
4
5
6
7
8
9
10
11
12
20
21-22
19
18
17
16
15
14
13
27
28
26
25
24
23
31
32
30
29
PL-59502

DOOR

DOOR

ILLUS. PL-59502	PART NO.	NAME OF PART	AMT.
1	00-855288-00001	Face Plate - Door Handle	1
2	SC-120-70	Cap Screw 1/4-20 x 1-5/8 Hex Socket Hd	2
3	00-855287-00001	Handle - Door	1
4	SC-066-20	Mach. Screw 10-32 x 1/2 Phil. Truss Hd. (SST)	4
5	00-855521-00001	Hinge Assy. - Door (Top)	1
6	WL-006-17	Lockwasher 1/4 Helical (SST)	2
7	NS-046-38	Nut 1/4-20 Hex (SST)	2
8	00-817643	Bearing - Flanged	1
9	00-817643	Bearing - Flanged	1
10	00-855521-00002	Hinge Assy. - Door (Bottom)	1
11	WL-006-17	Lockwasher 1/4 Helical (SST)	2
12	NS-046-38	Nut 1/4-20 Hex (SST)	2
13	00-855597-00002	Screw 10-32 x 5/16 Slotted (SST)	3
14	00-855714-00001	Gasket - Door Guard (3-Pan)	1
15	00-855714-00002	Gasket - Door Guard (5-Pan)	1
16	00-855285-00001	Gasket Retainer - Door (3-Pan)	1
17	00-855285-00002	Gasket Retainer - Door (5-Pan)	1
18	00-857085-00001	Kit - Door Gasket (3 Pan)	1
19	00-857085-00002	Kit - Door Gasket (5 Pan)	1
20	SC-053-05	Mach. Screw 10-24 x 3/8 Slotted Truss Hd. (SST)	2
21	00-855581-00001	Door - Inner (3 Pan)	1
22	00-855581-00002	Door - Inner (5 Pan)	1
23	00-855584-00001	Door Latch - Bracket	1
24	00-855298-00001	Latch Spring - Door	1
25	RR-006-22	Retaining Ring 1/4 In. (SST)	1
26	00-855585-00001	Latch Actuator - Door	1
27	RR-006-22	Retaining Ring 1/4 In. (SST)	3
28	00-855590-00002	Pin - Clevis 1.525 In. Lg	4
29	NS-048-63	Lock Nut 1/4-20 Hex (SST)	2
30	00-855290-00001	Bearing - Door Handle	2
31	00-855580-00001	Frame - Door (3-Pan)	1
32	00-855580-00002	Frame - Door (5-Pan)	1

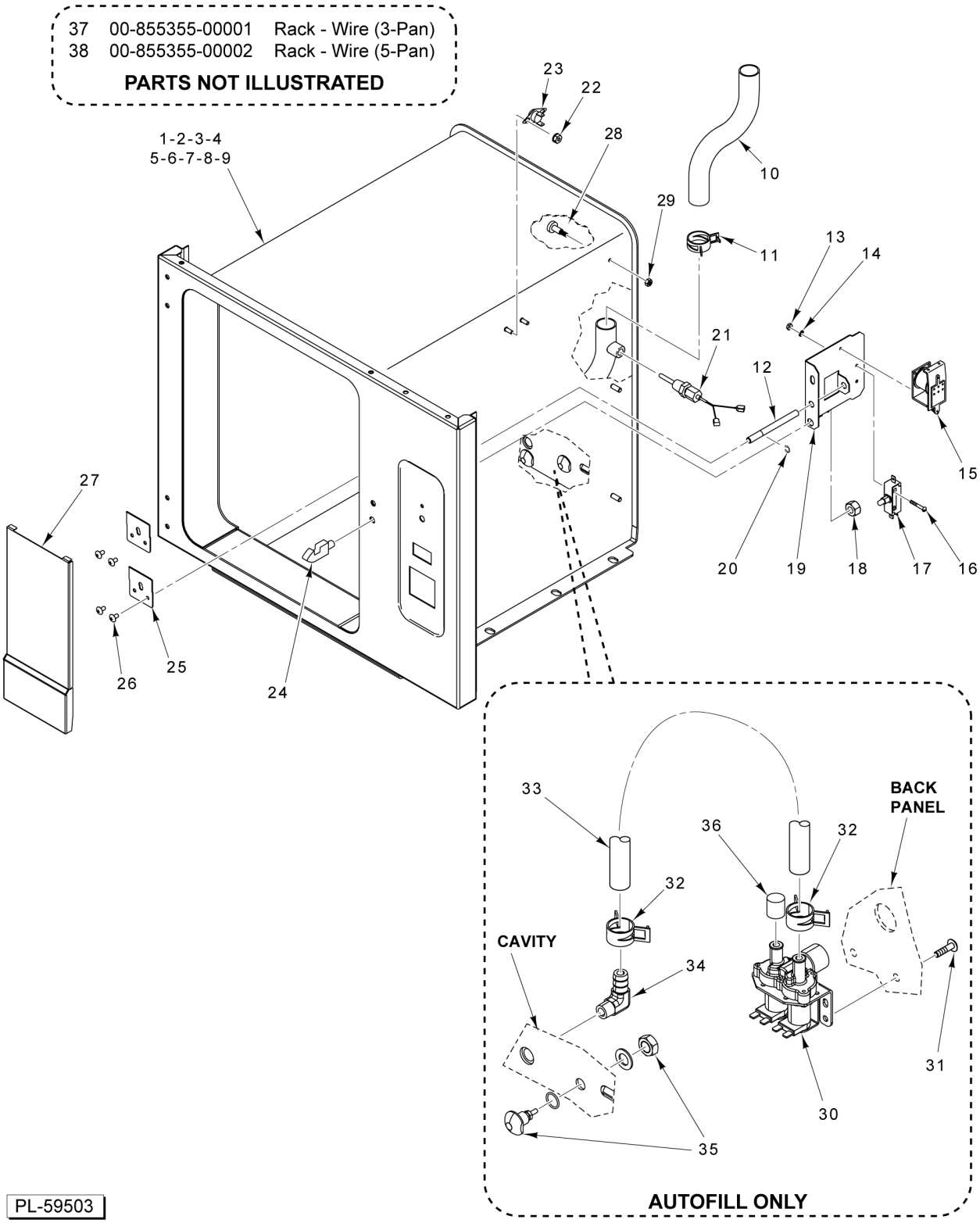

COMPARTMENT

COMPARTMENT

ILLUS. PL-59503	PART NO.	NAME OF PART	AMT.
1	00-857555-00001	Compartment (3 Pan)	1
2	00-857555-00002	Compartment (3-Pan) (Autofill Units Only)	1
3	00-857569-00001	Compartment (5 Pan)	1
4	00-857569-00002	Compartment (5-Pan) (Autofill Units Only)	1
5	00-857601-00001	Insulation - Rear (3 Pan)	1
6	00-857602-00001	Insulation - Rear (5 Pan)	1
7	00-857553-00001	Wrap - Insulation (3 Pan)	1
8	00-857554-00001	Wrap - Insulation (5 Pan)	1
9	00-557598	Tape - Aluminum Foil	AR
10	00-557477	Hose (4 Ft.) (Green)	AR
11	00-557847-00001	Clamp - Hose	2
12	00-855307-00001	Actuator Rod - Door	1
13	NS-011-07	Nut 6-32 Hex (SST)	2
14	WL-014-03	Lockwasher #6 External (SST)	2
15	00-411499-00004	Buzzer (115 V.)	1
16	SC-021-12	Mach. Screw 6-32 x 1 Slotted Rd. Hd. (SST)	1
17	00-842049	Switch - Door	1
18	NS-015-13	Nut 3/8-16 Hex (SST)	1
19	00-855308-00001	Actuator Bracket - Door	1
20	RR-006-22	Retaining Ring 1/4 In. (SST)	2
21	00-857610-00001	Probe - Temperature	1
22	NS-044-09	Nut Assy. 10-24 Hex KEPS	2
23	00-857603-00001	Thermostat - Hold	1
24	00-855586-00001	Bullet - Door	1
25	00-857574-00001	Mount - Baffle	2
26	SC-066-22	Mach. Screw 10-32 x 3/8 Phil. Truss Hd. (SST)	4
27	00-858725-00001	Baffle Assy. - Exhaust	1
28	00-855337-00001	Shoulder Screw 10-32 Slotted (SST)	4
29	NS-049-09	Nut Assy. 10-32 (SST)	8
30	00-856720-00006	Valve - Dual Water 4.8 - 1.35 GPM (Autofill Units Only)	1
31	SC-066-06	Mach. Screw 10-24 x 1/2 Phil. Truss Hd. (SST) (Autofill Units Only)	2
32	00-557844	Clamp - Hose (19mm) (Autofill Units Only)	2
33	00-557681	Hose (16 In.) (Autofill Units Only)	1
34	FP-090-91	Fitting - Hose 1/2 Hose to 1/4 NPT (Brass) (Autofill Units Only)	1
35	00-858727	Probe Assy. (Incls. Gasket, Washer, & Nuts) (Autofill Units Only)	2
36	00-857526-00001	Cap - Vinyl (1/2 ID x 1 In.) (Autofill Units Only)	1
37	00-855355-00001	Rack - Wire (3-Pan)	AR
38	00-855355-00002	Rack - Wire (5-Pan)	AR

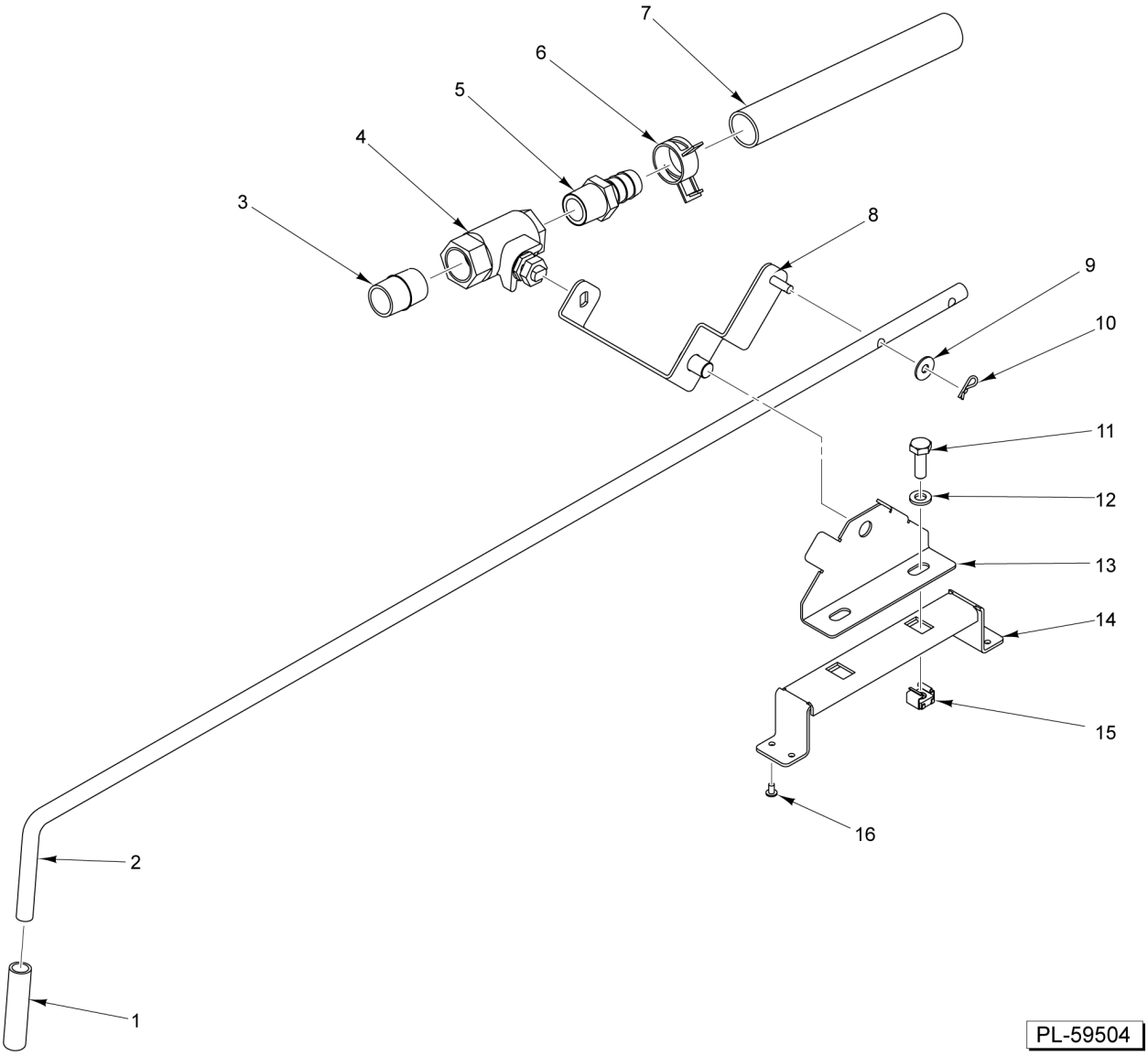

DRAIN ASSEMBLY

DRAIN ASSEMBLY

ILLUS. PL-59504	PART NO.	NAME OF PART	AMT.
1	00-856736-00001	Cap - Handle	1
2	00-856729-00001	Handle - Drain	1
3	FP-040-42	Pipe 1/2 x 1-1/8 TBE (Brass)	1
4	00-881161	Valve - Ball	1
5	FP-087-39	Fitting - Hose 5/8 Hose to 1/2 NPT (Brass)	1
6	00-557845	Clamp - Hose (24mm)	1
7	00-557475	Hose 5/8 ID x 0.955 OD (1.66 Ft.) (Blue)	AR
8	00-857560-00001	Lever - Drain	1
9	WS-029-45	Washer	1
10	00-855729-00001	Pin - Cotter	1
11	SC-041-01	Cap Screw 1/4-20 x 3/4 Hex Hd. (SST)	2
12	WL-006-17	Lockwasher 1/4 Helical (SST)	2
13	00-857561-00001	Pivot - Drain	1
14	00-857562-00001	Spacer - Drain Pivot	1
15	NS-049-13	Insert	2
16	RS-030-08	Rivet - Dome 1/8 In	4

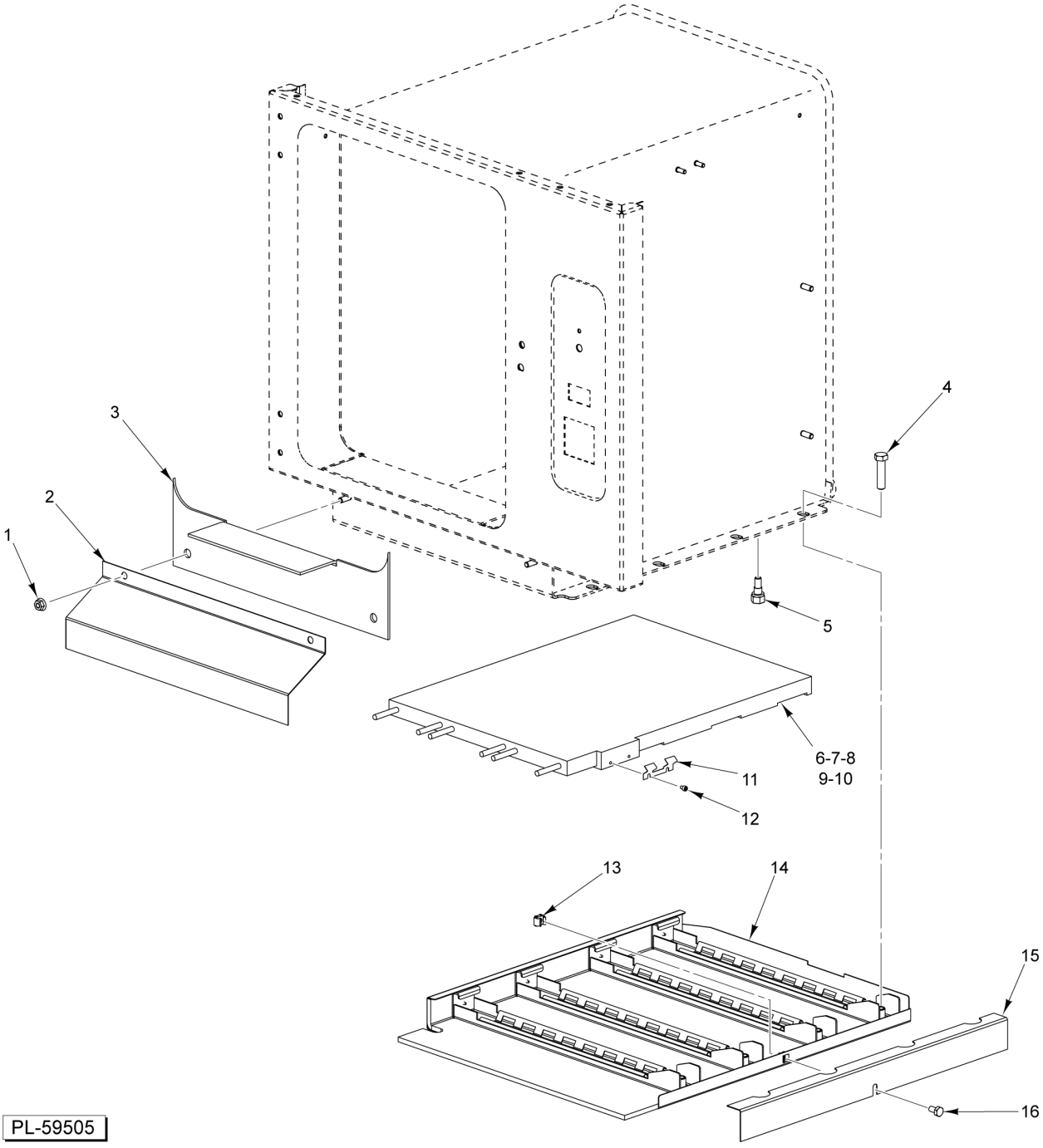

HEATER ELEMENT AND SHIELDS

HEATER ELEMENT AND SHIELDS

ILLUS. PL-59505	PART NO.	NAME OF PART	AMT.
1	NS-038-04	Lock Nut 1/4-20	2
2	00-857565-00001	Heat Shield - Front	1
3	00-857589-00001	Insulation - Front	1
4	SC-041-32	Cap Screw 3/8-16 x 1-1/2 Hex Hd. (SST)	4
5	00-857636-00001	Thermostat - Low Water	1
6	00-913115-00001	Kit - Heater Element 208/240V (3 Pan)	1
7	00-913115-00002	Kit - Heater Element 208V (5 Pan)	1
8	00-913115-00003	Kit - Heater Element 240V (5 Pan)	1
9	00-913115-00004	Kit - Heater Element 480V (5 Pan)	1
10	00-819643-00002	Silicone - Heatsink 13 1/2 Oz	2
11	00-857638-00001	Clamp - Capillary Bulb	1
12	SC-040-75	Cap Screw 6-32 x 3/16 Hex Socket Hd	2
13	NS-049-03	Panel Nut 1/4-20	1
14	00-857608-00001	Shield Assy. - Heat	1
15	00-857564-00001	Heat Shield - Side	1
16	SC-041-50	Cap Screw 1/4-20 x 1/2 Hex Hd. (SST)	1

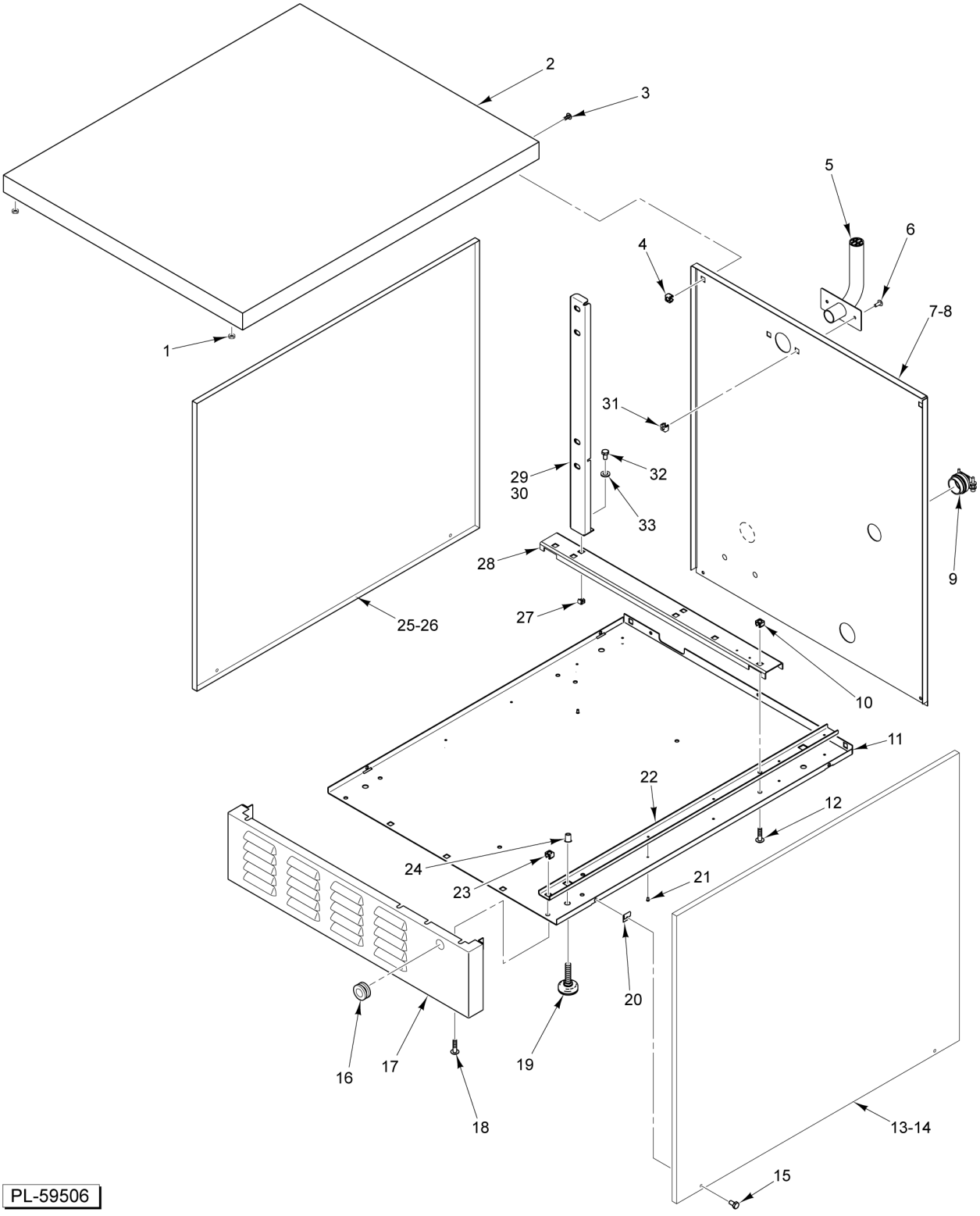
2
3
5
6
4
7-8
1
31
29
30
32
33
9
28
27
25-26
10
11
22
12
24
23
21
20
16
17
19
18
13-14
15
PL-59506

CABINET

CABINET

ILLUS. PL-59506	PART NO.	NAME OF PART	AMT.
1	NS-038-04	Lock Nut 1/4-20	2
2	00-855547-00003	Top Panel	1
3	SC-066-06	Mach. Screw 10-24 x 1/2 Phil. Truss Hd. (SST)	2
4	NS-049-01	Panel Nut 10-24	2
5	00-857586-00001	Vent	1
6	SC-066-06	Mach. Screw 10-24 x 1/2 Phil. Truss Hd. (SST)	2
7	00-857588-00001	Back Panel - Cabinet (3 Pan)	1
8	00-857587-00001	Back Panel - Cabinet (5 Pan)	1
9	FE-026-41	Connector - Conduit	2
10	NS-049-03	Panel Nut 1/4-20	2
11	00-856726-00001	Panel - Cabinet Base	1
12	SC-115-70	Mach. Screw 1/4-20 x 1 Slotted Truss Hd. (SST)	2
13	00-856731-00001	Side Panel - Cabinet (3-Pan)	1
14	00-856731-00002	Side Panel - Cabinet (5-Pan)	1
15	SC-093-27	Mach. Screw 10-24 x 7/8 Phil. Truss Hd. (SST)	4
16	FE-025-79	Bushing - Snap (Electric)	1
17	00-855314-00001	Apron - Cabinet	1
18	SC-066-06	Mach. Screw 10-24 x 1/2 Phil. Truss Hd. (SST)	2
19	00-856760-00001	Leg - Leveling (Counter Top)	4
20	00-854766-00001	Nut - Speed 3 Type	4
21	RS-030-08	Rivet - Dome 1/8 In	8
22	00-856738-00001	Channel - Cabinet Base	2
23	NS-049-03	Panel Nut 1/4-20	2
24	00-857508-00001	Insert 3/16-16	4
25	00-856731-00001	Side Panel - Cabinet (3-Pan)	1
26	00-856731-00002	Side Panel - Cabinet (5-Pan)	1
27	NS-049-03	Panel Nut 1/4-20	2
28	00-857566-00001	Cross Channel - Base (Cabinet)	1
29	00-856747-00001	Support Channel - Cabinet (3-Pan)	2
30	00-856747-00002	Support Channel - Cabinet (5-Pan)	2
31	NS-049-01	Panel Nut 10-24	2
32	SC-041-50	Cap Screw 1/4-20 x 1/2 Hex Hd. (SST)	2
33	WL-006-17	Lockwasher 1/4 Helical (SST)	2