# SERVICE MANUAL




## C24GA AND C24DA SERIES CONVECTION STEAMER

| | |
|---|---|
| **C24GA6** | **ML-136021** |
| | **ML-136056** |
| | **ML-136085** |
| **C24GA10** | **ML-136022** |
| | **ML-136057** |
| | **ML-136085** |
| **C24DA6** | **ML-152022** |
| **C24DA10** | **ML-152023** |

**- NOTICE -**

**This Manual is prepared for the use of trained Hobart Service Technicians and should not be used by those not properly qualified.**

**This manual is not intended to be all encompassing. If you have not attended a Hobart Service School for this product, you should read, in its entirety, the repair procedure you wish to perform to determine if you have the necessary tools, instruments and skills required to perform the procedure. Procedures for which you do not have the necessary tools, instruments and skills should be performed by a trained Hobart Service Technician.**

**The reproduction, transfer, sale or other use of this manual, without the express written consent of Hobart, is prohibited.**

**This manual has been provided to you by ITW Food Equipment Group LLC ("ITW FEG") without charge and remains the property of ITW FEG, and by accepting this manual you agree that you will return it to ITW FEG promptly upon its request for such return at any time in the future.**

# TABLE OF CONTENTS

SERVICE UPDATES ..... 4
SERVICE UPDATES - C24GA ..... 4
TIS DOCUMENT LIST - C24GA SERIES ..... 4

GENERAL ..... 7
INSTALLATION, OPERATION AND CLEANING ..... 7
INTRODUCTION ..... 7
GENERAL ..... 7
STEAM COOKING ..... 7
WATER QUALITY STATEMENT ..... 7
SPECIFICATIONS ..... 8
ELECTRIC ..... 8
GAS PRESSURES ..... 8
TOOLS ..... 8

REMOVAL AND REPLACEMENT OF PARTS ..... 10
COVERS AND PANELS ..... 10
COOKING COMPARTMENT SIDE PANELS ..... 10
COOKING COMPARTMENT FLUE WRAP ..... 10
CABINET BASE RIGHT SIDE PANEL ..... 10
CABINET BASE LEFT SIDE PANEL ..... 10
CABINET BASE FRONT PANEL ..... 11
CABINET BASE REAR PANEL ..... 11
COMPARTMENT CONTROLS-OLD ..... 11
COOKING COMPARTMENT DOOR ..... 12
MAIN BURNER ..... 15
GAS COMBINATION CONTROL VALVE ..... 16
GENERATOR ASSEMBLY ..... 17
FILL AND COLD WATER SOLENOID VALVES ..... 19
PILOT/SPARK PROBE FLAME SENSOR (ONLY UNITS WITH ADJUSTABLE PILOT) ..... 20
BLOWER CONTROL RELAY (K3) ..... 21

SERVICE PROCEDURES AND ADJUSTMENTS ..... 22
BLOWER AIR PRESSURE ADJUSTMENT (ONLY UNITS WITH ADJUSTABLE PILOT) ..... 22
DSI BURNER ADJUSTMENT ..... 24
HSI BURNER ..... 26
AIR PRESSURE SWITCH ADJUSTMENT (ONLY UNITS WITH ADJUSTABLE PILOT) ..... 29
PILOT BURNER ADJUSTMENT (ONLY UNITS WITH ADJUSTABLE PILOT) ..... 30
OPERATING PRESSURE SWITCH ..... 36
AUTOMATIC IGNITION SYSTEMS ..... 37
IGNITION TEST ..... 41
MANIFOLD PRESSURE ADJUSTMENT (ONLY UNITS WITH ADJUSTABLE PILOT) ..... 41
COOKING COMPARTMENT ..... 43
DOOR ..... 43
LATCH ADJUSTMENT ..... 43
STRIKER ADJUSTMENT ..... 44
DELIME GENERATOR ..... 44
COOKING CYCLE TEST ..... 45
GENERAL ..... 45
PROBE INSPECTION ..... 46
MAINTENANCE CHECKS ..... 46

ELECTRICAL OPERATION ..... 48
WATER LEVEL CONTROLS ..... 48
LOW LEVEL CUT-OFF AND DIFFERENTIAL CONTROL ..... 48
SEQUENCE OF OPERATION ..... 48
ADJUSTABLE PILOT BURNER ..... 51

DSI BURNER ..... 53
HSI BURNER ..... 54
COMPONENT FUNCTION - COMPARTMENT ..... 55
COMPONENT FUNCTION - STEAM GENERATOR ..... 56
COMPONENT LOCATION ..... 57
SCHEMATICS AND DIAGRAMS ..... 59

TROUBLESHOOTING ..... 64
TROUBLESHOOTING (ADJUSTABLE PILOTS ONLY) ..... 64
GENERAL ..... 64
WATER NOT BEING SUPPLIED TO GENERATOR ..... 64
PILOT OR MAIN BURNER WILL NOT LIGHT ..... 64
DRAIN SOLENOID VALVE DOES NOT DRAIN ..... 64
WATER ACCUMULATING IN COMPARTMENT ..... 64
COOKING CYCLE CANNOT BE ACTIVATED ..... 64
STEAMER ACHIEVES PRESSURE SLOWER THAN NORMAL ..... 64
TROUBLESHOOTING SEQUENCE OF OPERATION ..... 65
TROUBLESHOOTING CHART ..... 66
LED DIAGNOSTIC FLASH CODES (SOLARONICS BURNER SYSTEM WITH FENWAL IGNITION MODULE UNITS ONLY) ..... 70

© VULCAN 2025

# SERVICE UPDATES

## SERVICE UPDATES - C24GA

**November 2025**
- Updated HSI BURNER in ELECTRICAL OPERATION.

**November, 2023**
- Updated ADJUSTABLE PILOT BURNER .
- Added DSI BURNER .
- Added HSI BURNER .

**January, 2019**
- Add swtich step to DSI BURNER ADJUSTMENT.

**December, 2018**
- Add C24DA Schematic and Models to service manual.

**November, 2018**
- Added DSI BURNER ADJUSTMENT.
- Added BLOWER CONTROL RELAY (K3).
- TROUBLESHOOTING CHART
- Added ADJUSTABLE PILOT BURNER .
- Miscellaneous updates per product support.

**November, 2014**
- This Service Manual was completely revised to include the Professional Model. This revsion was released in November, 2014. No updates presently apply.

## TIS DOCUMENT LIST - C24GA Series

| SERVICE TAB | |
|---|---|
| **Document Title** | **Document Type** |
| C24GA Convection Steamer Service Manual | Service Manual |
| #00-858726 Burner Assembly Replacement | Service Kit Instructions (SKI) |
| C24GA 6 & 10 Gas Floor Steamers - Pressure Switch Not Maintaining Setpoint | Temporary Service Instructions (TSI) |
| Substitute Ignition Module C24GA steamers Part No. 00-857207-00002 | Temporary Service Instructions (TSI) |

| SERVICE TAB (Multimedia) | |
|---|---|
| **Document Title** | **Document Type** |
| Did You KNow - C24GA10 | Misc |
| All Stainless Steel with Automatic Timers & Manual Boilers Direct Steam - ST. STL. LEG | Instructions |
| Electric Boiler Owners Manual | Instructions |

| SERVICE TAB (Multimedia) | |
|---|---|
| Repair Flood-Damaged Food Equipment | Misc |
| C24GA6 & C24GA10 Gas Convection Steamers I/O Manual | Operator |
| C24GA6 & C24GA10 Nason Relay Instructions | Service Instructions |
| Deliming Instructions C24GA6/10 Series Steamers | Service Instructions |
| Fundamentals of Steam | Service Instructions |
| Fundamentals of Gas | Service Instructions |
| Hobart Water Filter Replacement Cross Reference Sheet | Service Instructions |
| Pilot & Burner Problems on Units Without Powered Burners Service Information | Service Instructions |
| ScaleStick Twin System, Part No. 01-234301-51200 | Service Instructions |
| Water Level Pressure Switches Information | Service Instructions |
| Rating Plate Locations on Current Vulcan-Hart/Wolf Range Equipment | Technical Service Bulletin (TSB) |
| SB630 Gas Range Thermocouples | Technical Service Bulletin (TSB) |
| SB760 Vulcan Steam Temporary Service Instruction / Inspect All Warrick Water Level | Technical Service Bulletin (TSB) |
| SB780 Vulcan C24GA Series Steamers - Enhancements & Additional Service | Technical Service Bulletin (TSB) |
| SB790 Vulcan C24GA - Elimination of Hold Thermostat | Technical Service Bulletin (TSB) |
| SB800 Vulcan Steam Equipment - Enhanced Ignition Modules | Technical Service Bulletin (TSB) |
| SB820 C24GA Series Steamers - Pilot Air Assembly Change & Pressure Regulator | Technical Service Bulletin (TSB) |
| SB860 Atmospheric Steamer Door Switch Actuator Rod | Technical Service Bulletin (TSB) |
| TSB 1374 Water Level Control Part No. 844069-1 Changes | Technical Service Bulletin (TSB) |
| TSB 1393 Steam Cooking Equipment - Prevention, Detection and Treatment of Corrosion on Stainless Steel | Technical Service Bulletin (TSB) |
| TSB 1037A Hobart to Vulcan "Common" Model Cross Reference List | Technical Service Bulletin (TSB) |
| TSB 1270 C24GA (Vulcan) - Elimination of Hold Thermostat | Technical Service Bulletin (TSB) |
| TSB 1281 C24GA(Vulcan) Series Enhancements & Additional Service Information | Technical Service Bulletin (TSB) |
| TSB 1298A Atmospheric Steamer Door Switch Actuator Rod | Technical Service Bulletin (TSB) |
| TSB 1300B Vulcan Steam Equipment - Enhanced Ignition Modules | Technical Service Bulletin (TSB) |
| TSB 1301 Onwatch Quicklook 72 for Gas Cooking Equipment | Technical Service Bulletin (TSB) |
| TSB 1308 C24GA (Vulcan) Series Steamers - Pilot Air Assembly Change and Pressure Regulator Addition | Technical Service Bulletin (TSB) |

| SERVICE TAB (Multimedia) | |
|---|---|
| TSB 1339 Vulcan High Efficiency Gas Steamers - Burner Noise | Technical Service Bulletin (TSB) |
| TSB 1360 C24GA Series Gas Steamers - Worm Gear Hose Clamps Replacement with Constant Tension Hose Clamps | Technical Service Bulletin (TSB) |
| TSB 1385 C24GA Series Gas Steamers - Universal Generator Kit Part No. 857684-1 | Temporary Service Instructions (TSI) |
| C24GA Series Gas Steamers - Blower Air Pressure Adjustment Procedure Change | Temporary Service Instructions (TSI) |
| Hobart & Vulcan Steamers/Kettles with Warrick Water Level Control Boards | Temporary Service Instructions (TSI) |
| Steamers - Main Transformer Primary Tap on Electric Machines | Temporary Service Instructions (TSI) |
| Steamers Wire Insulation Pinched Under Screw Lug on Terminal Block & Contractors | Temporary Service Instructions (TSI) |

| PARTS TAB | |
|---|---|
| **Document Title** | **Document Type** |
| Part Catalog for C24GA 6 & 10 | Parts Catalog |

# GENERAL

## INSTALLATION, OPERATION AND CLEANING

Refer to the F35423 - C24GA6/10 Series Gas Convection Steamers Installation & Operation Manual and F35439 -Deliming Instructions C24GA6/10 Series Steamers for specific instructions.

## INTRODUCTION

**General**
Procedures in this manual will apply to all models unless specified. Pictures and illustrations can be of any model unless the picture or illustration needs to be model specific. All information and specifications contained in this manual are based on the latest product information available at the time of printing.

**Steam Cooking**
Convection steamers offer an efficient way to produce many foods in either small portions or larger batches. Convection steam cooking will steam cook fresh foods or will steam defrost and cook frozen foods providing the maximum color, flavor and nutritional value with the least expenditure of energy and labor. The atmospheric steaming compartment allows the operator to open and close the door anytime during a cooking cycle. The generator burner heating will shut off when the door is opened then re-start when the door is closed.

| Model Designations | | |
|---|---|---|
| **MODEL** | **CONTROLS** | **PAN CAPACITY*** |
| C24GA6-BSC | Basic | 6 |
| C24GA6-DLX | Professional | 6 |
| C24GA10-BSC | Basic | 10 |
| C24GA10-DLX | Professional | 10 |
| *** based on 1 inch pan depth** | | |

## WATER QUALITY STATEMENT

The fact that a water supply is potable is no guarantee that it is suitable for steam generation. Proper water quality can improve the taste of the food prepared in the oven, reduce scale build-up or corrosion, and extend equipment life. Local water conditions vary from one location to another and can change throughout the year. The recommended water treatment for effective and efficient use of this equipment will vary depending on the local water conditions. Your water supply must be within the general guidelines outlined in the chart below at all times during use of this machine or service issues not covered under warranty may result.

Water hardness should be treated by removing the impurities (water softener with carbon block or dechlorinator and/or in-line water treatment). Low water hardness may also require a water treatment system to reduce potential corrosion. Water treatment has been shown to reduce costs associated with machine cleaning, reduce deliming and reduce corrosion of metallic surfaces.

Daily washing and rinsing of the cavity is required. In some cases, it may be needed more than once a day to prevent compounding of contaminants deposited inside cavity even with acceptable filtration. Failure to wash and rinse down the cavity daily could result in damage of the oven cavity and interior parts. A Reverse Osmosis water treatment system can be installed to eliminate chlorides or other contaminates from the water if needed.

**NOTE:** Failure to properly maintain water quality or preventative procedures for water can lead to issues not covered under warranty.

**⚠ WARNING**

**Plumbing connections must comply with the applicable sanitary, safety and plumbing codes.**

| WATER SUPPLY GENERAL GUIDELINES [1] | |
|---|---|
| Supply Pressure (dynamic flow) | 30-60 psig |
| Hardness | less than 3 grains (17.1 ppm = 1 grain of hardness) |
| Silica | less than 13 ppm |
| Chloramines [2] | zero |
| Chlorides [2] | less than 30 ppm [3] |
| Total Chlorine [4] | zero |
| PH | range 7-8 |
| Undissolved Solids | less than 5 microns |

**[1] Testing of water is always done AFTER water filter or water treatment used. Water quality does change with usage and should be checked after idle times to see if the condition worsens.**

**[2] A carbon block filter system should always be used to remove Chlorine and Chloramine. If a water softener is used, a carbon block is still required. Check with your local water treatment specialist for proper sizing and replacement intervals for the carbon block cartridge.**

**[3] If the Chlorides exceed 30 ppm and the oven is used more than 8 hours during the day in steam or combination mode, the cavity will require rinsing every 8 hours. Failure to do so will result in corrosion and rusting of the oven cavity and interior parts. A Reverse Osmosis water treatment system can be installed to eliminate chlorides from the water and reduce the hardness. Preventative washing and rinsing may be needed more than once a day to prevent compounding of contaminants inside cavity.**

**[4] Total Chlorine of 4.0 ppm is the max limit for the building water supply. A carbon block filter must still be used to remove all Chlorine and Chloramines from the water. Failure to do so will result in corrosion and rust in the cooking cavity, which is not covered under warranty.**

## SPECIFICATIONS

**Electric**
120VAC/60HZ/1 phase (proper ground required).

**NOTE:** Do not connect this unit to a ground-fault circuit-interrupter (GFCI) 125-volt, single-phase, 15- and 20-ampere receptacle. Electronic burner ignition systems are prone to nuisance tripping and possible ignition failure.

**Gas Pressures**

| **Gas Supply Pressure*** | |
|---|---|
| Natural | 7.0" - 10.5" W.C. |
| Propane | 11.0" - 13" W.C. |
| *** Maximum supply pressure can not exceed 14" W.C. (1/2 psig).** | |
| **Gas Manifold Pressure** | |
| Natural | 2.5" W.C. |
| Propane | 10.0" W.C. |
| Blower Air Pressure<br>**NOTE:** Blower settings are only made on units up to serial number 463024849, soloranics burner is not adjustable. | 0.35" W.C. - Cold<br>.45" W. C. - Hot |

| **Burner Pressure**** | |
|---|---|
| Hot | .4" to .5" WC. |
| Cold | .33" to .35" WC |
| **** The blower air pressure reading will be higher when the steam generator is hot vs cold. If the steam generator has been on for 15 minutes or more, the operating condition is considered hot. 24 volt transformer needs to be disconnected when checking blower speed settings.** | |

## TOOLS

**Standard**

- Standard set of hand tools.
- VOM with minimum of NFPA-70E CATIII 600V, UL/CSA/TUV listed. Sensitivity of at least 20,000 ohms per volt and the ability to measure DC micro amps. Meter leads must also be rated at CAT III 600V.
- Temperature tester (thermocouple type).
- Manometer.
- Gas leak detection equipment. (Must be resistant to reaction of propane gas).
- Clear silicone sealant.

**Special**

- Requires U-inclined (Grainger P/N 3T294) or digital (Grainger P/N 4JZ78) manometer capable of reading in 0.01" WC increments. Used for measuring gas manifold pressures and blower air pressures.
- RTV 109 for securing gasket to door.
- Loctite® 271.
- Screwdriver, 1/8 X 4 cabinet tip.
- Scale Release PN 854893-13 (14 oz).
- SPS620V Red Filter Head (Kit P/N 854306-00013).
- SMF620 Black Head (Kit P/N 857487-00620).
- Combustion analyzer needed for Soloronics burner assembly set up procedures.
- Pressure Gauge Assembly
    - Low Pressure Gauge - 0 to 5 psi. recommended (Grainger Part No. 2C641).
    - Water Hose Coupling - swivel type (Grainger Part No. 4KG87).
    - Reducer Bushing (Grainger Part No. 6MN61).

- Pipe thread sealant (as required).

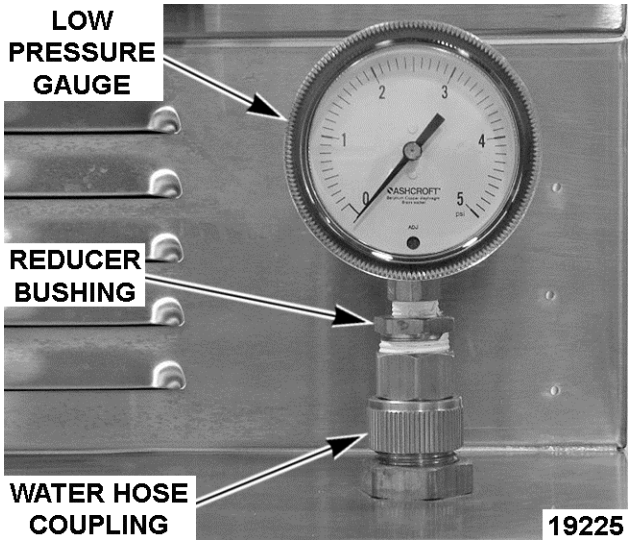


**Fig. 1**

- Pressure gauge and fittings to check inlet water pressure for condensate connection.

# REMOVAL AND REPLACEMENT OF PARTS

## COVERS AND PANELS




**⚠ WARNING**

**Disconnect the electrical power to the machine and follow lockout / tagout procedures.**

**Cooking Compartment Side Panels**

**NOTE:** Removal of left side panel is identical to the procedure for the right side panel.

1. Remove the screws then remove the side panel from the compartment.

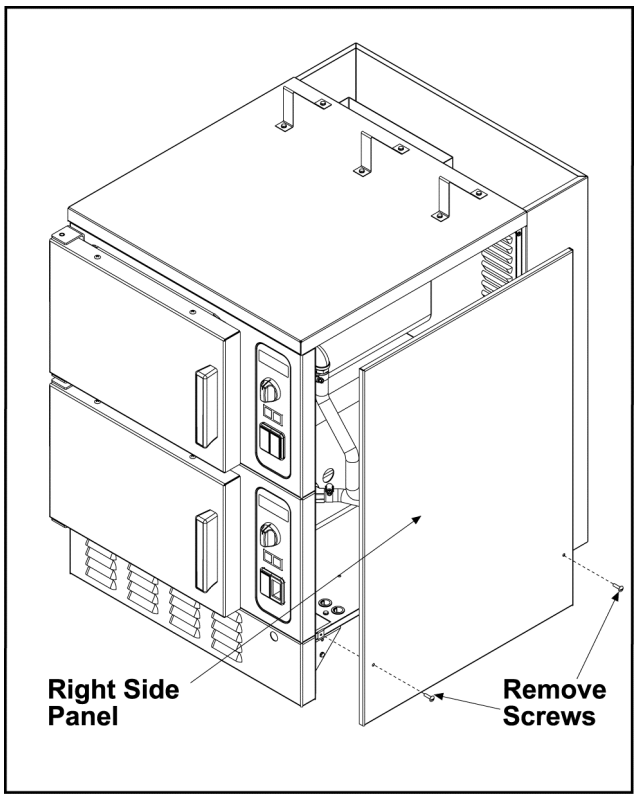


**Fig. 2**

**Cooking Compartment Flue Wrap**

1. Remove left and right side panels from compartment. Remove screws that secure flue wrap.

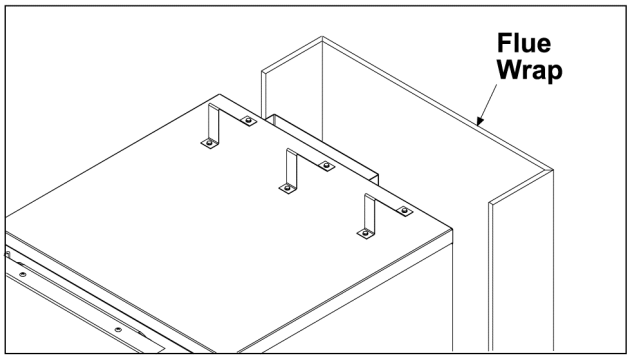


**Fig. 3**

**Cabinet Base Right Side Panel**

1. Remove the screws then remove the right side panel from the cabinet base.

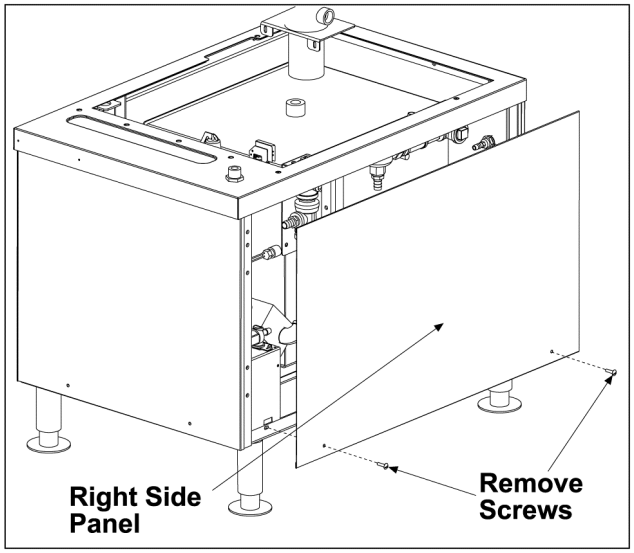


**Fig. 4**

**Cabinet Base Left Side Panel**

1. Remove the screws then remove the left side panel from the cabinet base.

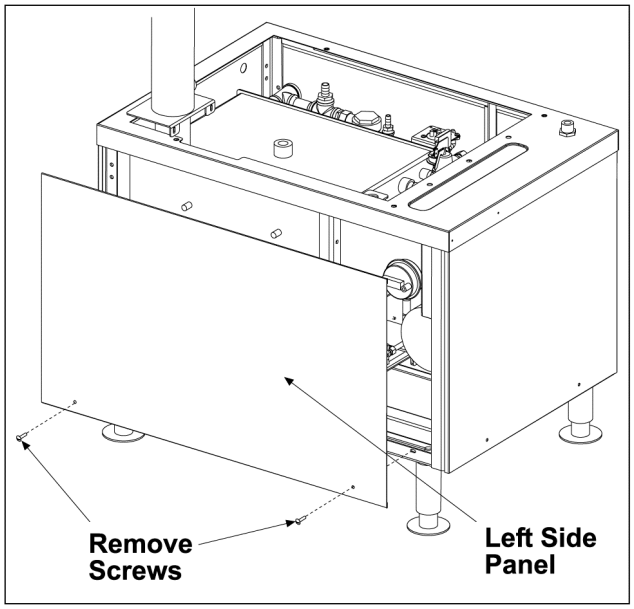


**Fig. 5**

**Cabinet Base Front Panel**

1. Remove the screws then remove the front panel from the cabinet base.

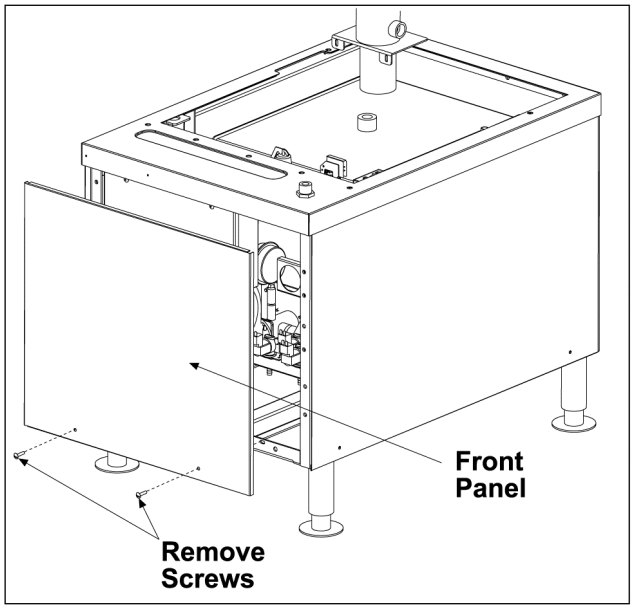


**Fig. 6**

**Cabinet Base Rear Panel**

**NOTE:** Electrical components are connected to the rear panel. Be prepared to note wires and disconnect when removing rear panel.

1. Remove the screws then remove the rear panel from the cabinet base.

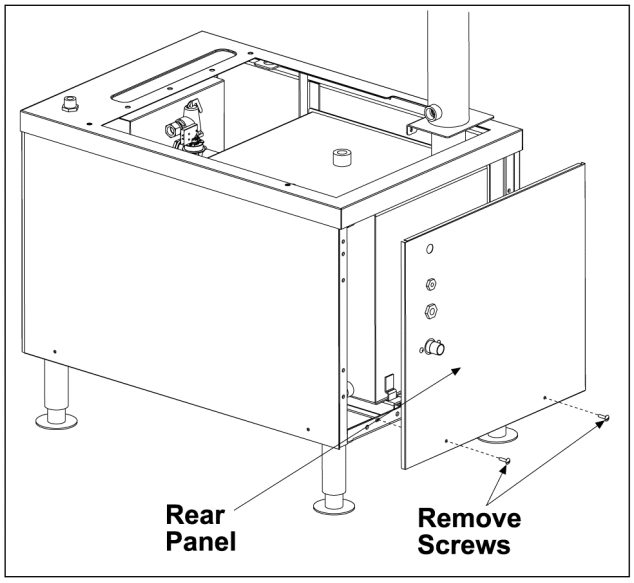


**Fig. 7**

## COMPARTMENT CONTROLS-OLD




**⚠ WARNING**

**Disconnect the electrical power to the machine and follow lockout / tagout procedures.**

1. Remove compartment right side cover as outlined under COVERS AND PANELS.
2. Remove the component being replaced.
3. Reverse the procedure to install the replacement component, then check steamer for proper operation.

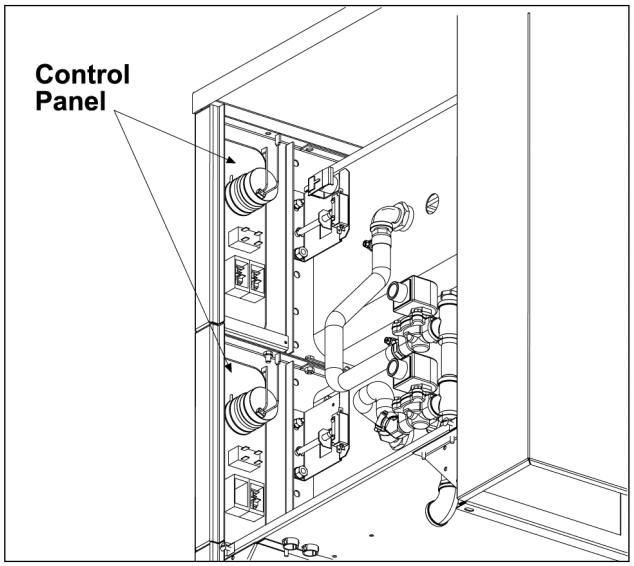


**Fig. 8**

## COOKING COMPARTMENT DOOR

**Removal**

1. Close Door.
2. Remove compartment left SIDE PANEL.
3. Remove nuts from top door support bracket.

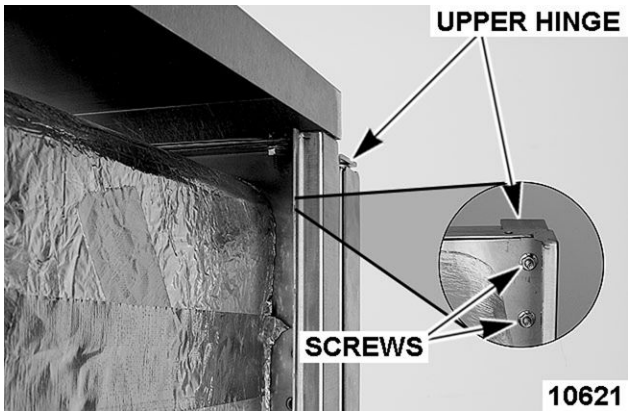


**Fig. 9**

4. Open door slightly, and while holding door, pull upper hinge away from front panel.
5. Pull upper hinge out of upper door hinge bushing.
6. Lift door assembly up and off lower door hinge.
7. Reverse the procedure to install and check for proper operation.
8. Reinstall parts removed in reverse order of removal.
9. Check door for fit and proper sealing of gasket.

**Gasket**

1. Open the door.
2. Remove the shoulder screws and pan pusher bracket from gasket plate.

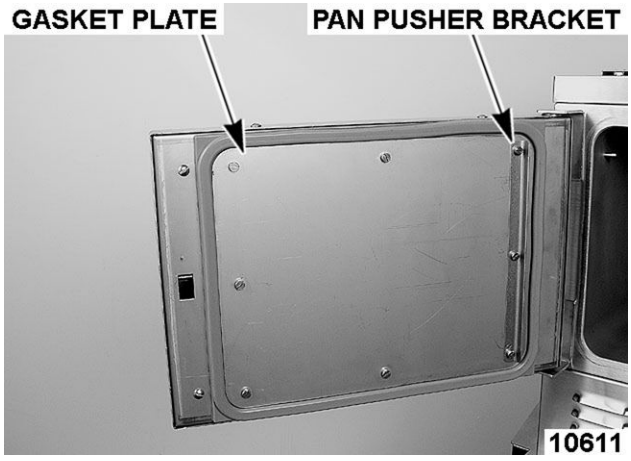


**Fig. 10**

3. Remove the gasket plate.
4. Remove gasket from inner door panel.
5. Remove RTV from bottom part of inner door panel. Apply new RTV 109 to bottom of door where shown when assembling gasket to door.
6. Place a small amount of RTV109 into the inner door panel gasket screw holes before assembly.
7. Position the new gasket on gasket plate and reverse procedure to install

**NOTE:** Damage to the gasket sealing surface, such as nicks or cuts, will cause steam leakage.

**Handle Removal**

1. Open the door.
2. Remove screws from the top and bottom of the door.

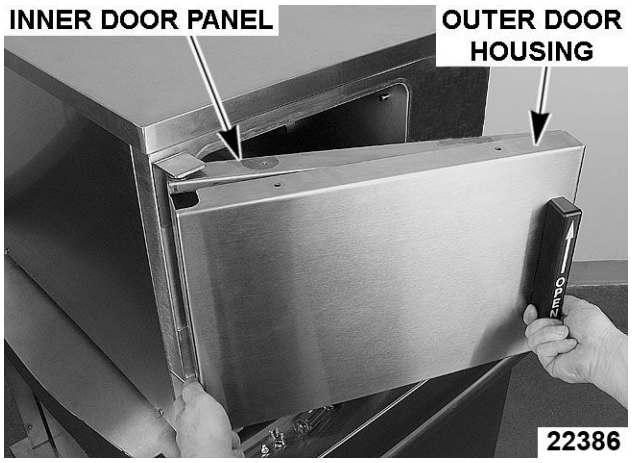


**Fig. 11**

3. Pull outer door housing away from inner door panel starting at the hinge side of door to separate the door halves.
4. Remove lock nuts and stepped spacers from threaded studs of door handle.

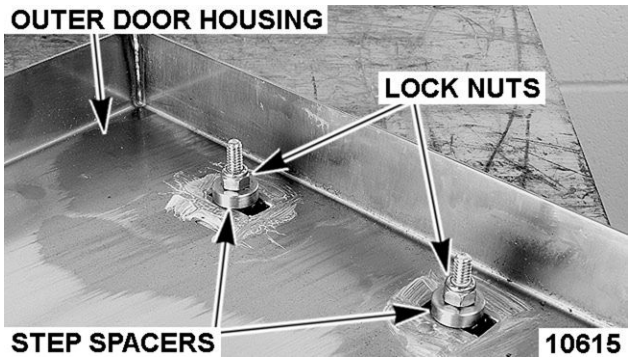


**Fig. 12**

5. Reverse procedure to install. When installing the spacers, the smaller diameter fits into the slot in the door and the latch. Use Loctite 271 to secure fasteners.

**Handle Installation**

1. Apply Lubriplate 630AA around slots of outer door housing where step spacers contact housing.
2. Install door handle into outer door housing such that hinge side of door housing is to the left and arrow on handle is pointed upward.
3. Install step spacer with smaller radius toward handle and door housing. Smaller radius is a slip fit with outer door housing slot.

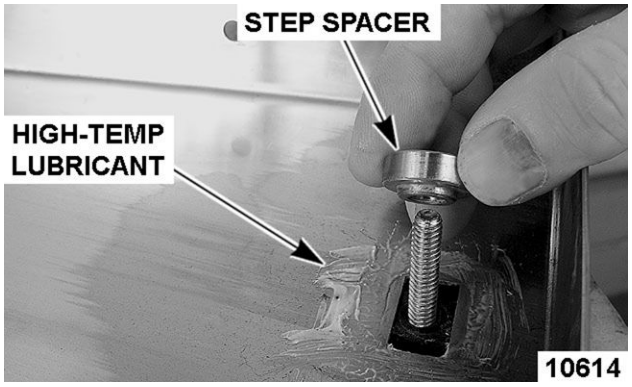


**Fig. 13**

4. Install lock nuts and tighten until no gap exists between handle, step spacer and lock nut. Do not over-tighten lock nuts.
5. Close inner door panel so that latch mechanism engages striker on front panel.
6. Install outer door housing onto inner door panel.
7. Align the top and bottom screw holes of outer door housing with inner door panel.

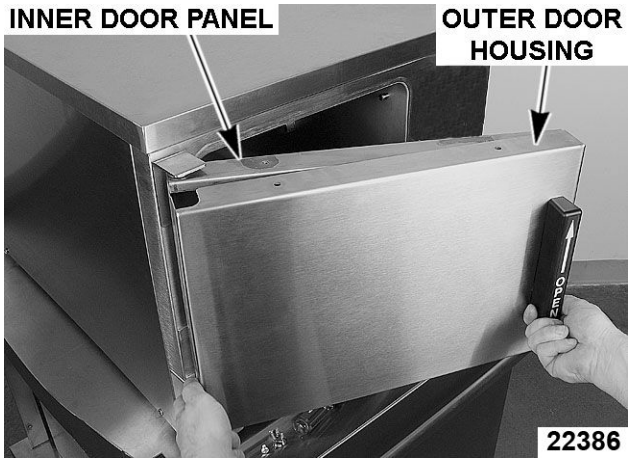


**Fig. 14**

8. Apply Loctite 7471 Primer N and Loctite 242 to threads of screws before assembling.
9. Install screws to secure door halves together.
10. Check opening and closing operation of door.

**Latch Assembly and Removal**

1. Separate outer door housing assembly from inner door panel as outlined under DOOR HANDLE REMOVAL.
2. Remove screws securing latch assembly to inner door panel and remove latch mechanism.

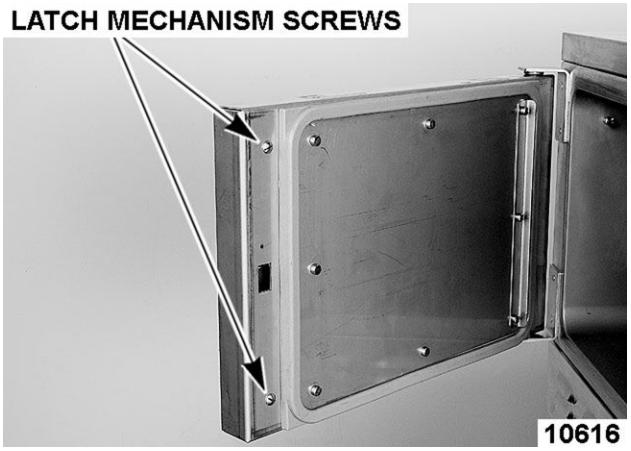


**Fig. 15**

3. Remove E-clip from latch assembly pins and pull pins from latch mechanism.

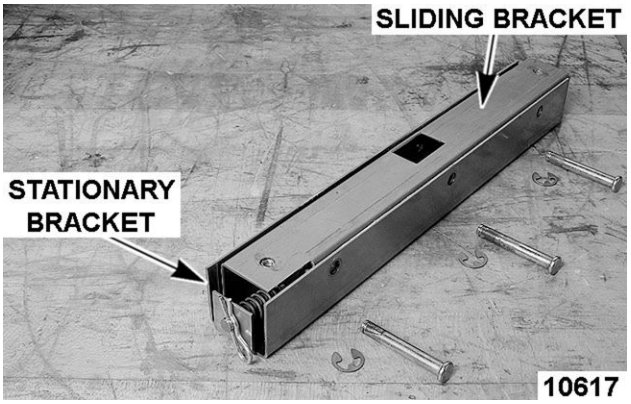


**Fig. 16**

4. Remove retaining pin from spring pin.
5. Separate sliding bracket from stationary bracket.

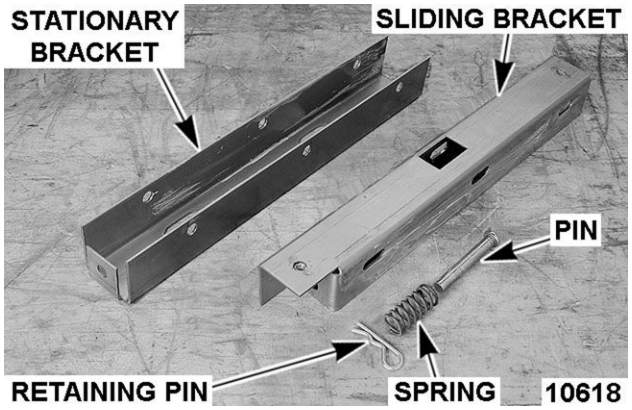


**Fig. 17**

**Latch Assembly**

1. Apply Lubriplate 630AA to sides of sliding bracket.
2. Insert spring pin into bottom of sliding bracket.
   A. Place spring over spring pin.
3. Assemble sliding bracket into stationary bracket.
4. While holding head of spring pin against bottom of sliding bracket, insert spring pin into keeper hole in bottom of stationary bracket.

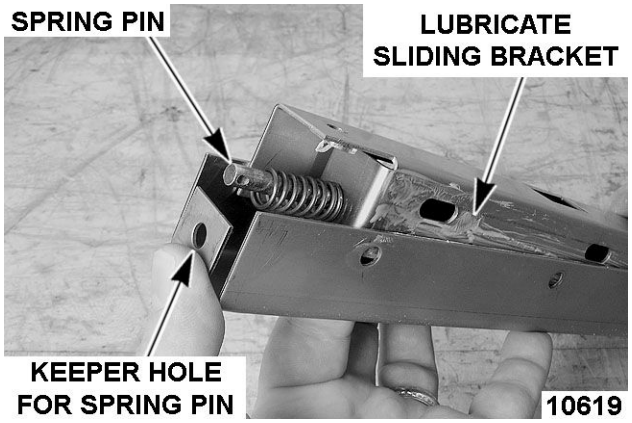


**Fig. 18**

   A. Secure spring pin in place with retaining pin.

**NOTE:** Install pins such that heads of pins will be facing inward toward hinge side of inner door panel when latch assembly is installed.

5. Install pins to assemble stationary and sliding brackets together.
   A. Secure pins into position with E-clip.

**Latch Installation**

1. Install latch assembly onto inner door panel with spring pin toward bottom of door panel.
   A. Apply Loctite 271 to threads of screws before assembly and secure latch assembly to inner door panel.

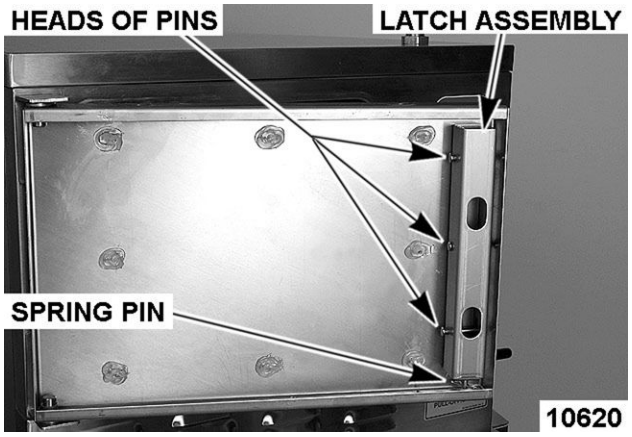


**Fig. 19**

2. Install outer door housing assembly as outlined in DOOR HANDLE INSTALLATION.
3. Check opening and closing operation of door.
4. Check steamer for proper operation and leaks around door seal

**Hinge Bearings**

1. Close door.
2. Remove left SIDE PANEL.
3. Remove nuts from upper hinge located inside front panel.

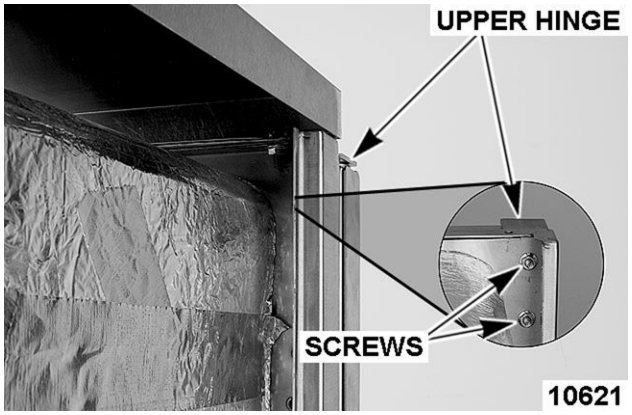


**Fig. 20**

4. Open door slightly, and while holding door, pull upper hinge away from front panel.
5. Pull upper hinge out of upper door hinge bearing.
6. Lift door assembly up and off lower door hinge.
7. Pry hinge bearing out from door assembly.
8. Remove outer door housing.

**NOTICE**

Do not drive bearing into place. The inner door panel could be damaged. Press bearing into position.

**NOTE:** When replacing door hinge bearings, replace both hinge bearings.

9. Position replacement hinge bearing over hinge opening in door assembly.




**Fig. 21**

10. Reassemble parts removed in reverse order.
11. Check door for fit and proper door gasket sealing.

## MAIN BURNER




**⚠ WARNING**

**Disconnect the electrical power to the machine and follow lockout / tagout procedures.**

**NOTICE**

In the previous production (up to serial number 463024849) blower assembly components were separate (gas valve, air pressure switch, blower, and ignition module). Current production blower assembly (starting at serial number 463024850) is one unit and the air pressure switch is not required. The ignition module has changed locations and the wire harness is different. **NOTE** and **VERIFY** all wire connections.

**PREVIOUS PRODUCTION SHOWN IN** Fig. 22

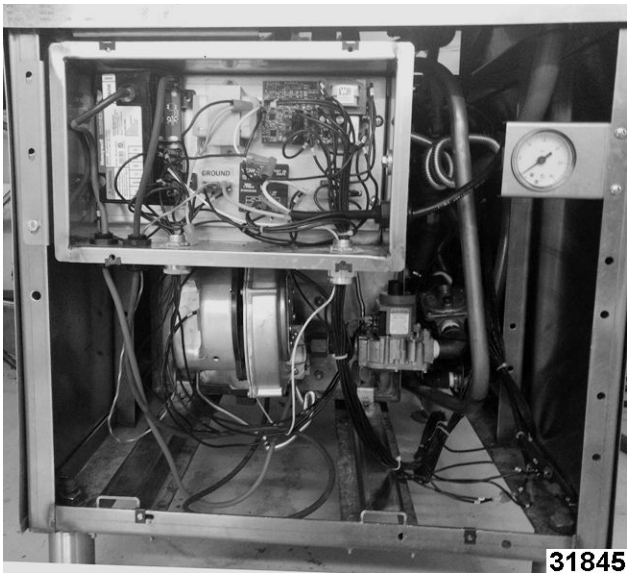


**Fig. 22**

**CURRENT PRODUCTION SHOWN IN** Fig. 23

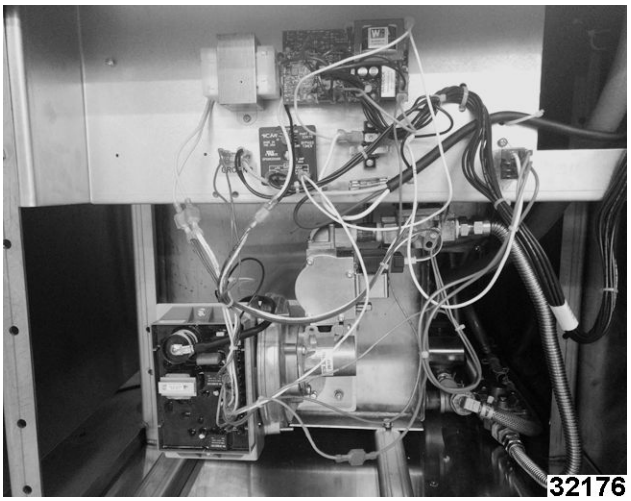


**Fig. 23**

1. Remove front and side covers as outlined under COVERS AND PANELS.
2. Disconnect the gas line at gas combination control valve.

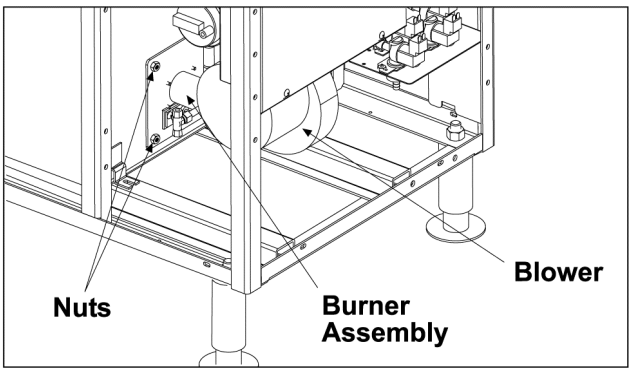


**Fig. 24**

3. Disconnect wires to burner assembly.
4. Remove the nuts securing burner to tank.
5. Drop blower end of burner assembly slightly down to clear control box and push all interfering wires out of the way so that burner can be pulled out of tank.
6. Reverse procedure to install burner assembly.

## GAS COMBINATION CONTROL VALVE




**⚠ WARNING**

**Disconnect the electrical power to the machine and follow lockout / tagout procedures.**




**⚠ WARNING**

**Shut off the gas before servicing the unit and follow lockout / tagout procedures.**

**⚠ WARNING**

**All gas joints disturbed during servicing must be checked for leaks. Check with a soap and water solution (bubbles). Do not use an open flame.**

**A. CHECK ALL JOINTS PRIOR TO THE GAS VALVE (SOLENOID) BEFORE LIGHTING THE UNIT.**

**B. CHECK ALL JOINTS BEYOND GAS VALVE (SOLENOID) AFTER UNIT IS LIT.**

1. Remove FRONT AND RIGHT SIDE PANELS.
2. Remove main burner as outlined in MAIN BURNER.
3. Disconnect electrical supply wires running to gas combination control valve.

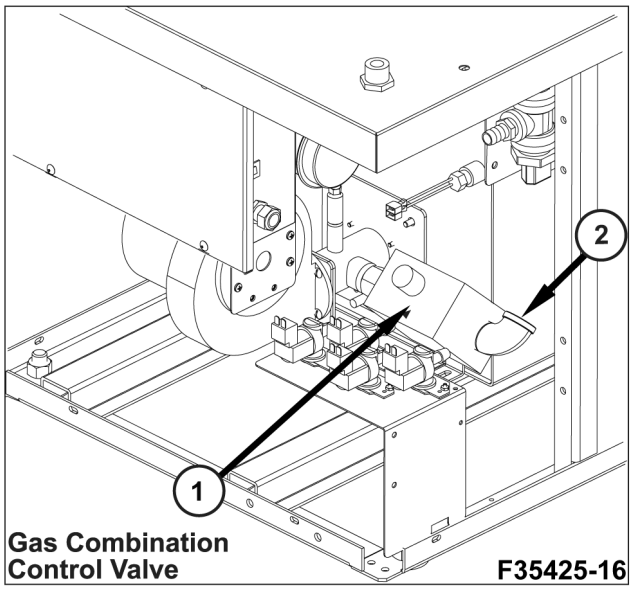


**Fig. 25**

4. Disconnect pilot gas supply tube from control.
5. Disconnect pipe connections on each side of gas combination control valve.
6. Reverse procedure to install.
7. Verify PILOT BURNER ADJUSTMENT (ONLY UNITS WITH ADJUSTABLE PILOT).

**NOTE:** No pilot burner adjustment needed if unit has Solaronics burner assembly.

**ADJUSTABLE PILOT (1, Fig. 26) BURNER SHOWN**

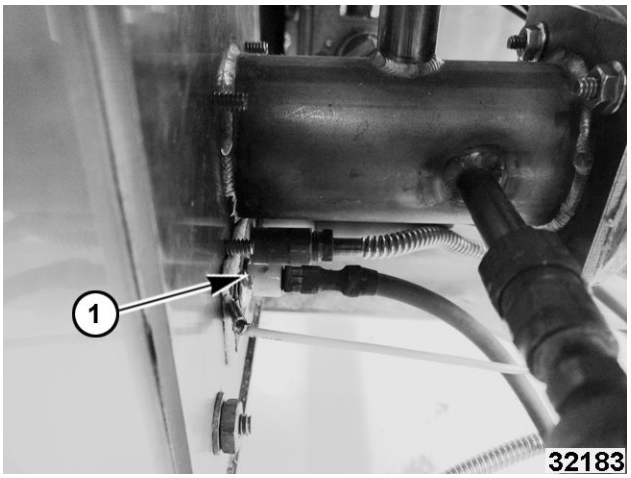


**Fig. 26**

**SOLARONICS BURNER ASSEMBLY (1, Fig. 27) NON-ADJUSTABLE PILOT**

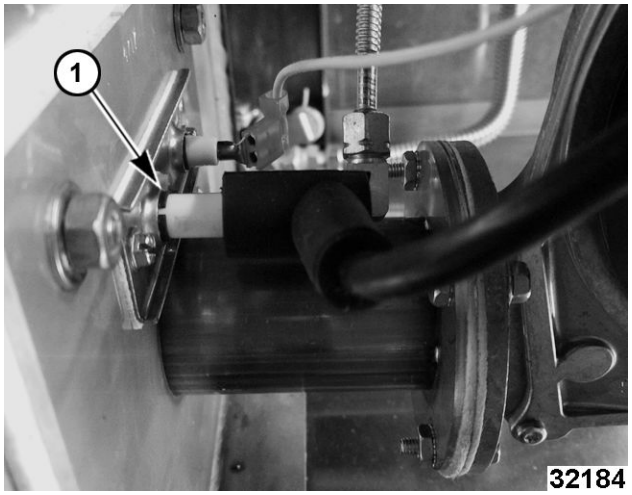


**Fig. 27**

## GENERATOR ASSEMBLY




**⚠ WARNING**

**Disconnect the electrical power to the machine and follow lockout / tagout procedures.**




**⚠ WARNING**

**Shut off the gas before servicing the unit and follow lockout / tagout procedures.**

**⚠ WARNING**

**All gas joints disturbed during servicing must be checked for leaks. Check with a soap and water solution (bubbles). Do not use an open flame.**

A. CHECK ALL JOINTS PRIOR TO THE GAS VALVE (SOLENOID) BEFORE LIGHTING THE UNIT.

B. CHECK ALL JOINTS BEYOND GAS VALVE (SOLENOID) AFTER UNIT IS LIT.

1. Drain the generator and allow steamer to cool, if necessary.

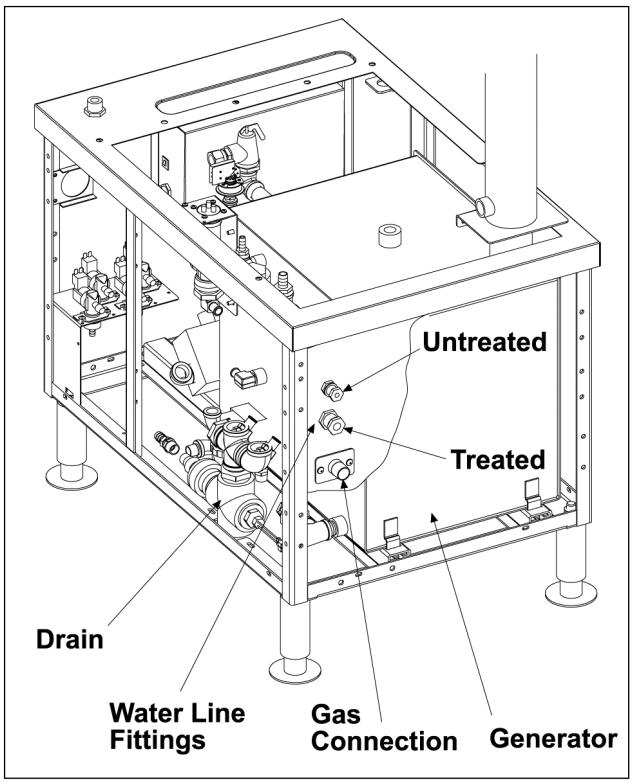


**Fig. 28**

2. Remove rear and side panels.
3. Disconnect gas line at gas combination control valve.

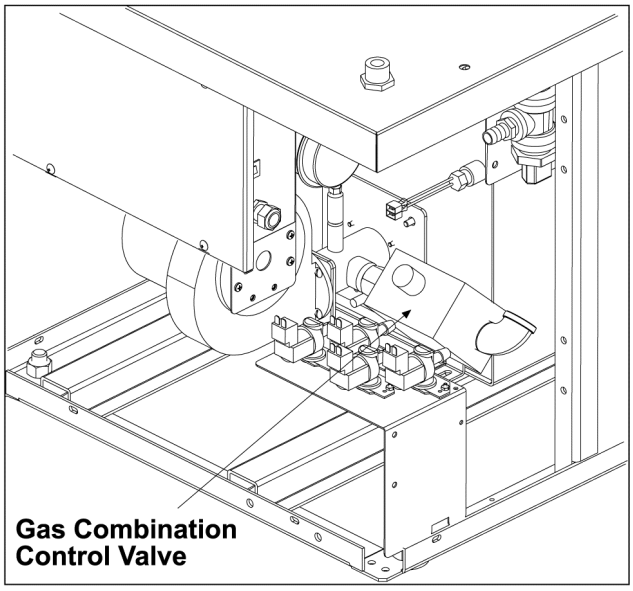


**Fig. 29**

**NOTE:** Earlier production units show in graphics.

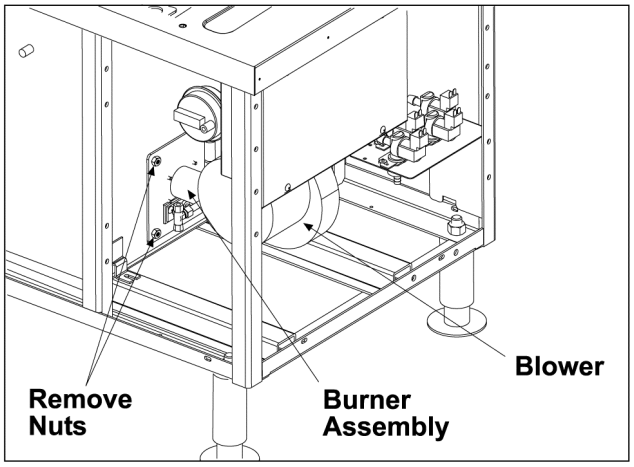


**Fig. 30**

4. Disconnect wires to burner assembly.
5. Disconnect wires from gas combination control valve.
6. Remove the nuts securing the burner to generator.
7. Drop blower end of burner assembly slightly down to clear control box and push all wires out of the way so that burner can be pulled out of tank.
8. Disconnect wires from the operating pressure switch.
9. Loosen hose clamp attaching lower flexible water line at back panel and use a wrench to disconnect barb fitting from main inlet water connection.
10. Loosen hose clamp attaching upper flexible water line at back panel and use a wrench to disconnect barb fitting from main inlet water connection.
11. Remove water line from generator. Remove steam hoses from steam trap and supply to super heater.
12. Disconnect gas tubing from rear panel.
13. Remove steel drain tube at tank.
14. Disconnect union between tank and drain.
15. Loosen cable clamp screws securing electrical cable at rear panel so that cable is free to move.
16. Remove screws to free super heater and lift super heater off flue pipe, if applicable.

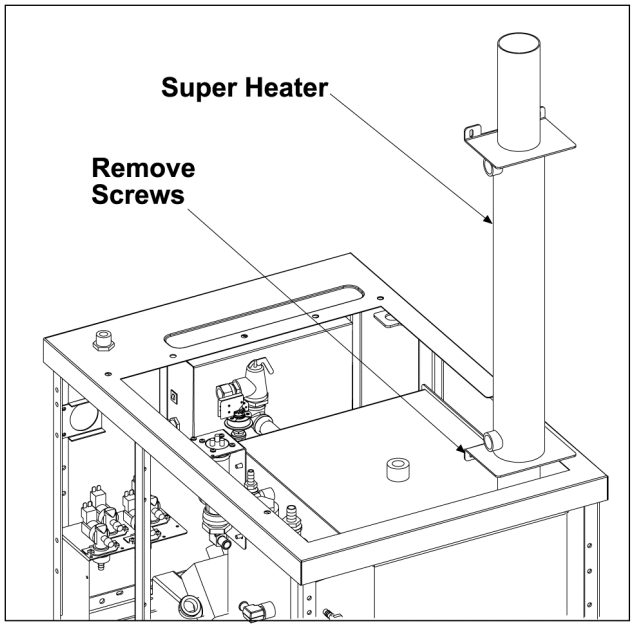


**Fig. 31**

17. Rotate pressure relief valve coupling to allow pressure relief valve to be rotated about 90° so that valve is below generator top level.
18. Remove pressure switch from generator.

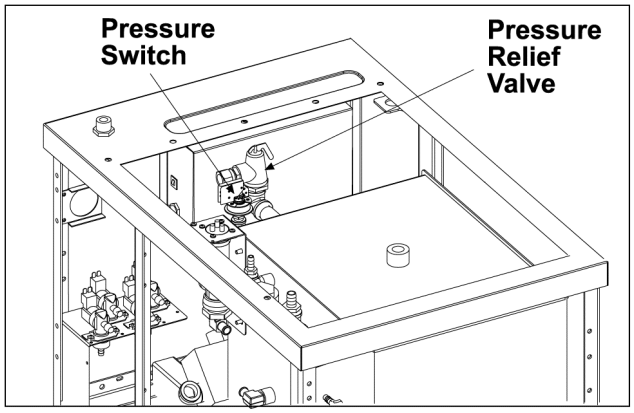


**Fig. 32**

19. Remove bolts attaching front of generator to frame.

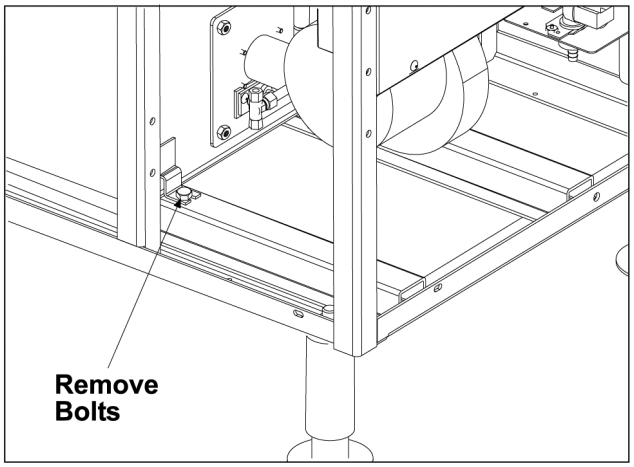


**Fig. 33**

20. Move any interfering components out of the way, then push generator slightly forward to disengage feet and remove generator from rear of cabinet.
21. Reverse procedure to install generator.

## FILL AND COLD WATER SOLENOID VALVES




**⚠ WARNING**

**Disconnect the electrical power to the machine and follow lockout / tagout procedures.**

1. Turn off water supply to steamer.
2. Remove FRONT AND SIDE COVERS.

**PREVIOUS PRODUCT SHOWN**

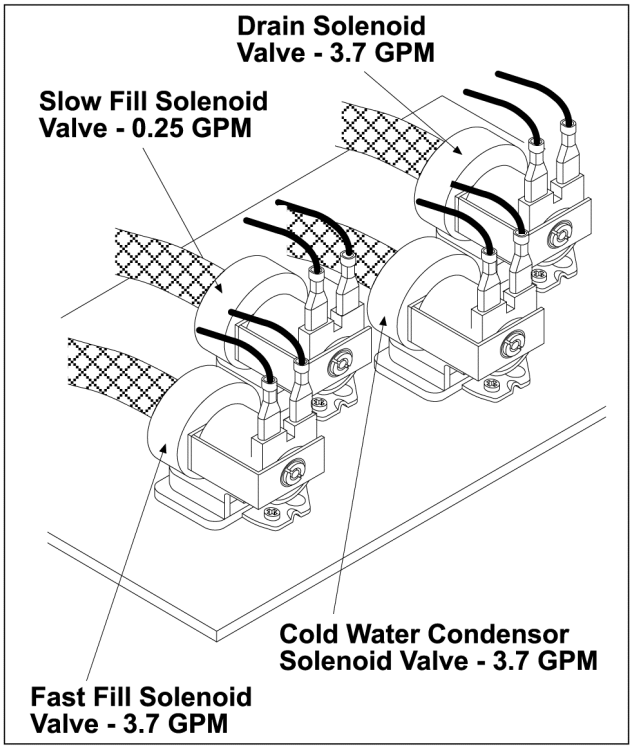


**Fig. 34**

3. Pull quick connect power leads off solenoid valve being serviced.
4. Disconnect water lines to solenoid valve being serviced and remove solenoid valve from unit.

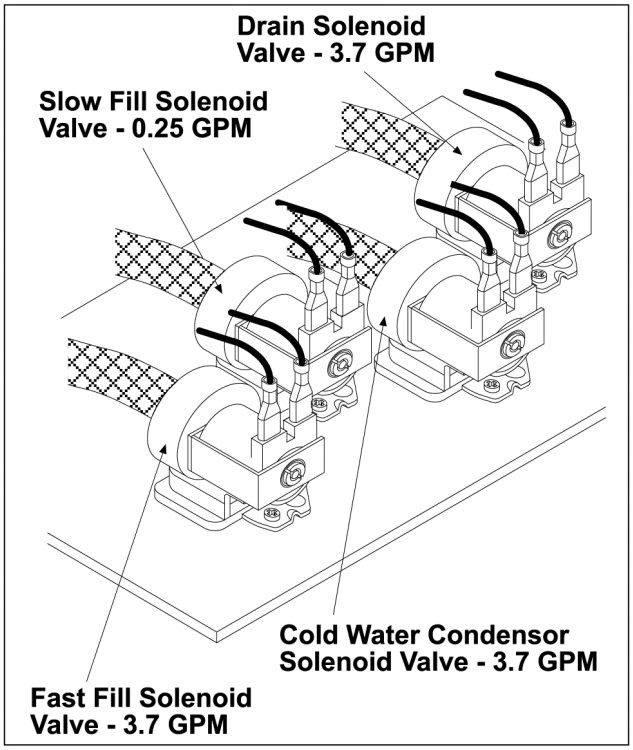


**Fig. 35**

**CURRENT PRODUCTION SHOWN**

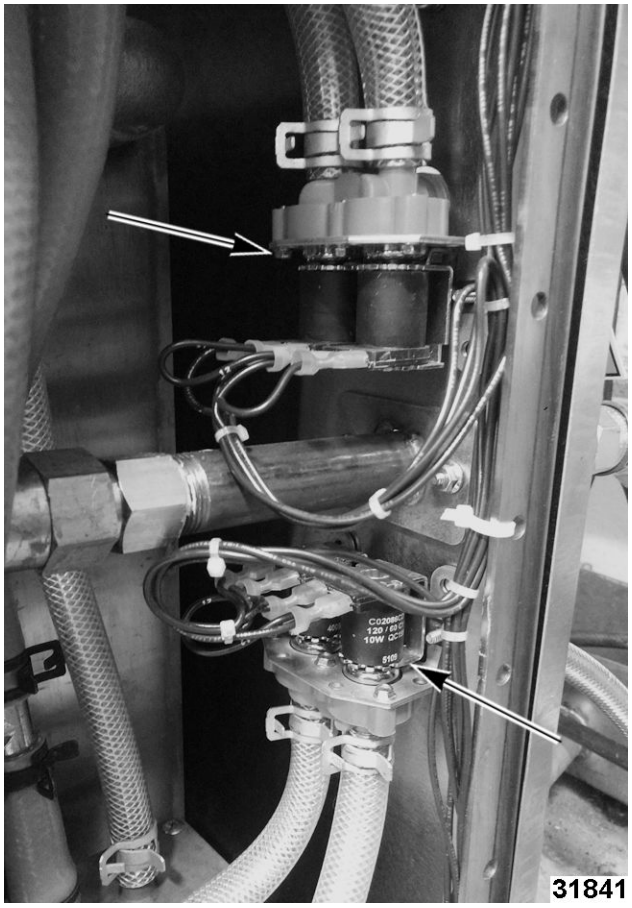


**Fig. 36**

5. . Reverse procedure to install solenoid valve.

## PILOT/SPARK PROBE FLAME SENSOR (ONLY UNITS WITH ADJUSTABLE PILOT)




**⚠ WARNING**

**Shut off the gas before servicing the unit and follow lockout / tagout procedures.**

**NOTE:** Only for units with adjustable pilot burner.

**ADJUSTABLE PILOT BURNER (1)**

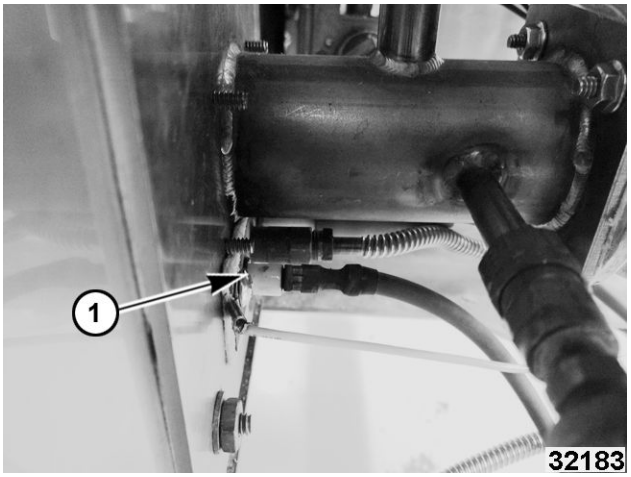


**Fig. 37**

**SOLARONICS BURNER ASSEMBLY (1) NON-ADJUSTABLE PILOT**

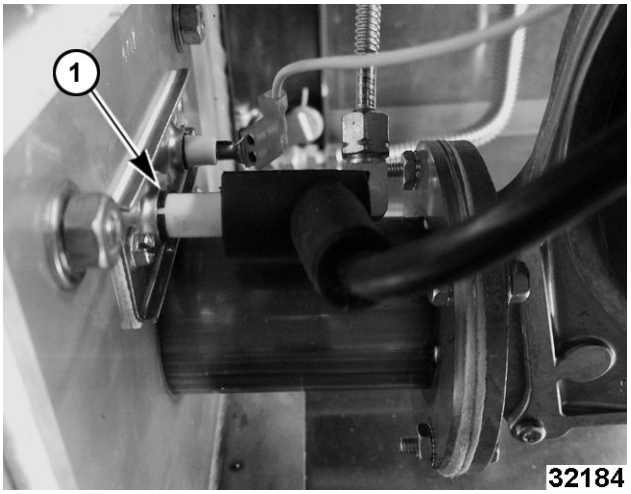


**Fig. 38**

1. Remove MAIN BURNER ASSEMBLY.
2. Disconnect gas tube from pilot burner and remove pilot assembly screws.

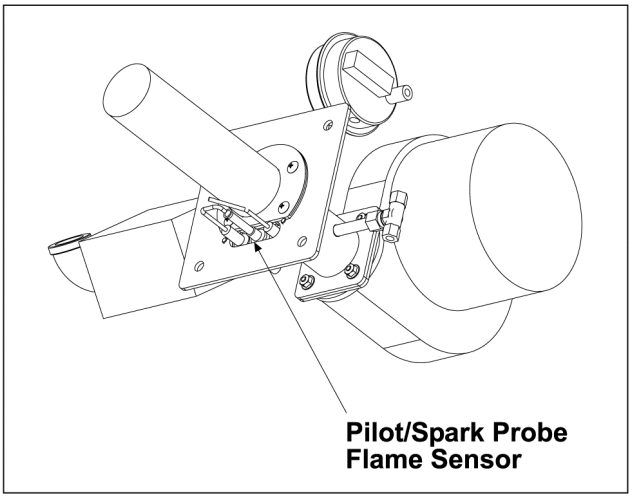


**Fig. 39**

3. Replace malfunctioning flame sensor or pilot assembly.
4. Reverse procedure to install a new flame sensor or pilot assembly.
5. Check for proper operation.

## BLOWER CONTROL RELAY (K3)




**⚠ WARNING**

**Shut off the gas before servicing the unit and follow lockout / tagout procedures.**




**⚠ WARNING**

**Disconnect the electrical power to the machine and follow lockout / tagout procedures.**

**NOTE:** Starting with production Serial No. 463008610 and higher will have blower control relay (K3) installed. C24GA 6&10 production gas steamers will begin using a blower control relay (K3) to carry blower motor current instead of the operating pressure switch contacts.

**NOTICE**

K3 relay must be installed into earlier production units that are having a Solaronics burner assembly installed.

**NOTE:** K3 relay has been used since April 2013 on units with serial number 463008610 and higher.

**ADJUSTABLE PILOT BURNER (1)**

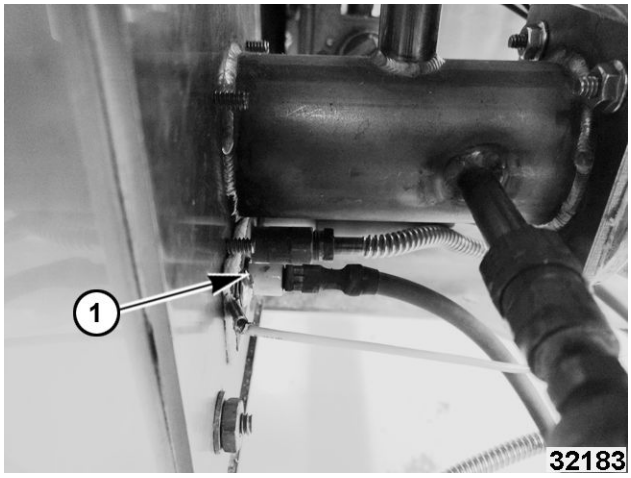


**Fig. 40**

**SOLARONICS BURNER ASSEMBLY (1) NON-ADJUSTABLE PILOT**

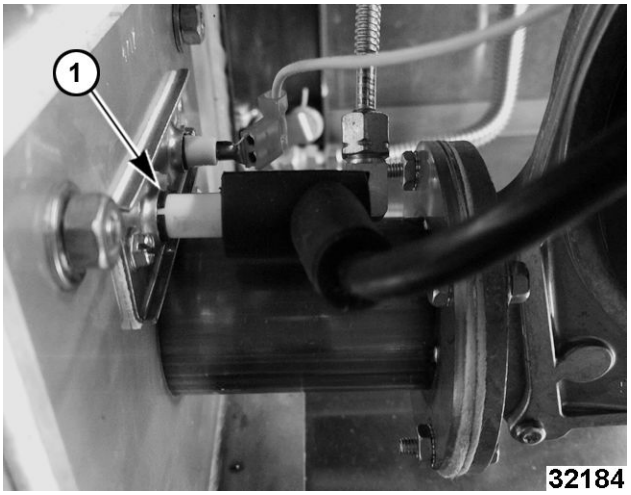


**Fig. 41**

1. Remove CABINET BASE FRONT PANEL.
2. Locate blower control relay (K3) in front of steamer base.
3. Note and disconnect lead wires from relay terminals.
4. Remove (2) mounting screws.

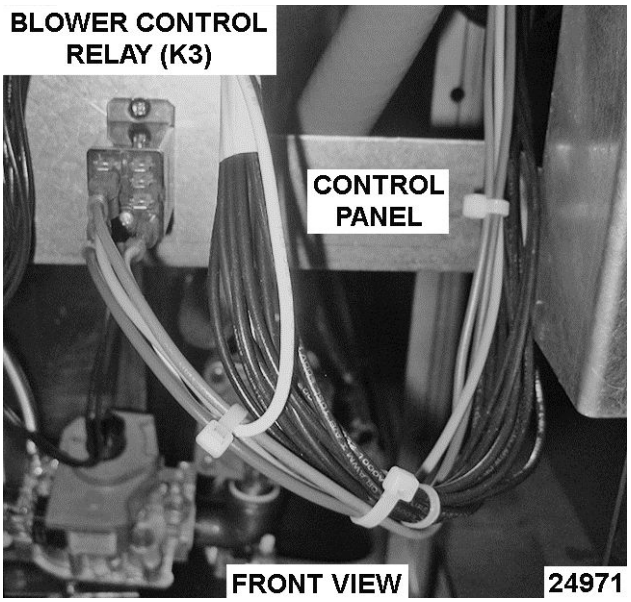


**Fig. 42**

5. Reverse procedure to install and check for proper operation.

# SERVICE PROCEDURES AND ADJUSTMENTS




**⚠ WARNING**

**Certain procedures in this section require electrical test or measurements while power is applied to the machine. Exercise extreme caution at all times and follow Arc Flash procedures. If test points are not easily accessible, disconnect power and follow Lockout/Tagout procedures, attach test equipment and reapply power to test.**

## BLOWER AIR PRESSURE ADJUSTMENT (ONLY UNITS WITH ADJUSTABLE PILOT)

**NOTE:** This adjustment requires a U-inclined or digital manometer capable of reading in 0.01" WC increments to make the proper blower air pressure adjustments. If the required manometer is not available, do not proceed with the adjustments.




**⚠ WARNING**

**Shut off the gas before servicing the unit and follow lockout / tagout procedures.**

**NOTE:** Only for units with adjustable pilot burner.

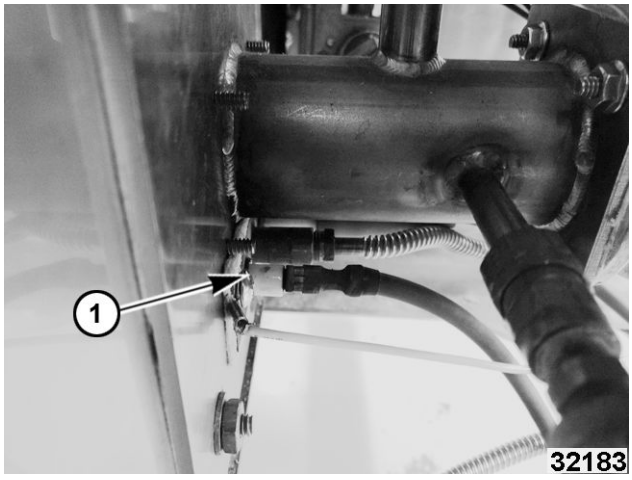


**1st GENERATION ADJUSTABLE PILOT BURNER (1)**

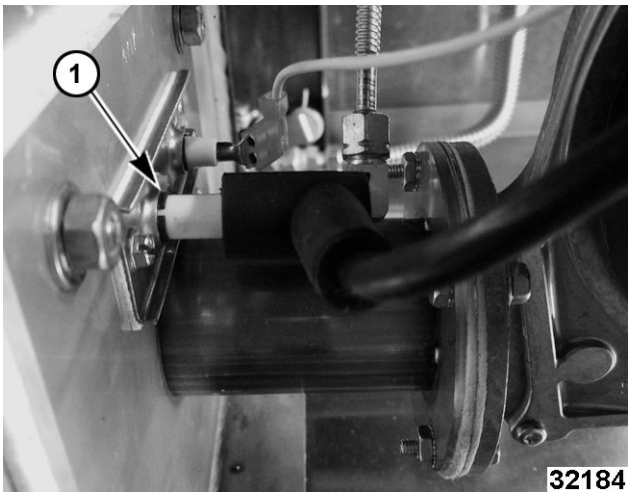


**2nd GENERATION DSI (1) NON-ADJUSTABLE PILOT**

**Blower Air Pressure (COLD)**

**NOTE:** Initial adjustment of blower air pressure should only be made from a cold starting condition.

1. Turn gas supply off.
2. Remove Cabinet Base Front Panel.
3. Remove plug on the outlet side of gas valve and install manometer. Refer to Fig. 45.

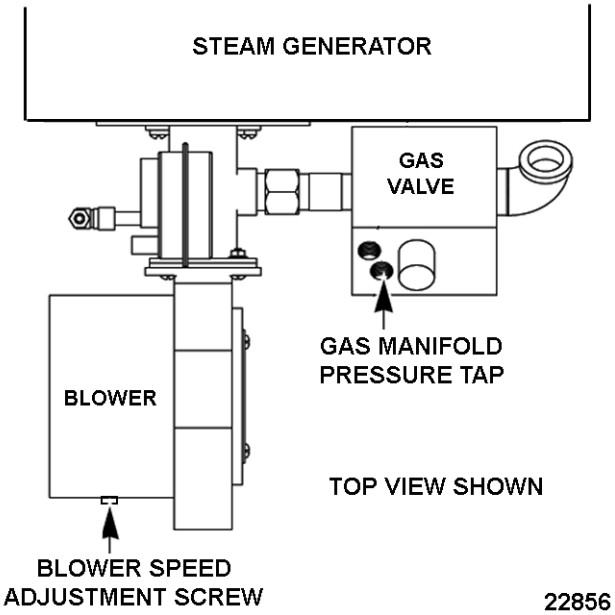


**Fig. 45**

4. **Disconnect 24VAC transformer** lead wire.

   **NOTICE**

   Disconnecting 24 VAC transformer lead wire will prevent ignition sequence from starting when power switch is on.

5. Verify manometer reading is zero.

   **NOTE:** If ignition module is powered up when checking blower settings it will also affect the blower speed.

6. **On Older Machines Only,** to access blower speed adjustment screw:

   A. Remove 4 screws securing blower shroud to blower.

   B. Re-install screws only and continue with next step.

7. Connect power to machine and turn main power switch on.
8. Allow steam generator to fill (approximately 3 to 5 minutes).

   **NOTE:** When water level reaches the low level cut off probe (LLCO) the blower will turn on but ignition module will not begin sparking to light main burner.

9. Check blower air pressure.

   - Reading should be 0.33" to 0.35" WC (cold). If pressure is not correct, adjust blower speed potentiometer as necessary to achieve correct pressure (clockwise to increase, counterclockwise to decrease).

10. Disconnect power from machine. Leave power switch on to prevent steam generator from draining.

    A. Connect 24 VAC transformer lead.

    B. Turn gas supply on and connect power to machine (ignition sequence will immediately start). If ignition module has status LED(s), the ignition sequence can be monitored via LED flash codes.

C. Allow main burner to light. If main burner does not light within 90 seconds, turn power switch off. Wait 5 minutes before re-lighting.

D. Repeat until main burner lights.

**NOTICE**

If main burner continues not to light, check AIR PRESSURE SWITCH ADJUSTMENT (ONLY UNITS WITH ADJUSTABLE PILOT). Adjustment of air pressure switch should only be made when machine cold.

11. Verify manifold gas pressure is 2.5" WC (nat) or 10.0" WC (propane). Adjust pressure setting as necessary (clockwise to increase, counterclockwise to decrease).

**NOTICE**

If manifold pressure cannot be set correctly, verify gas supply pressure to machine. If machine has pressure regulator installed in the supply line to gas valve, perform pressure adjustments.

**Blower Air Pressure (HOT)**

1. Allow steam generator to operate for at least 15 min. (to verify settings when hot & fine tune if necessary).
2. Disconnect power from machine.
3. Leave power switch on to prevent steam generator from draining.
4. Disconnect 24VAC lead wire from ignition module.
5. Verify manometer reading is zero.
6. Connect power to machine. The blower will turn on but ignition module will not begin sparking to light main burner.
7. Check blower air pressure .
   - Reading should be 0.40" to 0.50" WC (hot). If pressure is not correct, adjust the blower speed potentiometer to achieve 0.45" WC (clockwise to increase, counterclockwise to decrease).
8. Disconnect power from machine. Leave power switch on to prevent steam generator from draining.
9. Connect 24 VAC lead wire to ignition module.
10. Connect power to machine. Ignition sequence will immediately start and main burner will light. If ignition module has status LED(s), the ignition sequence can be monitored via LED flash codes.
11. Verify manifold gas pressure did not change.
12. Disconnect power and turn gas supply off. Remove manometer and install pipe plug on gas valve manifold pressure port.
13. Install blower shroud.
14. Reconnect power and turn gas supply on.
15. Steamer is ready for use.

## DSI BURNER ADJUSTMENT

1. Remove RIGHT SIDE PANEL.
2. Check incoming gas pressure to solenoid valve.
   A. Loosen screw with flat head screwdriver (1, Fig. 46) to open pressure tap.

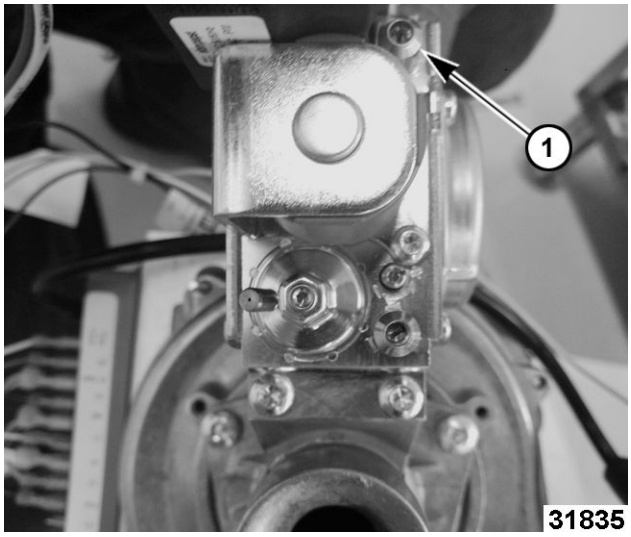


**Fig. 46**

B. Use manometer to measure incoming gas.

- Natural Units- 5" W.C.
- Propane Units - 10" W.C.

C. Gas pressure adjustments are to be made at the pressure regulator.

D. Turn adjustment screw (1, Fig. 47) all the way in until it bottoms out.

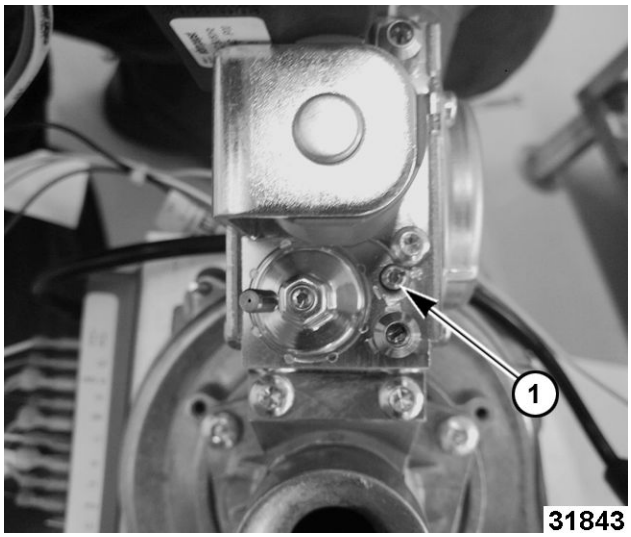


**Fig. 47**

E. Back adjustment screw out.

- Natural Units - 6 to 6 ½ Turns.
- Propane Units - 5 to 5 ½ Turns.

3. Check solenoid on/off switch to verify it is in the ON (Fig. 48) position.

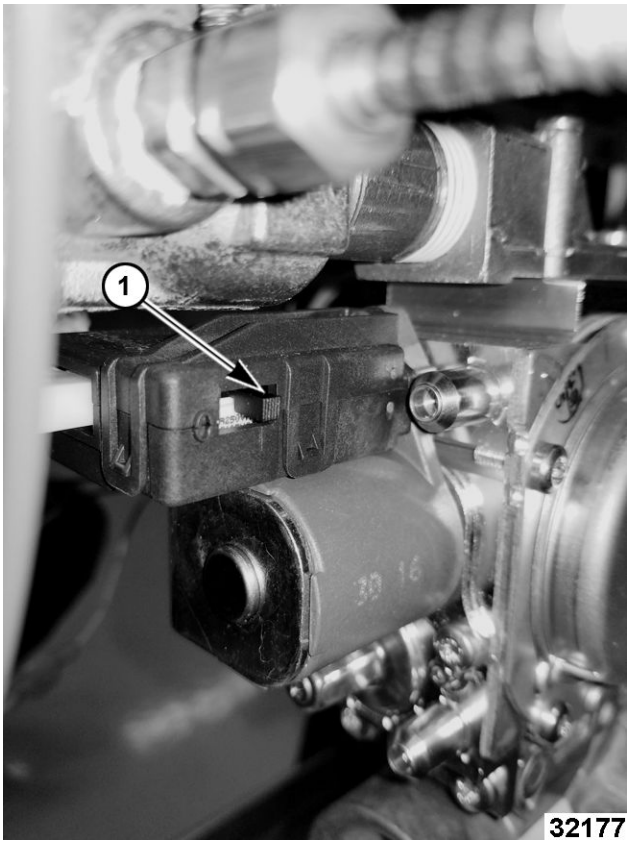


**Fig. 48**

4. Analyze combustion.

A. Insert analyzer (1, Fig. 49) into exhaust flue (2, Fig. 49) as shown.

**NOTICE**

Analyzer wand must be in center of exhaust flue and at least 2" down into flue.

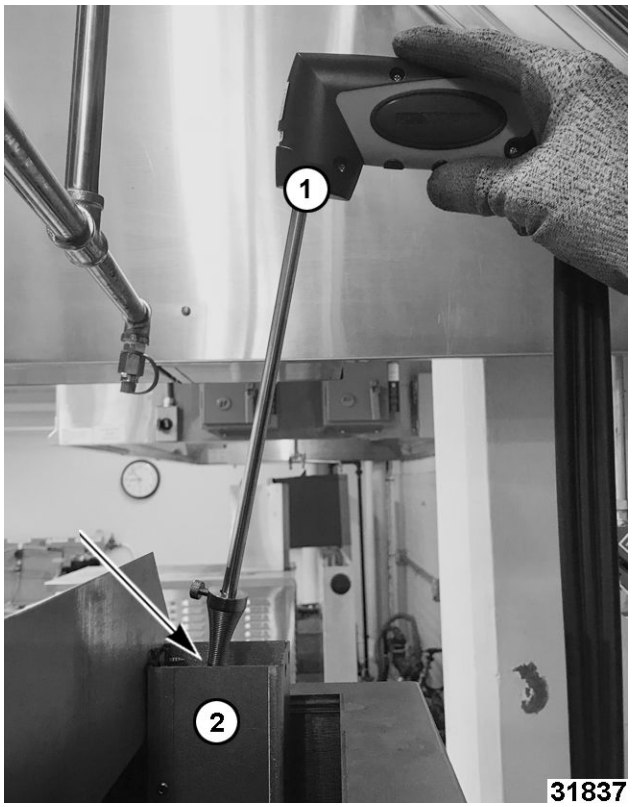


**Fig. 49**

B. Verify requirements.

| Burner Combustion Requirements | | |
|---|---|---|
| **Measure** | **Natural Gas** | **Propane Gas** |
| Supply Pressure | 7.0" to 10.5" W.C. | 11.0" to 13.0" W.C. |
| CO2 Percentage | 7.0% (+/- 0.5%) | 8.0% (+/-0.5%) |
| CO (ppm, Air Free) | Less than 100 ppm | Less than 100 ppm |

C. Turn gas valve adjustment screw clockwise or counterclockwise to achieve burner combustion requirements.

D. Install side panel.

E. Verify operation.

## HSI BURNER




**⚠ WARNING**

**Certain procedures in this section require electrical test or measurements while power is applied to the machine. Exercise extreme caution at all times and follow Arc Flash procedures. If test points are not easily accessible, disconnect power and follow Lockout/Tagout procedures, attach test equipment and reapply power to test.**

**⚠ WARNING**

**All gas joints disturbed during servicing must be checked for leaks. Check with a soap and water solution (bubbles). Do not use an open flame.**

1. Check incoming gas pressure to solenoid valve.

   A. Use manometer to measure incoming gas.

   - Natural Units - 5" W.C. Dynamic Pressure.
   - Propane Units - 10" W.C Dynamic Pressure.

**NOTICE**

These are European pressure taps for testing the inlet and the outlet pressure. The M5 thread screw should not be removed. Screw can be loosened and then a tight fitting hose is put over the cylinder. Outlet pressure screws should not be removed per the manufacturer.

**NOTE:** No adjustments can be made on the gas valve, if gas pressure adjustments need to be made, they are to be made at the regulator.

B. Loosen and put a hose over it (1, Fig. 50).

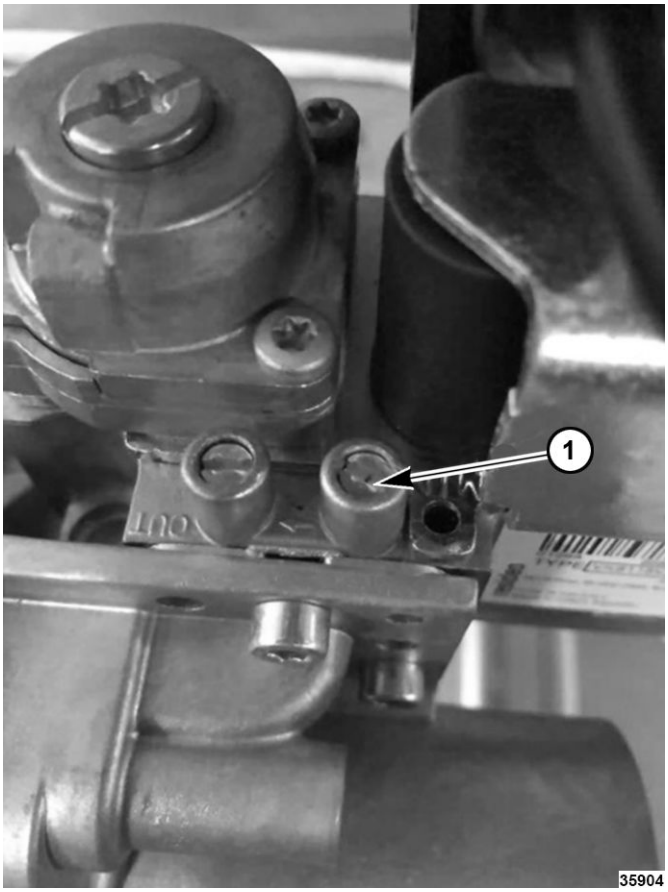


**Fig. 50**

**Analyze Combustion**

A. Remove cap over throttle screw (Fig. 51).

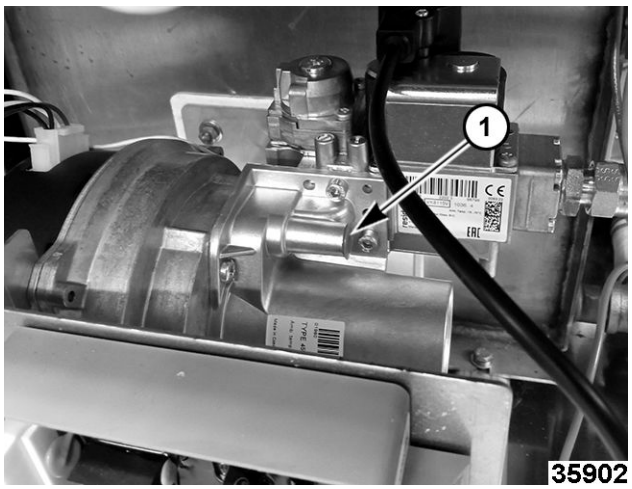


**Fig. 51**

B. Burner Combustion Analysis.

**Throttle Screw Adjustment, (1, Fig. 52)**

- Turn clockwise to lower CO2%.
- Turn counterclockwise to raise CO2%.

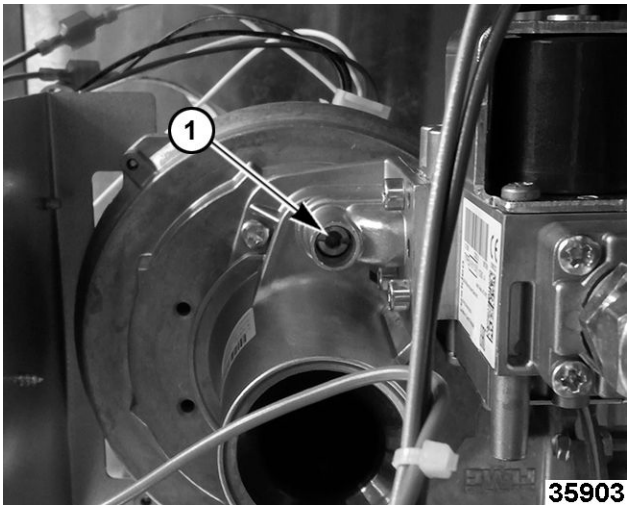


**Fig. 52**

C. Insert analyzer (1, Fig. 53) into exhaust flue (2, Fig. 53) as shown.

**NOTICE**

Analyzer wand must be in center of exhaust flue and at least 2" down into flue.

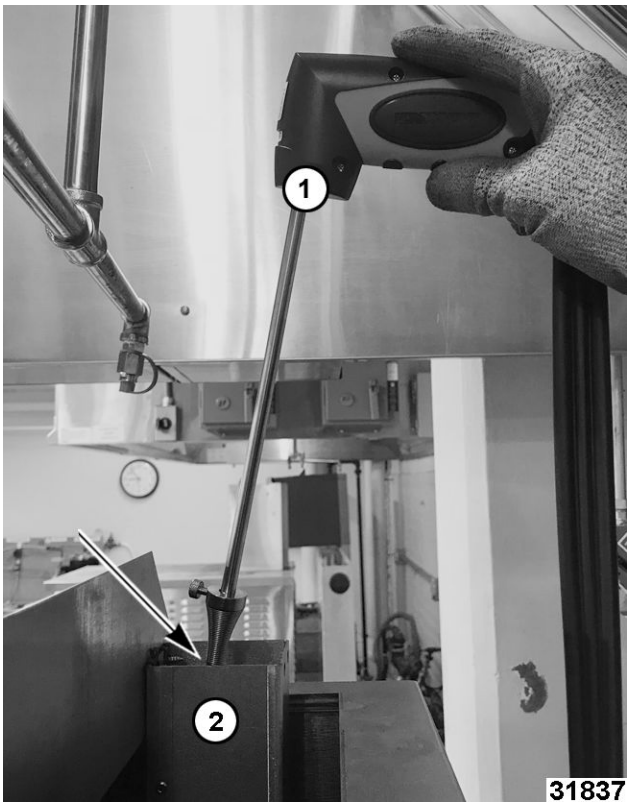


**Fig. 53**

D. Verify requirements.

| HSI Burner Combustion Requirements | | |
|---|---|---|
| **Measure** | **Natural Gas** | **Propane Gas** |
| Supply Pressure | 7.0" to 10.5" W.C. | 11.0" to 13.0" W.C. |
| **Basic Unit** C24GA6/10-21 - CO2 Percentage | 7 - 8.5% | 10.5 % (+/-0.5%) |
| **Power Steam** C24GA6/10-1 - CO2 Percentage | 8.5 - 9.5% | |
| CO (ppm, Air Free) | Less than 100 ppm | Less than 100 ppm |

2. Install mylar sheet with mounting nuts in bottom of control panel existing bolt holes over motor.

**NOTICE**

Mylar sheet must be installed to protect electrical connections.

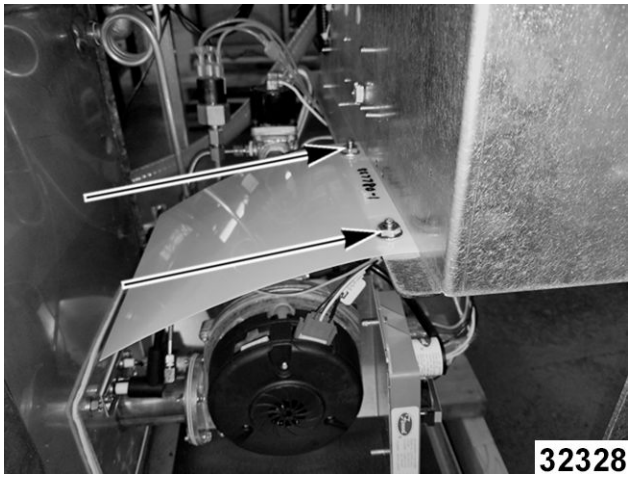


**Fig. 54**

3. Install side and front panels.
4. Verify operation.

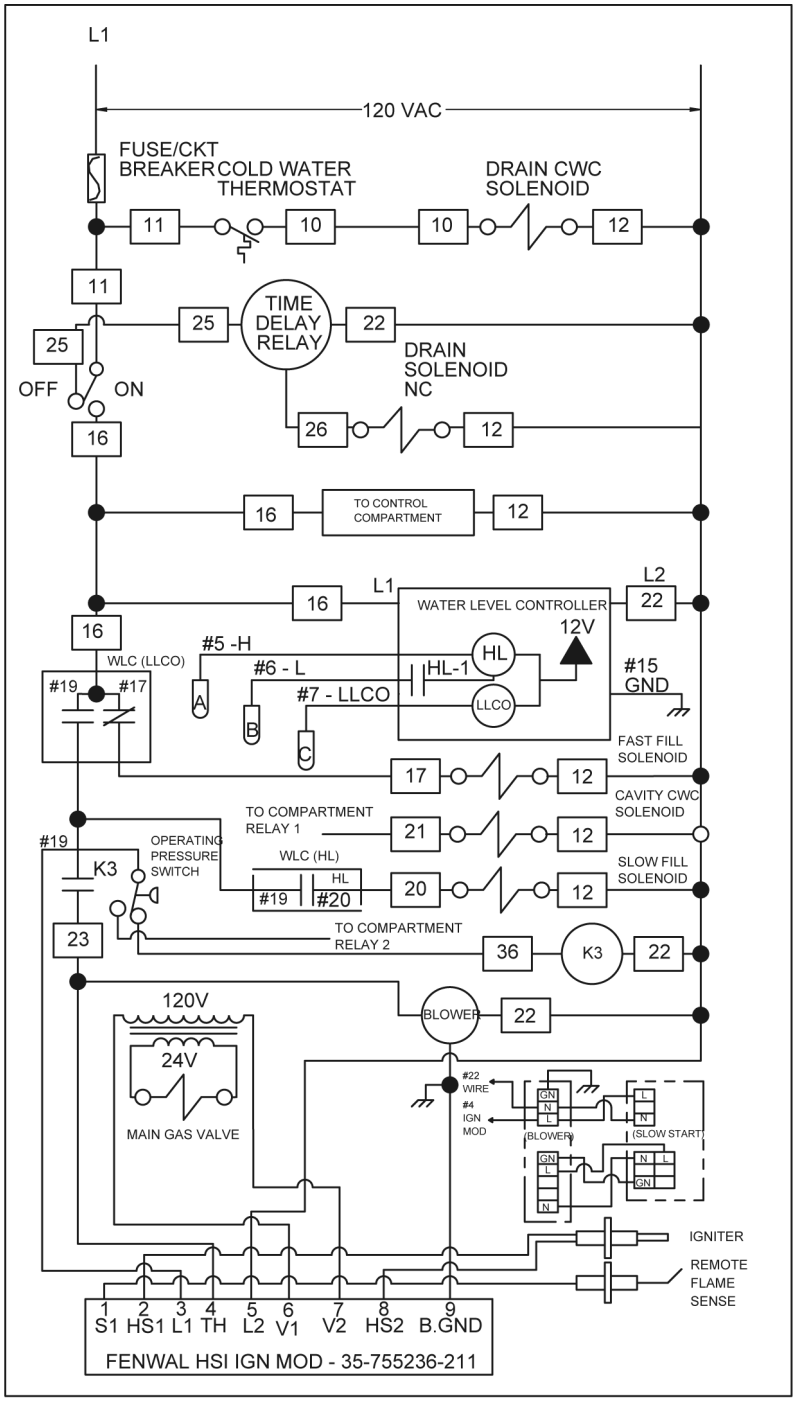


C24GA - WIRING DIAGRAM

DERIVED FROM 00-858840-1 REV B **AI5516**

**Fig. 55**

# AIR PRESSURE SWITCH ADJUSTMENT (ONLY UNITS WITH ADJUSTABLE PILOT)

**NOTICE**

Blower air pressure adjustment must be performed before proceeding with this procedure.

The air pressure switch senses the pressure level produced by the blower for combustion. When the pressure is sufficient, the switch closes and supplies power to the ignition control module. The gas ignition sequence starts to light the gas pilot and then main burner. If gas pilot is not lighting (valve not energized), the ignition control module may not be receiving power, assuming the minimum water level is satisfied. Check the air pressure switch operation then adjust if necessary as outlined in the procedure below.

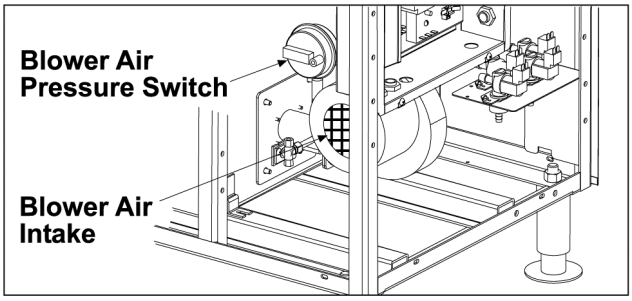


**Fig. 56**

1. Turn the power switch off.
2. Remove the front panel from the cabinet base.
   A. Inspect the air intake to the blower for debris build up and clogging.
      1) If debris is found, clean it away from the air intake.
   B. Turn the power switch on and verify main burner ignition.
      1) If burner ignites no adjustment to the pressure switch setting is necessary.
      2) If burner does not ignite, proceed to step 3.
3. Turn the main gas valve to off.
4. Adjust the air pressure switch setting as follows:
   A. Turn the adjustment screw fully clockwise to the highest setting.
   B. Slowly turn the adjustment screw counterclockwise until main gas valve energizes then add 1/2 turn to the adjustment. The screw head should not extend out past the screw housing.
      1) If gas valve energizes, proceed to step 5.
      2) If gas valve does not energize, check the following:
         a. Remove the lead wires from the switch and verify with a meter that the switch contacts are closing with the blower on. If necessary, continue to turn the adjustment screw several turns counterclockwise to close the switch contacts.
         b. If the switch contacts are not closing, turn the power switch off, remove the pressure switch from the manifold and check the air orifice for debris build up and clogging. If debris is found, clean it away from the orifice.
         c. Replace the orifice, pressure switch and connect the lead wires to the switch. Turn the power switch on and adjust the pressure switch again as outlined in steps 4A and 4B. Verify the pilot gas valve is energizing. d. If the pilot gas valve is not energizing and power is available to the pressure switch, turn the power switch off. Replace with a new air pressure switch and adjust the switch as outlined from step 3 thru the end of this procedure.
5. Restart the ignition sequence by turning the power switch off, waiting 3 seconds, then back on. .
   A. Listen or use a meter for gas pilot ignition to verify operation.
      1) If gas pilot ignition is successful, listen for main gas burner ignition to verify operation.
   B. Verify the pilot and main burner both ignite in succession.

1) Restart the ignition sequence by rapidly turning the power switch off then back on. A rapid switching is needed to keep the generator from starting automatic blowdown.

C. Listen for main gas burner ignition to verify operation

## PILOT BURNER ADJUSTMENT (ONLY UNITS WITH ADJUSTABLE PILOT)




**⚠ WARNING**

**Shut off the gas before servicing the unit and follow lockout / tagout procedures.**

**NOTE:** Only for units with adjustable pilot burner.

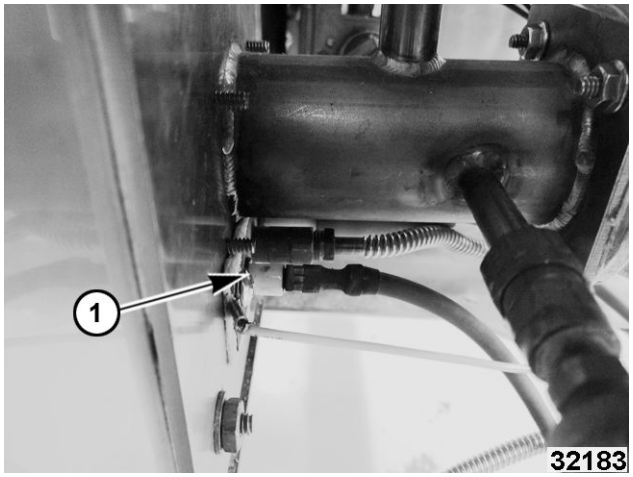


**ADJUSTABLE PILOT BURNER (1)**

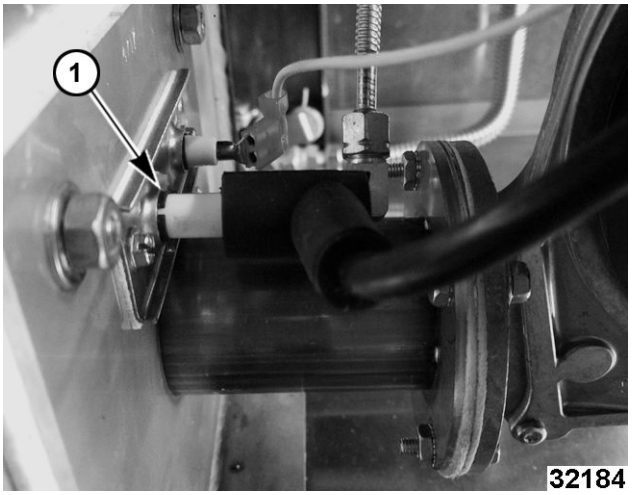


**SOLARONICS BURNER ASSEMBLY (1) NON-ADJUSTABLE PILOT**

1. Shut the gas off at combination gas valve.
2. Remove cover from manifold pressure tap.
3. Install a barb fitting and connect manometer.
4. Turn on the steamer, let generator fill.
5. Verify air pressure setting is between 0.35" and 0.4" W.C.
6. Verify air pressure switch adjustment.

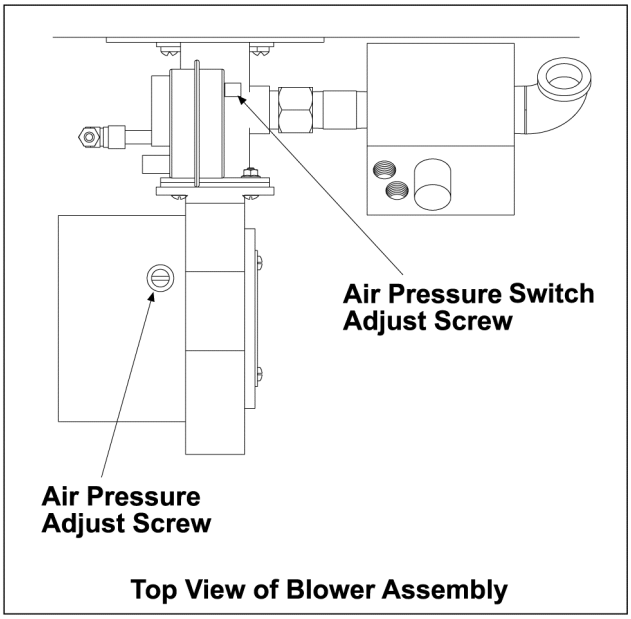


**Fig. 59**

7. Turn off the steamer.
8. Remove pilot assembly from burner.
9. Remove cap from pilot adjustment screw.
10. Using cabinet tip screwdriver turn pilot adjustment screw all the way in.
11. Back out pilot adjustment screw five (5) turns counter clockwise. This will get it close, may need tweaked.
12. Remove the wire from main valve (wire # 35).
13. Turn on the steamer, let generator fill.
14. Turn on combination gas valve.
15. Observe pilot flame; adjust pilot flame length using pilot adjustment screw. Set flame to approx. 2" long (Pilot flame should be a nice blue flame; with slight touch of yellow permissible at tip.)

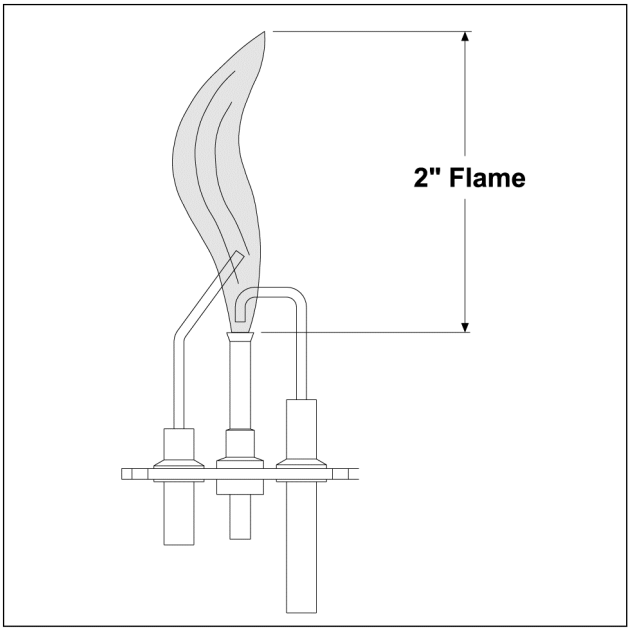


**Fig. 60**

16. Turn off the machine.
17. Re-install pilot, reconnect wire # 35.
18. Turn on the machine, let generator fill
19. Observe proper functioning of gas burner.

**Operating Pressure Switch**

1. Remove CABINET BASE FRONT PANEL. Pressure switch is located behind control box.

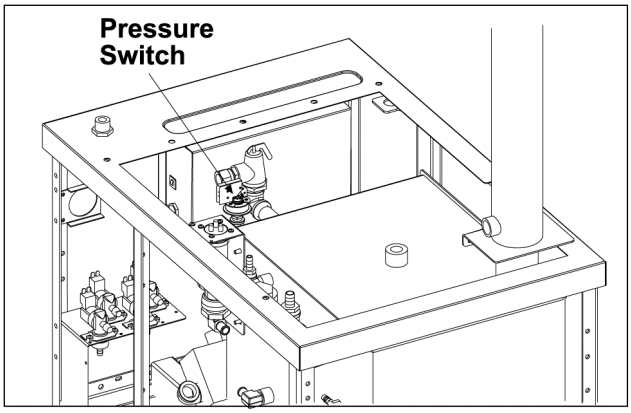


**Fig. 61**

2. Turn power on and let generator come up to pressure.
3. After ready light comes on, turn one of the cooking compartment timers to exhaust steam from the generator.

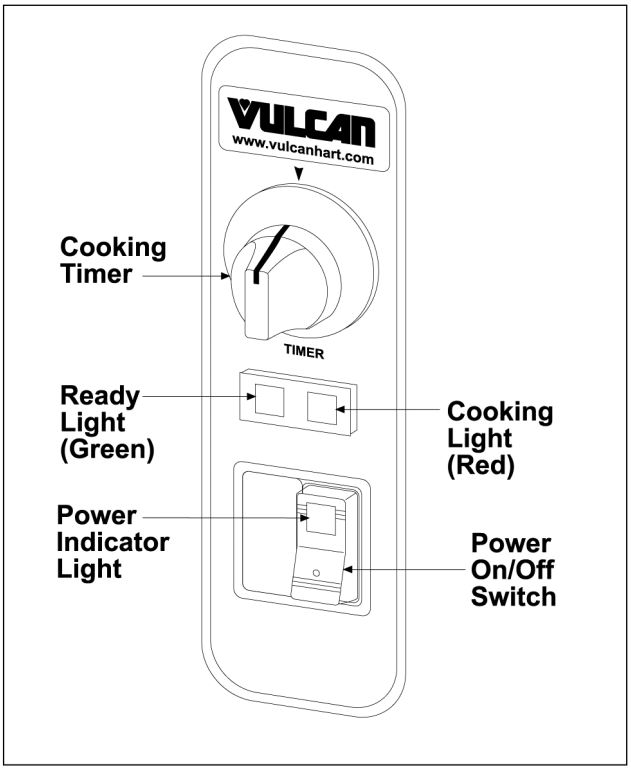


**Fig. 62**

4. Observe generator pressure gauge reading for several cycles and verify that the burner is cycling off at 3 psi.

   **CURRENT PRODUCTION SHOWN (1, Fig. 63)**

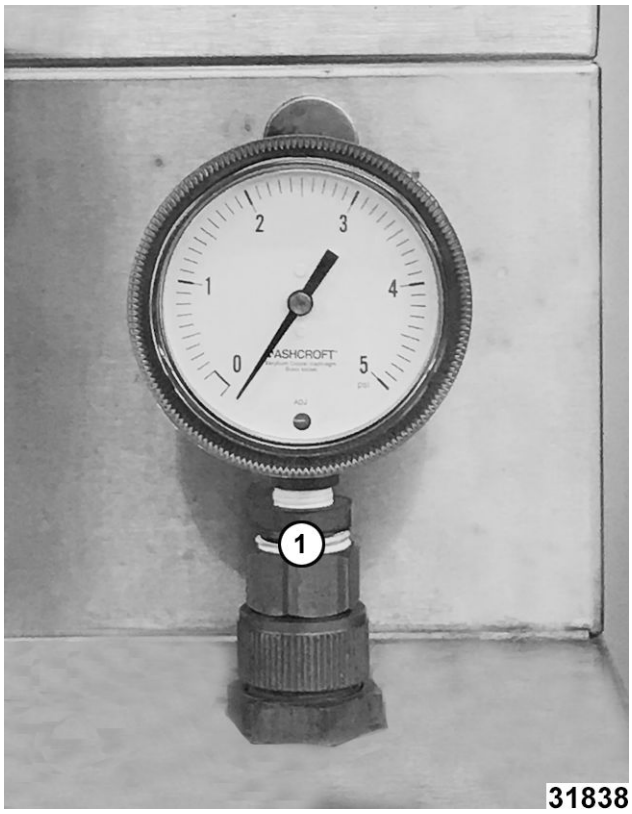


**Fig. 63**

**PREVIOUS PRODUCTION SHOWN (Fig. 64)**

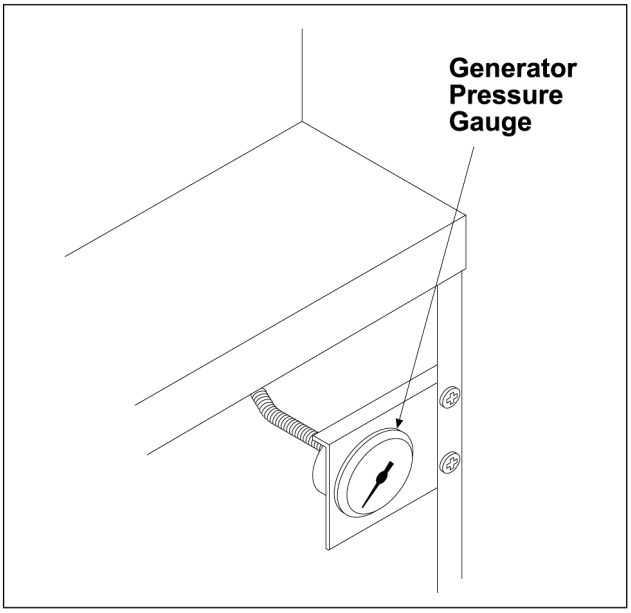


**Fig. 64**

**Thumb Wheel Adjustment**

The thumb wheel directly below the microswitch changes both the cut-out (off) and the cut-in (on) points of the operating Pressure Switch.

Turn the thumb wheel to obtain the proper cut-out (off) setting. Turning thumb wheel clockwise increases the pressure. The cut-out (off) off setting should be 3 psi.

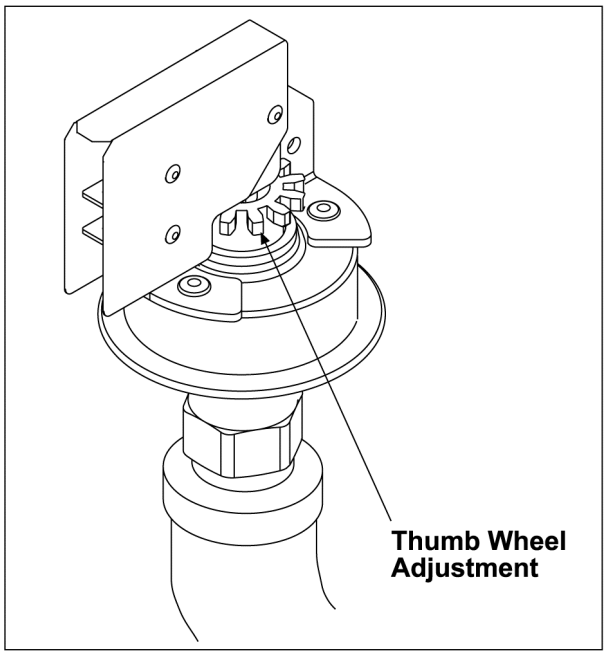


**Fig. 65**

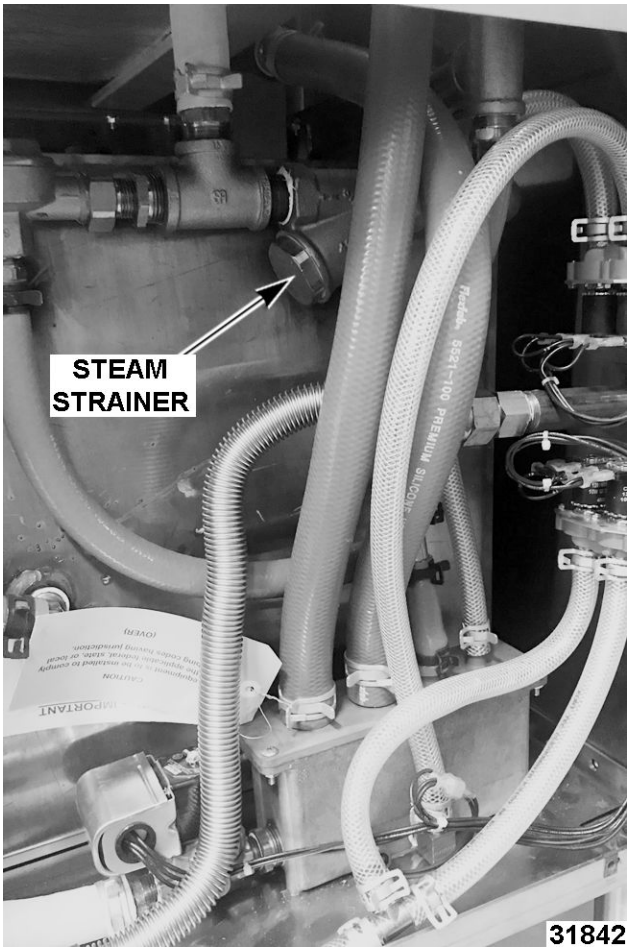


**Fig. 66**

**Inlet Water/Steam Strainer**

1. Unscrew the cap from the body.

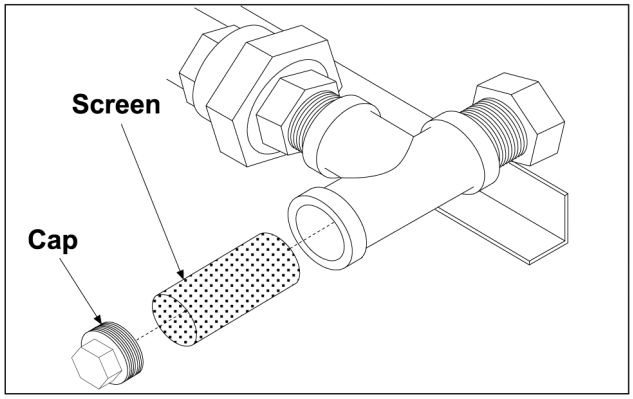


**Fig. 67**

2. Remove the screen and any foreign particles trapped in the opening.
3. Rinse the screen thoroughly to remove accumulated debris and replace the screen in the valve body. If the screen cannot be thoroughly cleaned, replace it with a new one.
4. Reinstall the cap.

## OPERATING PRESSURE SWITCH




**⚠ WARNING**

**Disconnect the electrical power to the machine and follow lockout / tagout procedures.**

1. Remove CABINET BASE FRONT PANEL. Pressure switch is located behind control box.

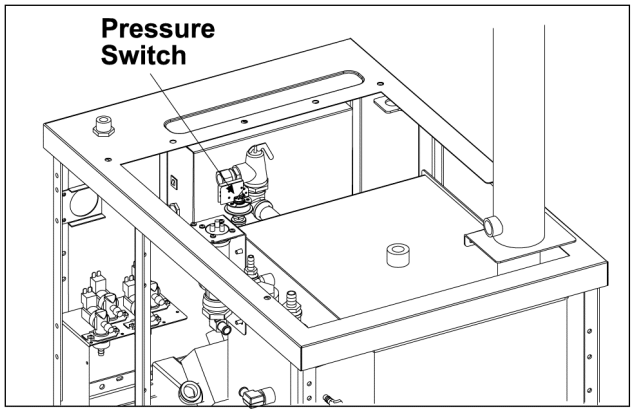


**Fig. 68**

2. Turn power on and let generator come up to pressure.
3. After ready light comes on, turn one of the cooking compartment timers to exhaust steam from the generator.

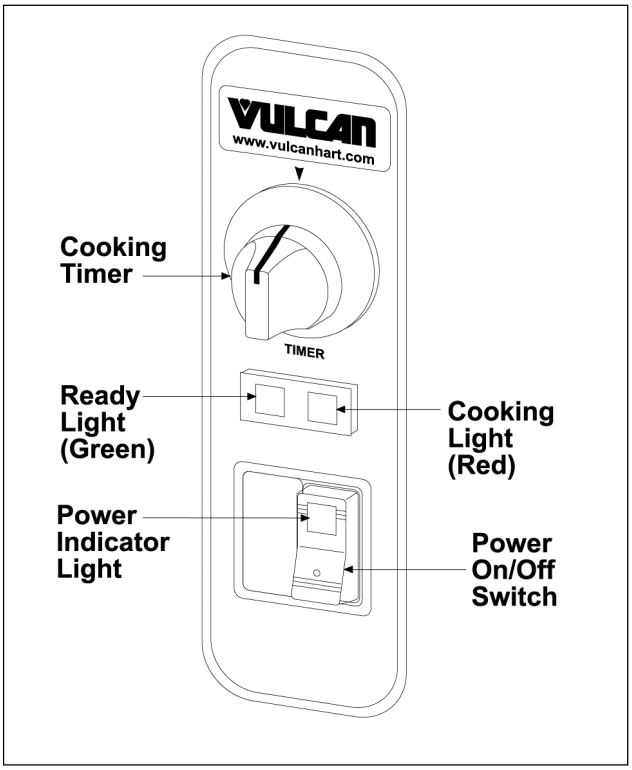


**Fig. 69**

4. Observe generator pressure gauge reading for several cycles and verify that the burner is cycling off at 3 psi.

**CURRENT PRODUCTION SHOWN (1, Fig. 70)**

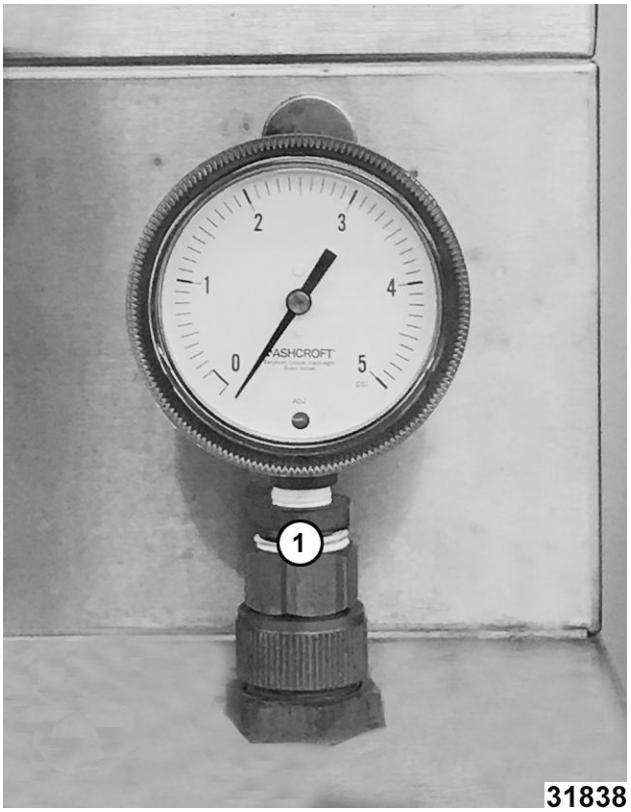


**Fig. 70**

**PREVIOUS PRODUCTION SHOWN (Fig. 71)**

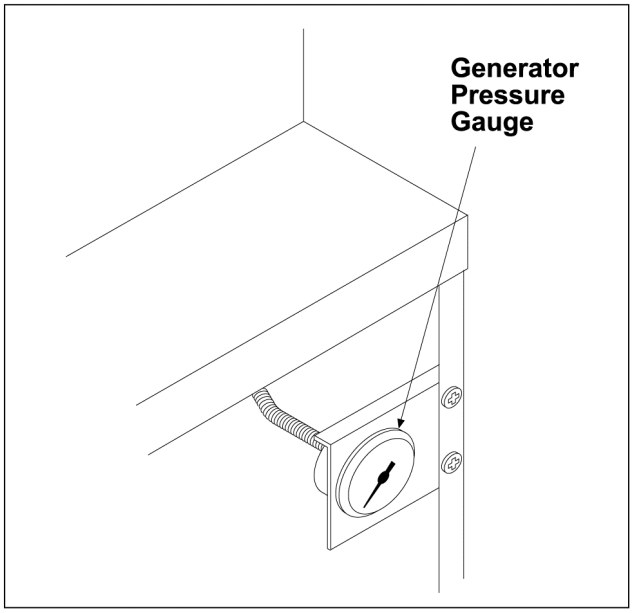


**Fig. 71**

## AUTOMATIC IGNITION SYSTEMS

**NOTE:** Only for units with adjustable pilot burner.

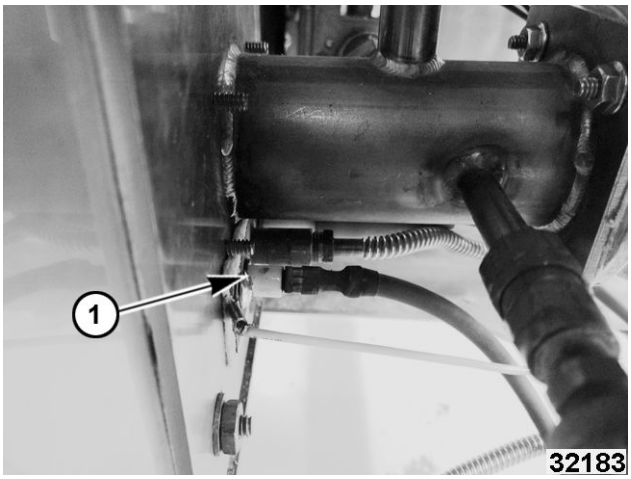


**ADJUSTABLE PILOT BURNER (1)**

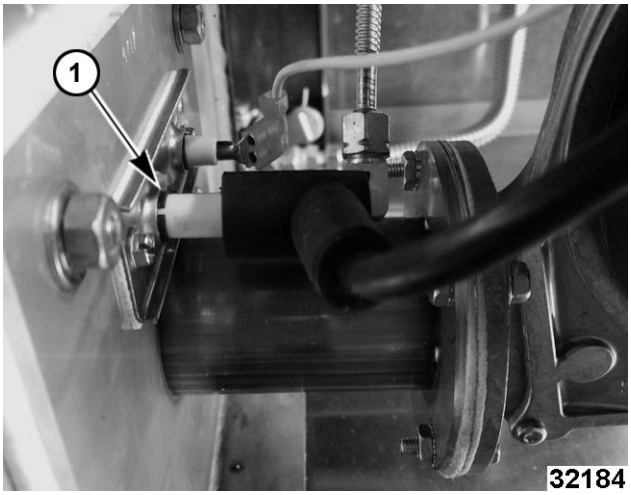


**SOLARONICS BURNER ASSEMBLY (1) NON-ADJUSTABLE PILOT**

When the main power switch is turned on and the water level is above LLCO, the ignition control module is energized with 24 volts between terminals five and six. High voltage is sent from terminal nine to the spark electrode and an output of 24 volts is sent from terminals two and three to the pilot coil in the combination valve, allowing gas to flow to the pilot. The sparking will continue for 90 seconds or until the flame sensor has confirmed that an adequate pilot flame is present.

Once the pilot flame is confirmed, a 24 volt output from terminal one will be sent to the gas combination control valve.

| TERMINAL NO. | DESCRIPTION |
|---|---|
| 1 | Voltage (24 VAC) will be present on MV terminal #1 with the pilot sensing electrode sensing an adequate pilot flame. This output will remain present as long as the pilot flame remains adequate. |
| 2 | Common MV/PV. |
| 3 | The Pilot Voltage (24 VAC) will be present on terminal #3 at the instant an input voltage is supplied to the module. This voltage will remain present on terminal #3 providing an adequate pilot flame is established within 90 seconds. In the event that an adequate pilot flame is not established within 90 seconds this output voltage will drop out. |
| 4 | Ground (burner). |
| 5 | Ground (24 VAC Neutral). |
| 6 | 24 VAC Input. |
| 8 | Flame Sensor. |
| 9 | Flame Sensor. |

**PREVIOUS PRODUCTION SHOWN**

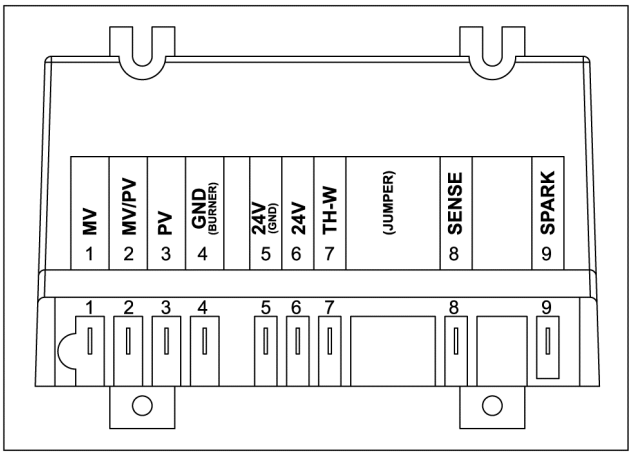


**Fig. 74**

**CURRENT PRODUCTION SHOWN SOLARONICS**

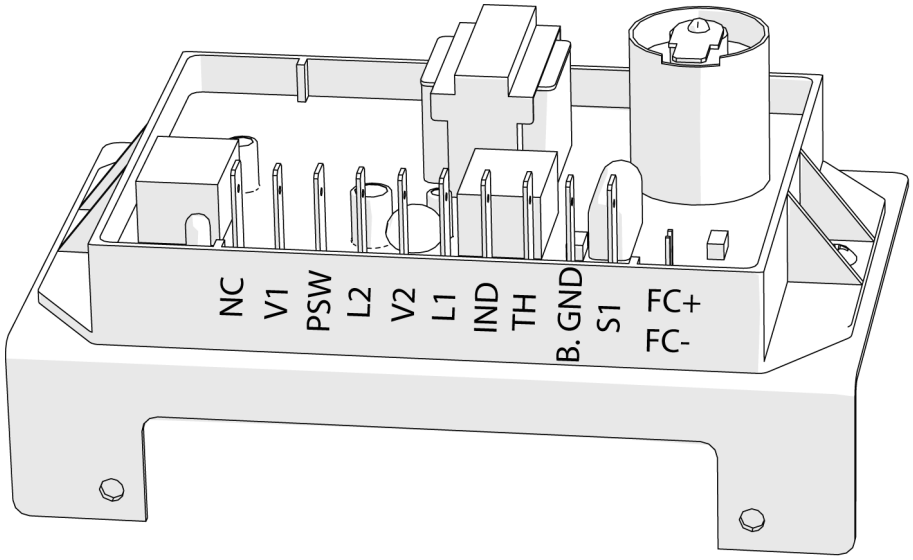


AI4916

**Fig. 75**

**Spark Ignition Control Test**

The ignition control module and ignition control module transformer are located in the electronics enclosure behind the generator base front cover.

**PREVIOUS PRODUCTION SHOWN IN Fig. 76**

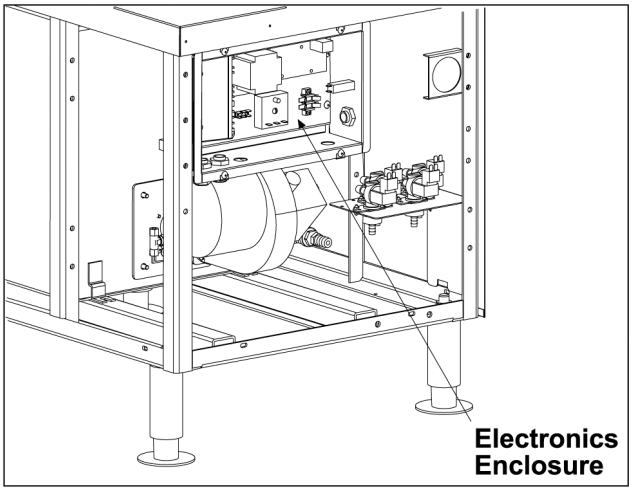


**Fig. 76**

1. Check for earth ground.

   **PREVIOUS PRODUCTION SHOWN IN** Fig. 77

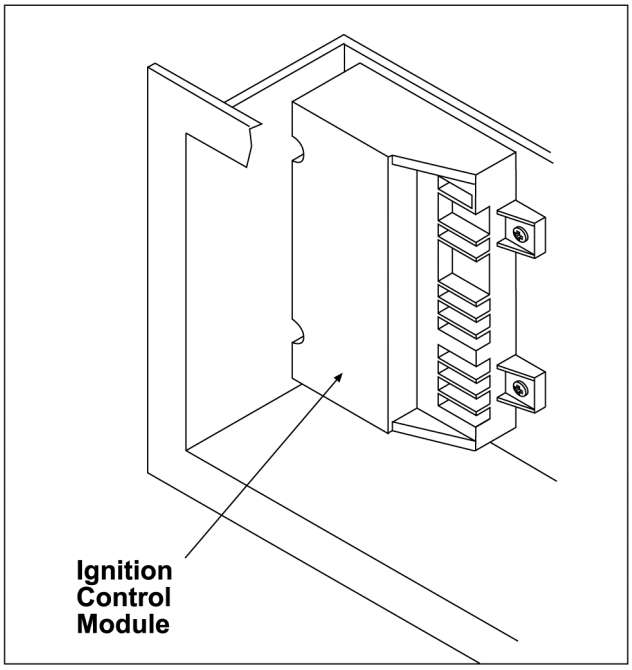


**Fig. 77**

2. Check to ensure that all electrical terminal connections on the ignition control module and the igniter are clean and tight.
3. Verify that the ignition control module and the igniter have good ground wire connections. The igniter mounting bracket should have good metal to metal contact to its mounting surface.
4. Turn the main power switch on. Make sure LLCO light is on.
5. Check for 24VAC output on the ignition control module transformer.

A. If 24VAC is present, then replace ignition control module and retest. It may take up to 3 seconds for the module to reset if main power is turned off then back on.

B. If 24VAC is not present, then ensure that transformer is receiving 120VAC input. If ignition control module transformer is receiving proper voltage, then replace ignition control module transformer and retest.

## IGNITION TEST

1. The gap between the spark probe and the pilot burner should be approximately 1/8". If the gap appears to be excessive or poor sparking is occurring, remove the electronic ignition pilot and adjust gap.

**PREVIOUS PRODUCTION SHOWN**

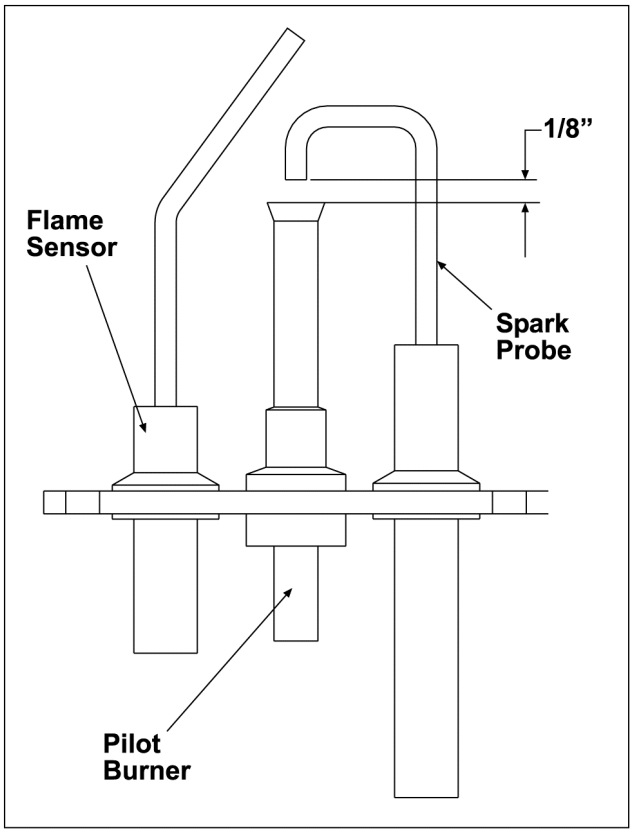


**Fig. 78**

**PREVIOUS PRODUCTION SHOWN**

2. Inspect the ceramic flame rod insulator for cracks or evidence of exposure to extreme heat, which can permit leakage to ground. If either of these conditions exist, then replace the pilot igniter assembly.

3. Check the ignition cable for tightness or damaged insulation.

4. 4. Check unit for proper operation.

Inspect the pilot burner orifice. This should be approximately 1/8" in diameter and free of debris.

## MANIFOLD PRESSURE ADJUSTMENT (ONLY UNITS WITH ADJUSTABLE PILOT)




**⚠ WARNING**

**Disconnect the electrical power to the machine and follow lockout / tagout procedures.**




**⚠ WARNING**

**Shut off the steam before servicing the unit and follow lockout / tagout procedures.**

**⚠ WARNING**

**All gas joints disturbed during servicing must be checked for leaks. Check with a soap and water solution (bubbles). Do not use an open flame.**

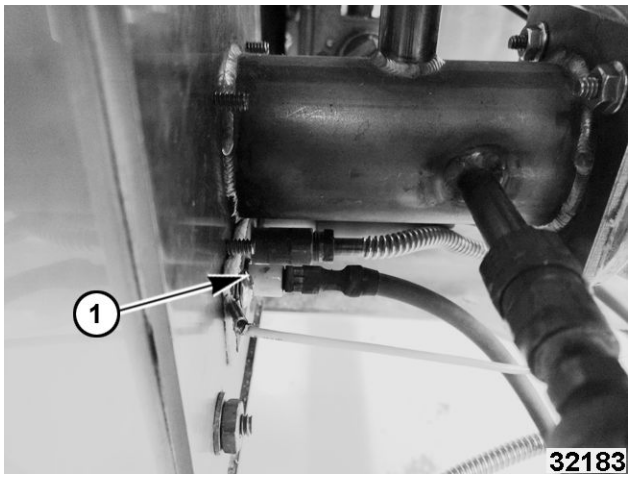


**ADJUSTABLE PILOT BURNER (1)**

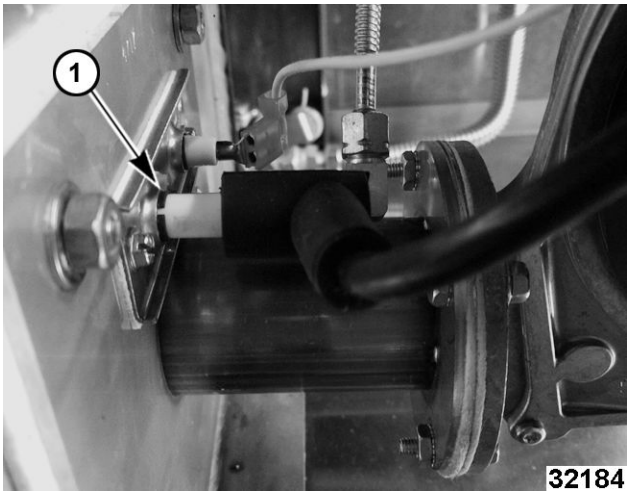


**SOLARONICS BURNER ASSEMBLY (1) NON-ADJUSTABLE PILOT**

A. CHECK ALL JOINTS PRIOR TO THE GAS VALVE (SOLENOID) BEFORE LIGHTING THE UNIT.

B. CHECK ALL JOINTS BEYOND GAS VALVE (SOLENOID) AFTER UNIT IS LIT.

1. Remove FRONT, RIGHT AND LEFT SIDE PANELS
2. Turn the gas combination control valve off.

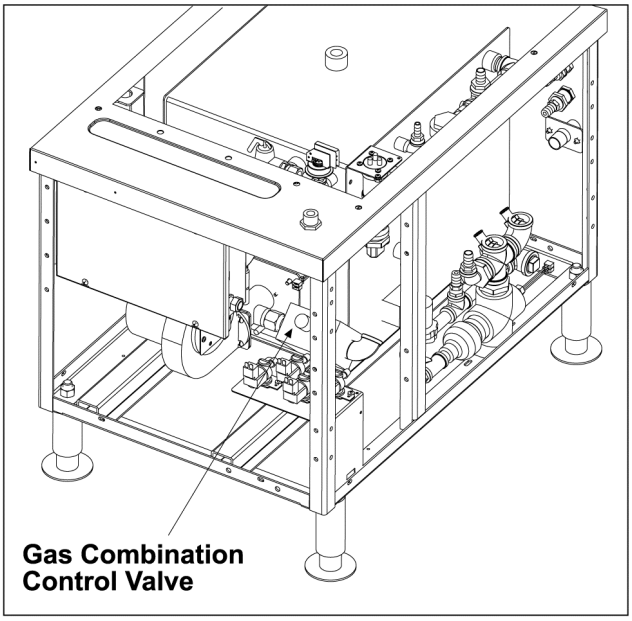


**Fig. 81**

3. To measure the manifold pressure, remove the 1/8" NPT plug (pressure tap) on the outlet side of the gas combination control valve and attach a manometer.
4. Turn the gas supply valve and the main power switch on. Allow generator to fill.
5. Verify burner air pressure is 0.35" to 0.4" W.C.
6. Turn the gas combination control valve on and wait until main burner lights.
7. Observe the manometer pressure reading and compare to the pressure chart below.

| GAS PRESSURE READINGS (INCHES W.C.) | | | | |
|---|---|---|---|---|
| | MANIFOLD | LINE* | | |
| GAS TYPE | | RECOMMENDED | MIN | MAX |
| Natrual | 2.5 | 7.0 | 5.0 | 14 |
| Propane | 10.0 | 11.0 | 11.0 | 14 |

*** If the incoming line pressure is less than the minimum stated, then the manifold pressure cannot be set correctly.**

8. Once the correct pressure has been set, turn the power switch and gas supply off, replace the adjustment screw cap and 1/8" NPT plug (pressure tap) on the outlet side of the valve.

## COOKING COMPARTMENT

**Controls**

1. For access to compartment controls, remove the right side panel from the cooking compartment as outlined under COVERS AND PANELS.
2. Check door switch for proper operation.

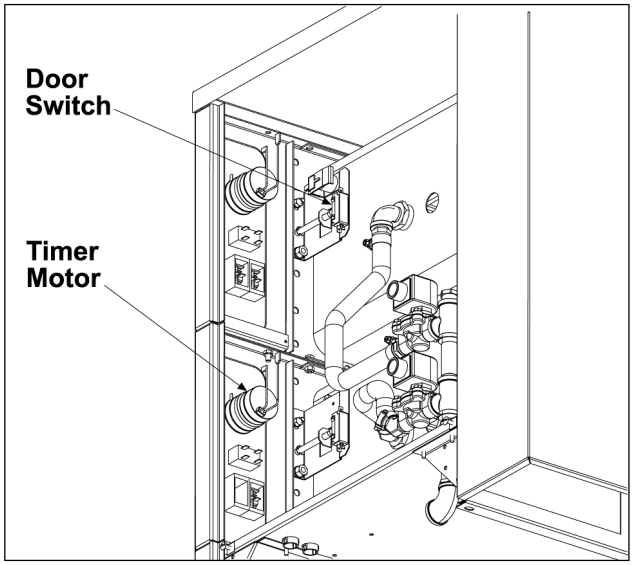


**Fig. 82**

3. Check cooking timer function and contact position. See SCHEMATICS under ELECTRICAL OPERATION.
4. Check that timer motor operates when connected to power. If a problem is found in timer, replace it, do not take timer apart.
5. Check wiring for damaged insulation (no short circuit).
6. Check that all connections and terminals are securely fastened (no open circuits).
7. Check that all connections are made according to compartment control wiring diagram.

## DOOR

**Latch Adjustment**

If the cabinet door jams and cannot be opened, do not force or pry the door, as damage will occur.

First, try lifting up on the bottom of the door at the handle end to disengage the latch. If that does not work, remove the right side panel from the cooking compartment as outlined under COVERS AND PANELS.

The striker that catches on the door latch is located behind the front face of the cooking cavity. Remove the nut from the striker to release it from the panel.

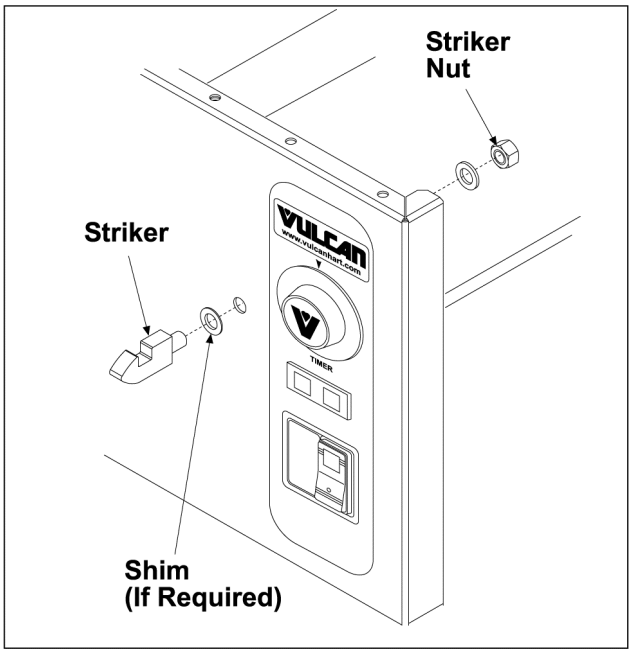


**Fig. 83**

Once the nut and washer have been removed, door will open freely.

Remove any burrs on the striker that may cause the latch to stick. Reinstall the striker and adjust so door will not jam.

**Striker Adjustment**

1. Reinstall the striker with the slot pointing upwards and hand tighten nut only.
2. Close the door to center the striker in the oval mounting hole.
3. Open the door and check the striker's slot for horizontal alignment. The slot on the striker must be kept horizontal in order for the door latch to catch it properly and latch.

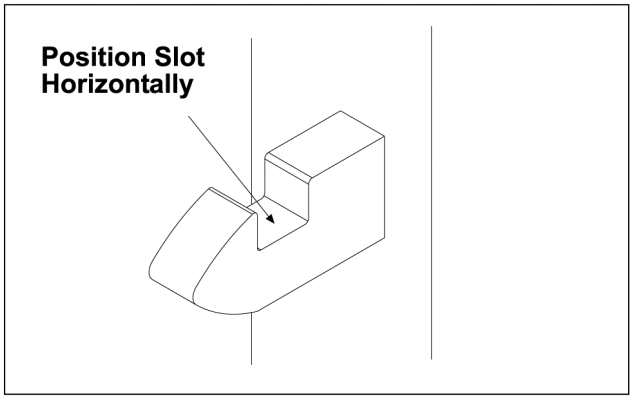


**Fig. 84**

4. Once the proper slot alignment has been set, hold the striker close to its base using an open end wrench, add Loctite to the threads, then tighten the striker nut. Be careful not to damage the striker slot when tightening or door may not latch properly. Do not over tighten as the striker will begin to turn and change alignment.
5. If door does not open easily, add shims as necessary between striker and cabinet front.
6. Repeat steps 2 thru 4.

## DELIME GENERATOR

**⚠ WARNING**

**READ AND FOLLOW THE INSTRUCTIONS ON THE DELIMING MATERIAL PACKAGE. AVOID CONTACT WITH SKIN AND EYES. WEAR PLASTIC OR RUBBER GLOVES AND SAFETY GOGGLES WHEN HANDLING. WASH THOROUGHLY AFTER HANDLING. IF DELIMING SOLUTION COMES IN CONTACT WITH THE SKIN OR EYES, RINSE THOROUGHLY WITH CLEAN WATER.**

**⚠ WARNING**

**THE STEAMER AND ITS PARTS ARE HOT. USE CARE WHEN OPERATING, CLEANING OR SERVICING THE STEAMER. THE COOKING COMPARTMENT CONTAINS LIVE STEAM. STAY CLEAR WHEN OPENING DOOR.**

□ Delime generator weekly. Refer to TOOLS for Scale Release information.

**NOTICE**

This procedure is not intended to take the place of a water treatment program. Use instructions supplied with Scale blocker PM kit when filter is being replaced.

**NOTE:** Scale blocker® water treatment system is used for preventative maintenance and must be performed according to water hardness. Refer to schedule chart below. 84 oz of Scale Release is required to delime generator when no water treatment is used other than carbon block. 28 oz (2 bags) is required for C24GA6 & 10.

| Hardness (Grains) | Deliming Schedule |
|---|---|
| 0 to 5 | 6 Months |
| 5 to 10 | 3 Months |
| 10 to 15 | Monthly |
| 15 to 20 | 2 Weeks |
| 20+ | Other Water Treatment Is Required |

**Delime Generator Procedure**

**Items Required (not provided)**

- Deliming material. Refer to TOOLS for scale release information.
- Funnel.
- Plastic or rubber gloves.
- Safety goggles or face shield.
- Measuring cup.
- 1 gallon container for mixing deliming solution.
- Petrol-Gel Lubricant or equivalent food grade grease for coating deliming port threads.

**NOTE:** Deliming solution may cause the surface of aluminum measuring tools to tarnish or etch.

**C24GA (Automatic Drain) 11 US GAL Capacity Steam Generator.**

1. Turn power switch off. Wait 15 minutes for steam generator to completely drain and the drain valve to close.
2. Turn cooking timers to off.
3. Prepare deliming solution according to the instructions on deliming material package. Follow all manufacturers' instructions.
4. Remove delime port cap on top of unit and insert funnel into delime port.

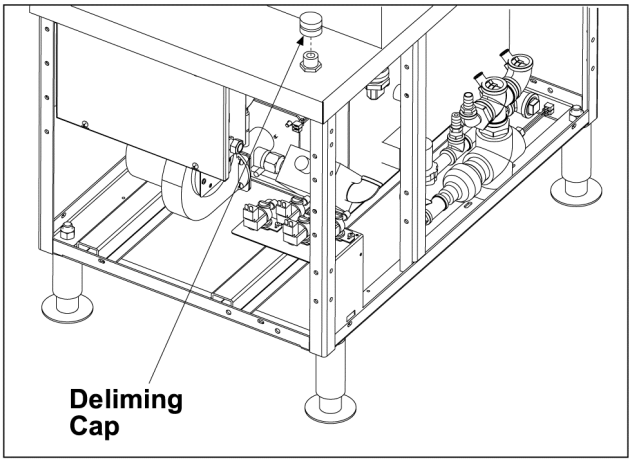


**Fig. 85**

5. Pour deliming solution into steam generator slowly to avoid spillage.
6. Remove funnel from delime port then rinse port with clean water.
7. Lightly coat delime port threads with Petrol-Gel then install delime port cap. Cap must be installed and tightened securely at all times.
8. Turn power switch on. When ready light comes on, allow steamer to remain on for 45 minutes.
9. After 45 minutes, turn cooking timers on for 5 minutes to delime the steam tubes and nozzles.
10. After 5 minutes, turn power switch off and allow steam generator to completely drain, 5 minutes.
11. Turn power switch on. When ready light comes on, turn cooking timers on for 30 seconds to rinse steam tubes and nozzles.
12. Turn power switch off and allow steam generator to completely drain.
13. Turn cooking timers to off.
14. Repeat steam generator rinse one time.
15. Clean exterior and interior using a mild solution of soap and water.

**NOTICE**

Do not use cleaners containing chlorides or chlorine.

16. Rinse with clean water then dry with a soft cloth.

**NOTICE**

Leave compartment doors open when not in use.

17. The steamer is ready for operation or shutdown.

## COOKING CYCLE TEST

**General**

During a cooking cycle, the gas heating system will cycle on and off as necessary to maintain steam pressure in the generator. When the steam pressure in the steam generator reaches 4 psi for the first time after machine is switched on, the steam header pressure relay latches on and supplies power to compartment controls. Ready light will illuminate (header pressure relay remains latched until the machine is switched off).

Test operation of the cooking compartment controls.

1. With both timer knobs at the off position, open the compartment doors.
2. Observe that no steam has entered the cooking compartments.
3. Close the doors.
4. Set both timer knobs at 2 minutes.
5. Confirm that the ready lights go off, the cooking lights come on, and steam begins to enter the compartments.
6. After one minute, open both doors.

7. Observe that steam has ceased to enter each compartment, cooking lights go back to ready, and one minute is remaining on each cook timer.
8. Close the doors.
9. Confirm that steam delivery and cook timing resume.
10. Observe the floor drain to ensure that live steam from the compartments is being cooled by cold water from the cold water condenser solenoid valve.
11. When the timer knobs reach 0, confirm that the buzzers sound, steam delivery ceases, cooking lights go off, and ready lights come on.
12. To silence the buzzers, turn the timer knobs to off position.
13. Turn the main power switch off to remove power from the steamer, and confirm that the red light goes out and generator drains.

## PROBE INSPECTION

It is recommended that the generator be thoroughly inspected for excessive scale and lime build-up on a quarterly basis. In hard water areas or for units heavily used, a shorter interval should be used. This inspection consists of the following:

| | |
|---|---|
| Drain Plug - | Remove clean-out port plug to check for scale. |
| Probe - | A check of lime build-up on the water level probe assembly. |
| Controls - | check of all generator controls, including the pressure switches. |

**PREVIOUS PRODUCTION MODELS**

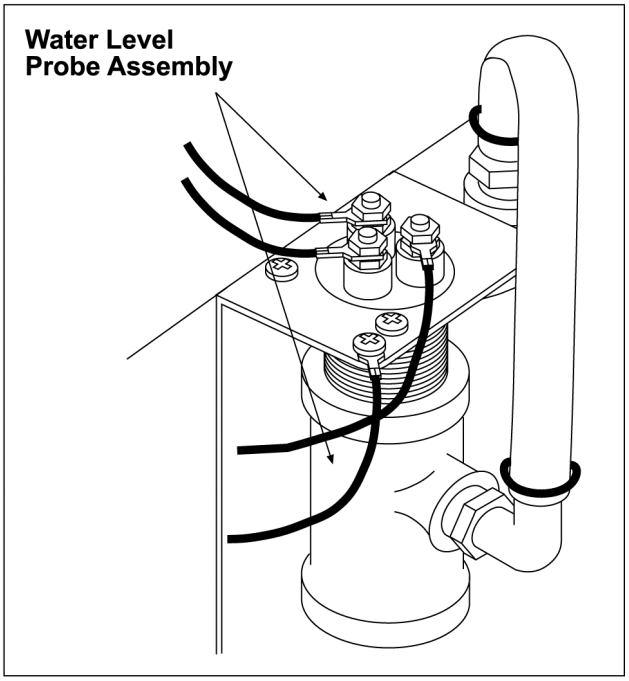


**Fig. 86**

**CURRENT PRODUCTION MODELS**

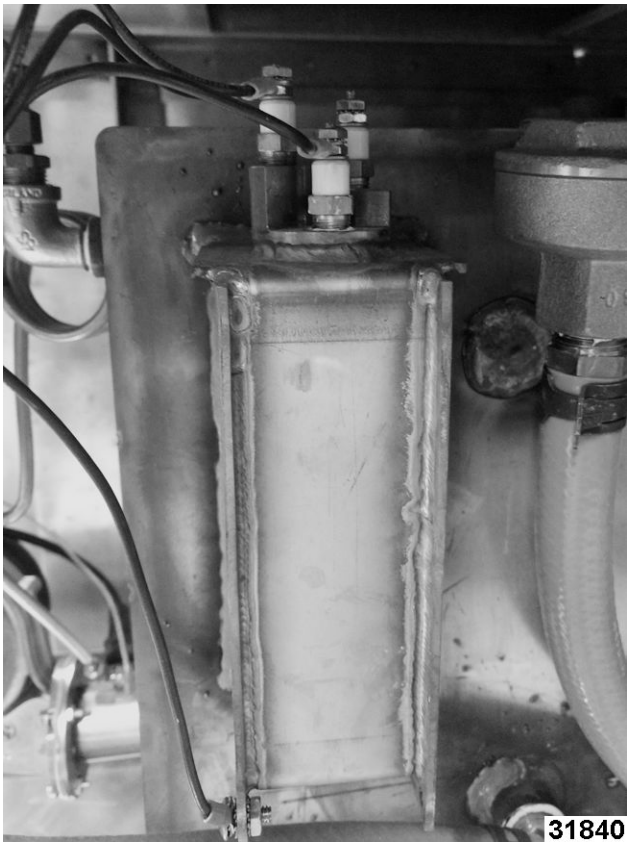


**Fig. 87**

## MAINTENANCE CHECKS

**Periodic Maintenance**

□ DELIME GENERATOR

□ Change carbon block filter every 6 months or per filter manufacture's recommendation.

□ Weekly inspect door seals for cuts, tears, or leaks. Replace as needed.

□ Weekly check filter system pressure, 20 PSI minimum while filling, and change cartridge(s) if less or if they are due for replacement.

**Yearly Maintenance**




**⚠ WARNING**

**Disconnect the electrical power to the machine and follow lockout / tagout procedures.**

1. Verify power is removed and locked.
2. Turn off water supply to steamer.
3. Verify hoods system is operating per manufactures specification and is clean and free of obstructions and grease build up.
4. Inspect water level probes.

**NOTE:** Current production probe housing is welded to generator tank.

A. Remove RIGHT SIDE COVER .

B. Remove and inspect water level probes.

C. Clean water level probes if lime scale is present.

**NOTICE**

If probes show signs of corrosion or excessive lime scale build up, replace probes and have water tested.

D. Apply pipe sealant or teflon tape to threads on probe.

E. Install water level probes.

5. Inspect steam and drain strainers.

**NOTE:** Current production generatorsonly have "Y" type strainers located in middle of steam manifold.

**Earlier Production Models**

A. Remove pipe plugs located on right side of steam generator.

B. Remove steam and drain strainers.

C. Clean strainers.

D. Install strainers.

E. Apply pipe sealant or teflon tape on plug threads.

**Current Production Models**

A. Remove FLUE WRAP.

B. remove the "Y" strainer screen with a 5/8"socket or wrench.

C. Clean the screen.

D. Install screen and flue wrap.

6. Inspect screens.

A. Remove the two water supply hoses and inspect screens in the valve openings. If dirty remove the screen by prying it out with a small screw driver. Clean the screen and reinsert into the valve opening. Reinstall the water supply hoses making sure the filtered/ treated water hose is connected to the valve marked treated or filtered water. Improperly reconnecting the hoses will result in excessive scale build up and corrosion.

# ELECTRICAL OPERATION

## WATER LEVEL CONTROLS

**Low Level Cut-Off and Differential Control**
The steamer is equipped with three water level sensing probes (high, low and low level cut-off) and a single water level control board. The water level control board performs two functions:

- Provide low level cut-off protection to shut off the heat source in case the water level drops below the low level cut-off (LLCO) probe.
- Perform as a differential level control to maintain the water level between the low and high water level probes.

The water level control (WLC) has 120VAC across terminals L1 and L2 which powers the primary side of the transformer. On one side of the transformer secondary, power is provided to the control by a series path through chassis ground (GND). The other side of the transformer secondary, 12VAC is attached to the probe that directs power to the other side of WLC relay coils (LLCO and HL) and to the inverse latching relay (ILR) electronic circuit of WLC. As water enters the steam generator, it becomes part of the WLC circuit. When the water level in steam generator reaches a probe, that circuit is completed. The inverse latching relay contacts of WLC are in their shelf state (ILR-1 NO and ILR-2 NC) until WLC is powered.

When the main power switch is turned on, power is supplied to the WLC. The high level (HL) relay is energized, HL LED illuminates and HL-1 normally open contacts close. The fast fill solenoid is energized through LLCO-2 normally closed contacts and steam generator begins fast fill. Power is not transferred to the slow fill solenoid until the water level reaches the LLCO probe and the LLCO relay is energized.

When the water level reaches the low level cut-off (LLCO) probe, LLCO relay is energized and LLCO LED is lit. The LLCO-2 contacts open, de-energizing the fast fill solenoid, and the LLCO-1 normally open contacts close. With LLCO-1 contacts closed, power is provided to the heating steamer control circuit to begin steam generation. With HL-1 contacts closed, the slow fill solenoid is energized and steam generator continues to fill at a slower rate.

LLCO relay will remain energized and its LED will stay lit until the water level in steam generator drops below LLCO probe or main power switch is turned off.

Water level reaches high level (HL) probe, the inverse latching relay on WLC is energized and locked through the low level probe (LL) and ILR-1 contacts. With ILR-2 contacts open, HL relay is de-energized and HL LED turns off. With HL-1 contacts open, the slow fill solenoid is de-energized, stopping the flow of water to the steam generator.

As steam is produced during a cooking cycle, the water level in the generator recedes. When the water level drops below the low level (LL) probe, power is removed from the inverse latching relay, HL relay energizes through ILR-2 and HL contacts change state. The slow fill solenoid is energized again through HL-1 to refill the steam generator and HL LED is lit. The HL relay and LED will toggle on and off during a cooking cycle as needed.

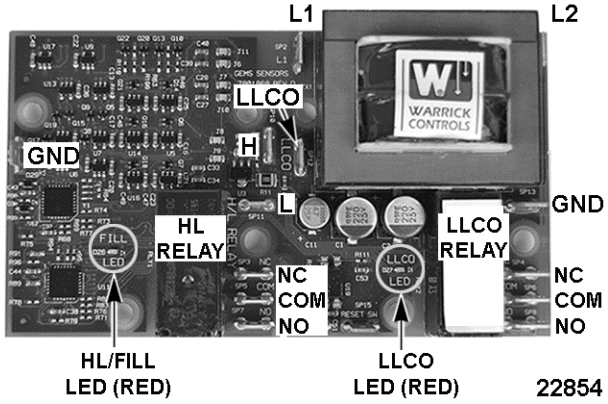


**Fig. 88**

## SEQUENCE OF OPERATION

Refer to schematic diagrams AI2947 and 22851 to explain the steamer electrical sequence of operation.

**Initial Fill and Preheat**

1. Conditions:
   - A. Steamer connected to:
     1) 120VAC and is properly grounded.
     2) Cold water supply with correct water requirements and valve is on.
     3) Steamer Connected to proper gas supply with correct supply pressures and valve is on.
   - B. Power switch off.
   - C. Cold water thermostat open (drain water temperature below 140°F for drain cooling).
     1) Drain cold water condenser (CWC) solenoid N.C. is de-energized.

D. Timer delay output off.

1) Drain solenoid valve N.C. is de-energized.

E. Main gas valve knob in on position.

F. Operating pressure switch (N.C.) is closed.

G. Air pressure switch (N.O.) is open.

H. Steam generator empty.

I. Compartment times off and doors are open.

2. Turn power switch on.

A. Time delay relay de-energized.

B. Power light (amber) on control panel is on.

C. 120VAC to - Terminal 5 on cavity relay K2 (N.O. contacts 5/3 provide power to compartment controls) and water level control (WLC) terminal L1.

D. 120VAC applied to compartment controls after cavity relay K1 is energized (generator at operating pressure).

3. With water level control (WLC) energized. Refer to WATER LEVEL CONTROL for complete operation details.

A. HL led lit. WLC HL (high level) relay energized.

1) WLC HL N.O. contacts close.

B. Fast fill solenoid energized through WLC LLCO relay N.C. contacts. Steam generator begins fast fill.

4. Water level reaches Low Level Cut-Off (LLCO) probe.

A. LLCO LED lit. WLC LLCO relay energized.

1) LLCO N.C. contacts open. Fast fill solenoid de-energized.

2) WLC LLCO N.O. contacts close. Slow fill solenoid energized through WLC HL closed contacts. Steam generator changes to slow fill.

a. Operating pressure switch N.C contacts engerizes K3 relay for blower.

b. K3 relay N.O. contact closes and blower is powered.

c. Air pressure switch N.O. contacts close providing 120 volts to transformer.

5. 24VAC out from transformer secondary.

6. Trial for ignition starts.

A. Ignition module generates spark at ignitor/ direct spark.

1) Sparking will continue until an adequate pilot flame is sensed maximum 10 seconds. If pilot flame is not established within the 10 second ignition trial time, the output to spark electrode is shut off (sparking stops) and the output to enrichment and main valves is locked out.

B. Sparking stops the main burner lights and flame sense has been proven.

1) Steam generator begins heating.

7. Water level reaches Low Level (L) probe.

A. Power to terminal L on WLC (no switching action) (input to board level control circuit present). WLC internal latching relay ILR-1 contacts are open.

8. Water level reaches High Level (HL) probe (board level control circuit energized and locked).

A. HL led off. WLC HL (high level) relay de-energized.

1) HL N.O. contacts open. Slow fill solenoid de-energized (generator filling stops).

9. Steam generator pressure reaches 3 psi.

A. Ready light on (green) (compartment controls).

1) N.C. contacts open. Power removed from:

a. Burner system.

b. Burner system de-energized (heating stops).

2) N.O. contacts close. Cavity relay K2 energized.

a. Relay N.O. contacts 5/3 close and latch - 120VAC to compartment controls. Relay remains energized until power switch is turned off.

b. Ready light (green) is on.

B. Operating pressure switch contacts change state.

10. Steamer is ready for operation. Refer to COMPARTMENT CONTROLS.

**Water Re-fill (After Initial Fill)**

1. The water refill cycle will occur whenever the water level is below the low level probe and will not affect the operation of either the preheat or cook cycle.
2. Water level drops below low level (L) probe.
    A. HL LED lit. High level coil (HL) energized by ILR-2 contacts returning to N.C. condition.
        1) Internal latching relay coil (ILR) on WLC de-energized. ILR-1 contacts return to N.O. condition.
        2) WLC (HL) contacts close. Slow fill solenoid energized.
    B. Water level reaches Low Level (L) probe (input to board level control circuit present).
        1) Power to terminal L on WLC (no switching action).
    C. Water level reaches high level (H) probe (board level control circuit energized and locked).
        1) Internal latching relay coil (ILR) on WLC energized and locked thru the low level probe (L) and ILR-1 closed contacts. HL LED off. WLC HL coil de-energized by ILR-2 contacts opening.
            a. WLC (HL) contacts open. Slow fill solenoid (4SOL) de-energized (generator filling stops.
3. Refill cycle repeats until: Timer turned OFF (generator idle); Or power switch turned off.
    A. if power switch is turned off
        1) power is removed from generator control circuit and compartment controls.

**Turning Steamer Off**

1. Power switch turned off (power removed from generator control circuit and compartment controls).
    A. Time delay relay energized and output activated for 1000 seconds / 16.7 minutes.
        1) Drain solenoid valve energized. Valve opens and steam generator begins draining.
2. Drain water temperature above 130°F. Cold water thermostat contacts close (N.O. contacts - close on temperature rise).
    A. Drain CWC solenoid energized. Drain water cooled.
3. Steam generator pressure drops below 3 PSI and operating pressure switch contacts return to closed position.
4. Time expires on time delay relay. Drain solenoid valve de-energized (generator empty).
5. Drain water temperature below 120°F. Cold water thermostat contacts return to open condition.

**Compartment Controls**

**NOTE:** Refer to schematic diagrams AI2947 and 22851 cooking compartment operation. The diagram shows the upper and lower compartment controls.The Controls are identical, but function independently when cooking timers are set during a cook cycle.

1. Power switch is on and steam generator pressurized.
    A. Operating pressure switch closed.
        1) Cavity relay K2 energized and N.O. relay contacts 5/3 close. 120VAC provided to cooking compartment control circuit.
2. 2. Door switch contacts closed (compartment door closed).
    A. Ready light (green) is on.
    B. Power to terminals 11 and 21 on timer
3. 3. Timer set for timed cooking.
    A. A. Timer contacts 11/13 and 21/23 close.
        1) Timer motor energized through contacts 11/13.
        2) Steam solenoid and cavity relay K1 energized through contacts 21/23.
            a. Cook light (red) is on.
        3) Cavity relay K1 N.O. contacts 3/5 close. Cavity cold water condenser (CWC) solenoid is energized to cool cavity drain condensate.
            a. If the upper and lower compartment timers are both set, cavity CWC solenoid is energized through relay 1 contacts 3/5. If lower compartment timer is the only timer set, cavity CWC solenoid is energized through relay 1 N.C. 1/5 contacts.
4. A. Timer contacts 11/13 and 21/23 open.
    A. Timer contacts 11/13 and 21/23 open.
        1) Timer motor de-energized.

2) Steam solenoid and cavity relay 1 de-energized (contacts 3/5 open).

a. Cook light (red) is off.

B. Timer contacts 11/14 close and energize buzzer (upper or lower cooking compartment timer).

1) Buzzer remains energized until: Timer turned to OFF; New time or CONSTANT steam selected; Or power switch turned off.

## ADJUSTABLE PILOT BURNER

Refer to schematic diagrams AI2947 and 22851 to explain the steamer electrical sequence of operation.

**Initial Fill and Preheat**

1. Conditions:
   A. Steamer connected to:
      1) 120VAC and is properly grounded.
      2) Cold water supply with correct water requirements and valve is on.
      3) Steamer Connected to proper gas supply with correct supply pressures and valve is on.
   B. Power switch off.
   C. Cold water thermostat open (drain water temperature below 140°F for drain cooling).
      1) Drain cold water condenser (CWC) solenoid N.C. is de-energized.
   D. Timer delay output off.
      1) Drain solenoid valve N.C. is de-energized.
   E. Main gas valve switch in on position.
   F. Operating pressure switch (N.C.) is closed.
   G. Steam generator empty.
   H. Compartment timers off and doors are open.
2. Turn power switch on.
   A. Time delay relay de-energized.
   B. Power light (amber) on control panel is on.
   C. 120VAC to - Terminal 5 on cavity relay K2 (N.O. contacts 5/3 provide power to compartment controls) and water level control (WLC) terminal L1.
   D. 120VAC applied to compartment controls after cavity relay K1 is energized (generator at operating pressure).
3. With water level control (WLC) energized. Refer to WATER LEVEL CONTROL for complete operation details.
   A. HL led lit. WLC HL (high level) relay energized.
      1) WLC HL N.O. contacts close.
   B. Fast fill solenoid energized through WLC LLCO relay N.C. contacts. Steam generator begins fast fill.
4. Water level reaches Low Level Cut-Off (LLCO) probe.
   A. LLCO LED lit. WLC LLCO relay energized.
      1) LLCO N.C. contacts open. Fast fill solenoid de-energized.
      2) WLC LLCO N.O. contacts close. 120 volts energizes ignition module. Slow fill solenoid energized through WLC HL closed contacts. Steam generator changes to slow fill.
         a. Operating pressure switch N.C contacts engerizes K3 relay for blower.
         b. K3 relay N.O. contact closes and provides power to the TH terminal of ignition module. Ignition module sends 120 volts to blower and transformer.
5. 120VAC to transformer primary.
   A. 24VAC out from transformer secondary to power igniter and main gas valve.
6. Trial for ignition starts.
   A. Ignition module generates spark at ignitor/ flame sense.
      1) Sparking will continue until an adequate pilot flame is sensed (pilot lit) or for a maximum of 90 seconds. If pilot flame is not established within the 90 second ignition trial time, the output to spark electrode is shut off (sparking stops) and the 120 volt to transformer. 24VAC from secondary of transformer to igniter and main gas valve is removed.After approximately 5 minutes, the trial for ignition sequence automatically starts again.

B. Igniter and main gas valve energized, valve opens to supply gas to burner.

1) Pilot burner lights. One micro amp or higher flame sense current travels back through flame sense wire to ignition module through ignition cable.

2) Burner lights and steam generator begins heating.

7. Water level reaches Low Level (L) probe.

A. Power to terminal L on WLC (no switching action) (input to board level control circuit present). WLC internal latching relay ILR-1 contacts are open.

8. Water level reaches High Level (HL) probe (board level control circuit energized and locked).

A. HL led off. WLC HL (high level) relay de-energized.

1) HL N.O. contacts open. Slow fill solenoid de-energized (generator filling stops).

9. Steam generator pressure reaches 3 psi.

A. Ready light on (green) (compartment controls).

1) N.C. contacts open. Power removed from:

a. K3 relay is de-energized removing voltage from TH terminal of ignition module.

b. Transformer, blower motor and gas valves de-energized (heating stops).

2) N.O. contacts close. Cavity relay K2 energized.

a. Relay N.O. contacts 5/3 close and latch - 120VAC to compartment controls. Relay remains energized until power switch is turned off.

b. Ready light (green) is on.

B. Operating pressure switch contacts change state.

10. Steamer is ready for operation. Refer to COMPARTMENT CONTROLS.

**Water Re-fill (After Initial Fill)**

1. The water refill cycle will occur whenever the water level is below the low level probe and will not affect the operation of either the preheat or cook cycle.

2. Water level drops below low level (L) probe.

A. HL LED lit. High level coil (HL) energized by ILR-2 contacts returning to N.C. condition.

1) Internal latching relay coil (ILR) on WLC de-energized. ILR-1 contacts return to N.O. condition.

2) WLC (HL) contacts close. Slow fill solenoid energized.

B. Water level reaches Low Level (L) probe (input to board level control circuit present).

1) Power to terminal L on WLC (no switching action).

C. Water level reaches high level (H) probe (board level control circuit energized and locked).

1) Internal latching relay coil (ILR) on WLC energized and locked thru the low level probe (L) and ILR-1 closed contacts. HL LED off. WLC HL coil de-energized by ILR-2 contacts opening.

a. WLC (HL) contacts open. Slow fill solenoid (4SOL) de-energized (generator filling stops.

3. Refill cycle repeats until: Timer turned OFF (generator idle); Or power switch turned off.

A. If power switch is turned off.

1) Power is removed from generator control circuit and compartment controls.

**Turning Steamer Off**

1. Power switch turned off (power removed from generator control circuit and compartment controls).

A. Time delay relay energized and output activated for 1000 seconds / 16.7 minutes.

1) Drain solenoid valve energized. Valve opens and steam generator begins draining.

2. Drain water temperature above 130°F. Cold water thermostat contacts close (N.O. contacts - close on temperature rise).

A. Drain CWC solenoid energized. Drain water cooled.

3. Steam generator pressure drops below 3 PSI and operating pressure switch contacts return to closed position.
4. Time expires on time delay relay. Drain solenoid valve de-energized (generator empty).
5. Drain water temperature below 130°F. Cold water thermostat contacts return to open condition.

**Compartment Controls**

**NOTE:** Refer to schematic diagrams AI2947 and 22851 cooking compartment operation. The diagram shows the upper and lower compartment controls.The Controls are identical, but function independently when cooking timers are set during a cook cycle.

1. Power switch is on and steam generator pressurized.
   A. Operating pressure switch (N.O. contacts) closed.
      1) Cavity relay K2 energized and N.O. relay contacts 5/3 close. 120VAC provided to cooking compartment control circuit.
2. 2. Door switch contacts closed (compartment door closed).
   A. Ready light (green) is on.
   B. Power to terminals 11 and 21 on timer.
3. 3. Timer set for timed cooking.
   A. A. Timer contacts 11/13 and 21/23 close.
      1) Timer motor energized through contacts 11/13.
      2) Steam solenoid and cavity relay K1 energized through contacts 21/23.
         a. Cook light (red) is on.
      3) Cavity relay K1 N.O. contacts 3/5 close. Cavity cold water condenser (CWC) solenoid is energized to cool cavity drain condensate.
         a. If the upper and lower compartment timers are both set, cavity CWC solenoid is energized through relay 1 contacts 3/5. If lower compartment timer is the only timer set, cavity CWC solenoid is energized through relay 1 N.C. 1/5 contacts.
4. Timer contacts 11/13 and 21/23 open.
   A. Timer contacts 11/13 and 21/23 open.
      1) Timer motor de-energized.
      2) Steam solenoid and cavity relay 1 de-energized (contacts 3/5 open).
         a. a. Cook light (red) is off.
   B. Timer contacts 11/14 close and energize buzzer (upper or lower cooking compartment timer).
      1) Buzzer remains energized until: Timer turned to OFF; New time or CONSTANT steam selected; Or power switch turned off.

## DSI BURNER

1. **Power On.** Power switch is switched to ON position.
2. **Fill Stage 1.** Generator begins to fill through the fast fill solenoid valve through N.C. contacts wire (#17) on water level control board.
3. **Low Level Probe Confirmation.** Water fills to low level probe (LLCO) until confirmed by the right LED on water level control board. LLCO N.O. and N.C. contacts will operate.
4. **Water Level Control Board.** Power is applied through now operated N.O. contacts of WLC (#19) to K3 N.O. contacts and to common terminal on operating pressure switch.
5. **Slow Fill Water Valve.** Water will continue to fill through slow fill valve from wire (#20) on water level control HL.
6. **Pressure Switch.** Power will pass through N.C. contacts of pressure switch to the K3 relay to the ignition module through wire #23 to P.SW and TH Terminal of the module.
7. **Ignition Module.** 120VAC Power applied through wire #23 to the P.SW and TH terminal of the module.
8. **Blower Power Burner.** 120 VAN Power applied to power burner blower from terminal and on ignition module.
9. **Gas Valve Transformer.** 120 VAC Power applied to transformer through terminals V1 and V2 of ignition module.
10. **Gas Valve.** 24 VAC Applied to gas valve. Gas valve turns on allowing burner to ignite with the assistance of the spark ignition.
11. **Flame Sense.** Senses flame of burner and sends signal back to ignition module on S1 terminal of the module to keep the burner lit.

12. **Generator Initial Heat Up.** Generator begins to heat up until pressure switch reaches 3.0-3.5 PSI. Pressure switch contacts operate applying power to wire (#28) to compartment controls.
13. **High Level Probe Confirmation.** Fill cycle stops when high-level probe is satisfied, shutting off the slow fill solenoid and turning off left LED on the water level control board.
14. **Fill Stage 2.** The second state of filling ends when the high-level water level probe is satisfied.
15. **Ready Status.** Compartments will be at ready status and green ready light illuminated when pressure switch reaches 3.0-3.5 PSI. This will stop the heating process and allow the compartments to be operated.
16. **Generator Full Pressure.** Generator is at full operating pressure between 3.0-3.5 PSI.
17. **Cooking.** Compartment door shut, timer set, cooking cycle begins and read cook light is illuminated. Steam valve(s) energized; steam enters compartment(s) and cooking begins.
18. **Generator Low Pressure**. Ignition system and burner operation will restart at 2.5-3.0 PSI as long as the LLCO probe is satisfied.
19. **Generator Water Level.** When the water level in the generator drops below the low probe, the water level control will initiate a fill cycle until water level reaches high-level probe again.
20. **Cold Water Condensate Thermostat.** Thermostat is located in the drain assembly and supplies power to cold-water Condensate solenoid valve when temperature of the water/ steam going down reaches 140 degrees.
21. **End Cook Cycle.** When timed cook cycle ends, the timer supplies power to buzzer and it sounds, removes 120VAC from the steam solenoid valve(s) and cook light. Cook cycle ends.
22. **Power Off.** Power switch is switched to off position and initiates the drain cycle.
23. **Drain.** Power is supplied to drain timer. Drain valve is powered for approximately 16 minutes.

## HSI BURNER

1. **Power On.** Power switch is switched to ON position.
2. **Fill Stage 1.** Generator begins to fill through the fast fill solenoid valve through N.C. contacts wire (#17) on water level control board.
3. **Low Level Probe Confirmation.** Water fills to low level probe (LLCO) until confirmed by the right LED on water level control board. LLCO N.O. and N.C. contacts will operate.
4. **Water Level Control Board.** Power is applied through now operated N.O. contacts of WLC (#19) to K3 N.O. contacts and to common terminal on operating pressure switch.
5. **Slow Fill Water Valve.** Water will continue to fill through slow fill valve from wire (#20) on water level control HL.
6. **Pressure Switch.** Power will pass through N.C. contacts of pressure switch to the K3 relay coil energizing and closing its contacts, common and normally open.
7. **Ignition Module.** 120VAC Power applied through now operated N.O. contacts of K3 relay to ignition module through wire #23, then to terminal of the module.
8. **Blower Assembly.** 120 VAC Power applied to blower through K3 contacts common and normally open with the energizing of K3 relay, energizing the motor through wires #23 hot and #22 neutral.
9. **Hot Surface Igniter.** 120VAC power applied to hot surface igniter through terminal HS1 and HS2 of ignition module. HSI begins to glow.
10. **Gas Valve Transformer.** 120 VAC Power applied to transformer through terminals V1 and V2 of ignition module.
11. **Gas Valve.** 24 VAC is applied from transformer to gas valve through cord rectifier, which converts it over to 24 VDC at pins 1 and 5 at gas valve terminals. Gas valve turns on allowing burner to ignite with the assistance of the hot surface igniter.
12. **Flame Sense.** Senses flame of burner and sends signal back to ignition module on S1 terminal of the module to keep the burner lit.
13. **Generator Initial Heat Up.** Generator begins to heat up until pressure switch reaches 3.0-3.5 PSI. Pressure switch contacts operate applying power to wire (#28) to compartment controls.
14. **High Level Probe Confirmation.** Fill cycle stops when high-level probe is satisfied, shutting off the slow fill solenoid and turning off left LED on the water level control board.
15. **Fill Stage 2.** The second state of filling ends when the high-level water level probe is satisfied.

16. **Ready Status.** Compartments will be at ready status and green ready light illuminated when pressure switch reaches 3.0-3.5 PSI. This will stop the heating process and allow the compartments to be operated.
17. **Generator Full Pressure.** Generator is at full operating pressure between 3.0-3.5 PSI.
18. **Cooking.** Compartment door shut, timer set, cooking cycle begins and read cook light is illuminated. Steam valve(s) energized; steam enters compartment(s) and cooking begins.
19. **Generator Low Pressure**. Ignition system and burner operation will restart at 2.5-3.0 PSI as long as LLCO probe is satisfied.
20. **Generator Water Level.** When water level in the generator drops below the low probe, the water level control will initiate a fill cycle until water level reaches high-level probe again.
21. **Cold Water Condensate Thermostat.** Thermostat is located in the drain assembly and supplies power to cold-water Condensate solenoid valve when temperature of the water/ steam going down reaches 140 degrees.
22. **End Cook Cycle.** When timed cook cycle ends, the timer supplies power to buzzer and it sounds, removes 120VAC from the steam solenoid valve(s) and cook light. Cook cycle ends.
23. **Power Off.** Power switch is switched to off position and initiates the drain cycle.
24. **Drain.** Power is supplied to drain timer. Drain valve is powered for approximately 16 minutes.

## COMPONENT FUNCTION - COMPARTMENT

The upper section of the steamer consists of two separate cooking compartments. Each compartment functions independently with its own set of controls. Power is supplied to the compartment controls after steam generator reaches operating pressure.

| | |
|---|---|
| **Switch, Power . . . . . .** | Controls 120VAC to steam generator control and cooking compartment control circuits. |
| **Switch, Door . . . . . .** | Plunger activated switch in series with timer. When door is closed and timer set, provides power to cooking compartment controls. |
| **Timer, Cooking . . . . . .** | Used to set cooking time between 0-60 minutes or select constant steam. When timer is set, energizes the steam solenoid valve. When time expires, energizes buzzer until timer is turned off. |
| **Buzzer . . . . . .** | Creates audible signal when timed cook cycle is complete |
| **Lamp, Ready . . . . . .** | Green (GN) colored lamp. On when door is closed and steam generator is pressurized pressure switch 1PAS operated (operating pressure switch closed). |
| **Lamp, Cook . . . . . .** | Red (RD) colored lamp. On when door is closed and timer is set. |
| **Lamp, Power . . . . . .** | Amber (AM) colored lamp. On when power switch is on and steam generator high limits are closed. |
| **Solenoid, Compartment Steam . . . . . .** | When energized by timer, steam solenoid opens to allow steam into cooking compartment (normally closed valve). |
| **Relay 1, Cavity . . . . . .** | Controls power to cavity cold water condenser (CWC) solenoid. |
| **Relay 2, Cavity . . . . . .** | Energized by operating pressure switch. Relay contacts control power to cooking compartment controls |
| **Solaronics Burner . . . .** | Current production burner assembly. Units built after serial number 463008610. |

## COMPONENT FUNCTION - STEAM GENERATOR

| | |
|---|---|
| **Cold Water Thermostat . . . . . .** | Monitors temperature of water entering the facility drain system. Controls the drain cooling solenoid during cooking operation and drain cycle (130□F close). |
| **Drain Cold Water Condenser (CWC) Solenoid Valve . . . . . .** | Controlled by the cold water thermostat. Mixes cold water with hot drain water from steam generator to reduce water temperature at the drain. |
| **Time Delay Relay (Drain Valve) . . . . . .** | Energized when power switch is turned off. Holds drain solenoid valve open for 1000 seconds (16.7 min) to allow generator draining. |
| **Drain Solenoid Valve (N.C.) . . . . . .** | Energized by time delay relay (drain valve) to open the valve and drain steam generator. |
| **Water Level Control (WLC) . . . . . .** | Maintains water level by monitoring conditions of the L and H water level probes. Provides low water protection by monitoring condition of LLCO probe to shut off the heat source if level drops below this probe. A probe mount with stepped heights for each probe determines the high, low and low level cut-off position in the probe housing. This allows the same length probe for all 3 locations for each probe in the probe housing. |
| **Probe (H) . . . . . .** | High water level probe connected to internal latch relay circuit on WLC. Water must reach this level before internal latch relay is energized and stop generator slow fill. (controls power to slow fill solenoid). |
| **Probe (L) . . . . . .** | Low water level probe connected to internal latch relay circuit on WLC. When water drops below this probe, power is removed from internal latch relay circuit to initiate generator refill through the slow fill solenoid. Maintains water level between L and H probes. |
| **Probe (LLCO) . . . . . .** | Low Level Cut-Off (LLCO) probe connected to WLC. Controls power to heating circuit and fast fill solenoid. |
| **Fast Fill Solenoid Valve . . . . . .** | Initial steam generator fill valve. Energized through WLC LLCO - NC contacts to fill the generator to minimum operating water level. |
| **Slow Fill Solenoid Valve . . . . . .** | Secondary steam generator fill. Energized through WLC LLCO - NO contacts and HL NO contacts to complete the generator initial fill. WLC cycles the valve as necessary to maintain water level between low and high probes. |
| **Cavity Cold Water Condenser (CWC) Solenoid Valve . . . . . .** | Controlled by cavity relay 1 in compartment control area. Solenoid is energized when timer is on. Mixes cold water with hot condensate water from cooking compartment to reduce water temperature at drain. |
| **Operating Pressure Switch . . . . . .** | Maintains generator pressure between operating set points by cycling the heating circuit on and off. From C24E 1PAS Pressure cut-out protection. Cut off pressure is 3 PSI. Removes power from heating circuit if steam generator pressure rises above the pressure switch setting. Controls power to cavity relay 2, blower motor and one side of air pressure switch. |
| **Burner System . . . . . .** | Controlled by operating pressure switch. Provides forced air to the gas/air mixture for gas pilot and main burner operation. |
| **Air Pressure Switch (Blower) . . . . . .** | Controls power to heating circuit 24VAC transformer. Ensures blower creates sufficient pressure for main burner operation.<br>**Note:** Only on units with adjustable pilot. |
| **24 VAC Transformer . . . . . .** | Supplies 24VAC for the heating circuit. |
| **Direct Spark Ignition Control Module . . . . . .** | Controls ignition to enrichment tube and main burner. Generates spark to light enrichment tube and main burner, monitors the presence of flame. |

**Gas Combination Control Valve . . . . . .** A gas solenoid that opens to allow gas flow when a call for heat is made and that also regulates the manifold gas pressure. Provides gas for the pilot burner.

**Direct Spark Ignitor/ Flame Sense Electrode . . . . . .** Ignites enrichment tube and main burner. Contain electrode for flame sense.

**Main Burner . . . . . .** Heats water in steam generator to produce steam.

## COMPONENT LOCATION

**NOTE:** Previous Production Shown, units now have flexible tubing for high temp steam.

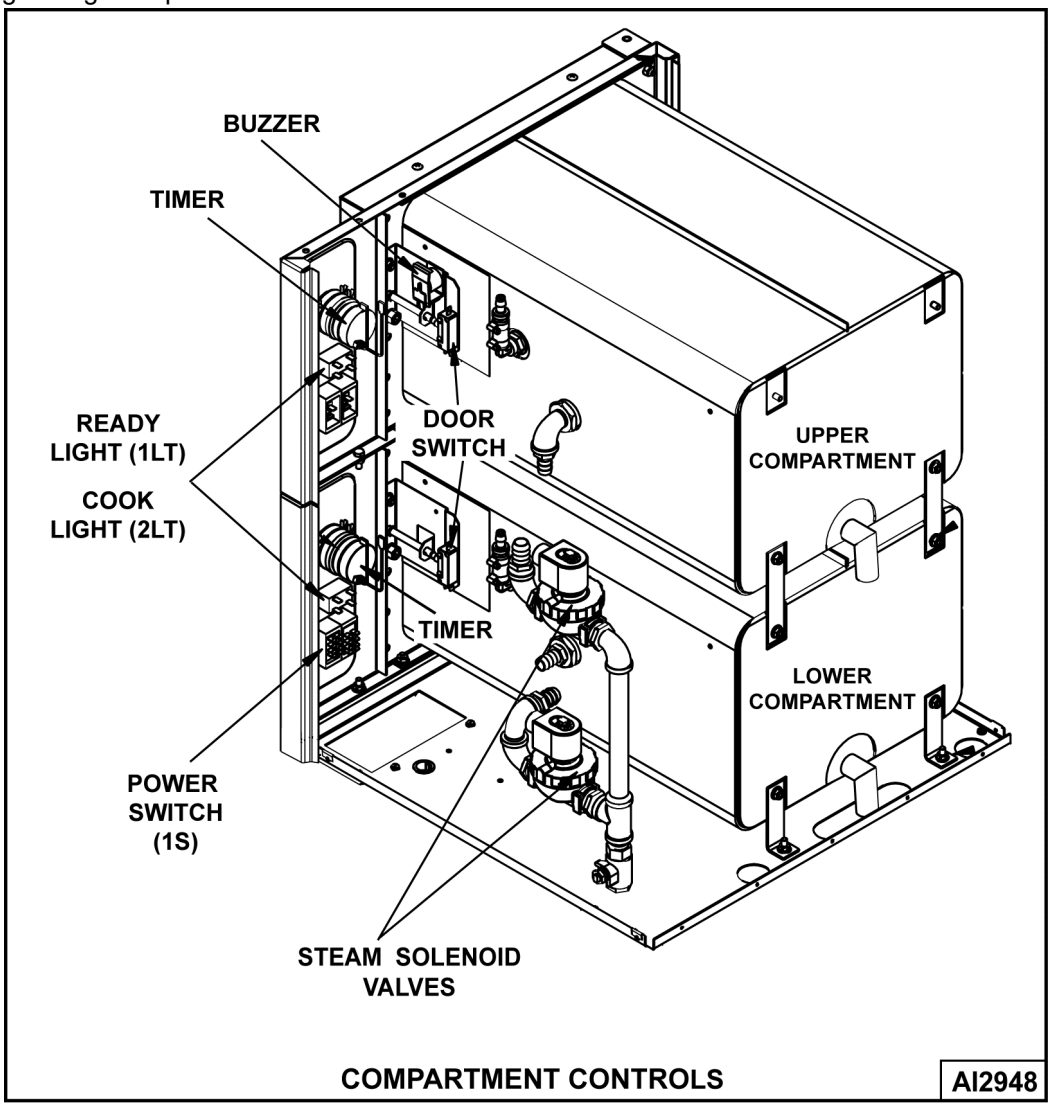


**Fig. 89**

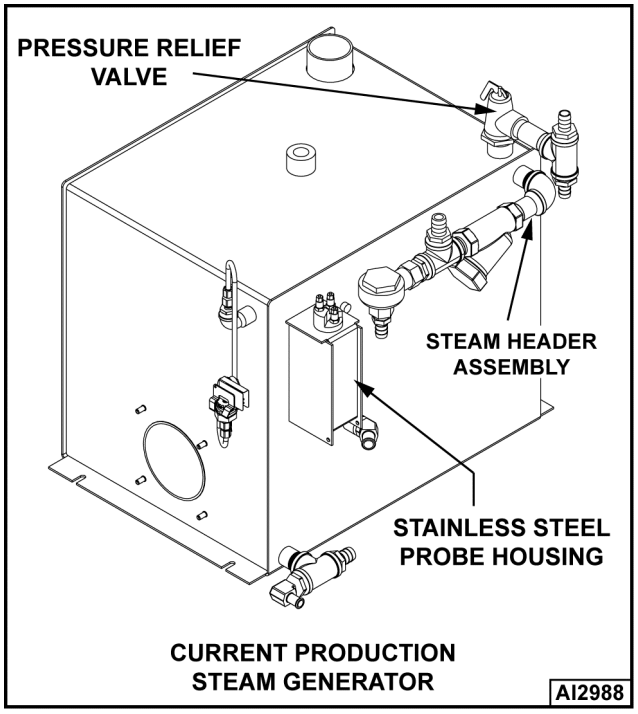


Fig. 90

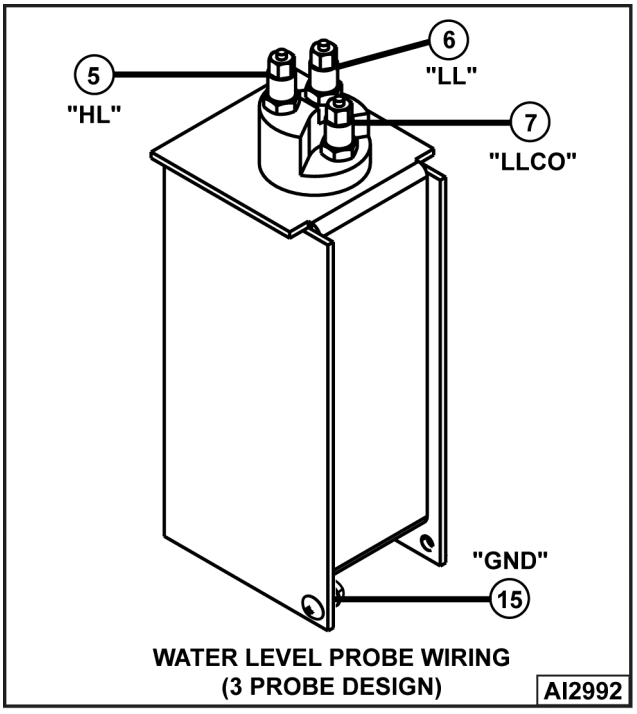


CURRENT PRODUCTION ONLY

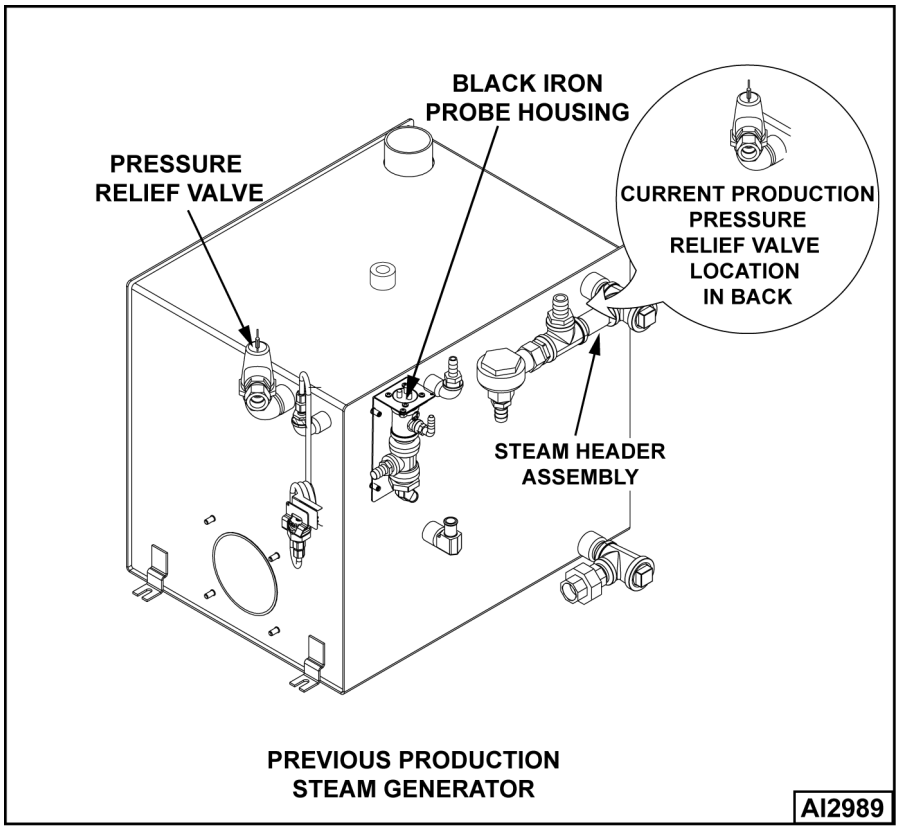


Fig. 91

# SCHEMATICS AND DIAGRAMS

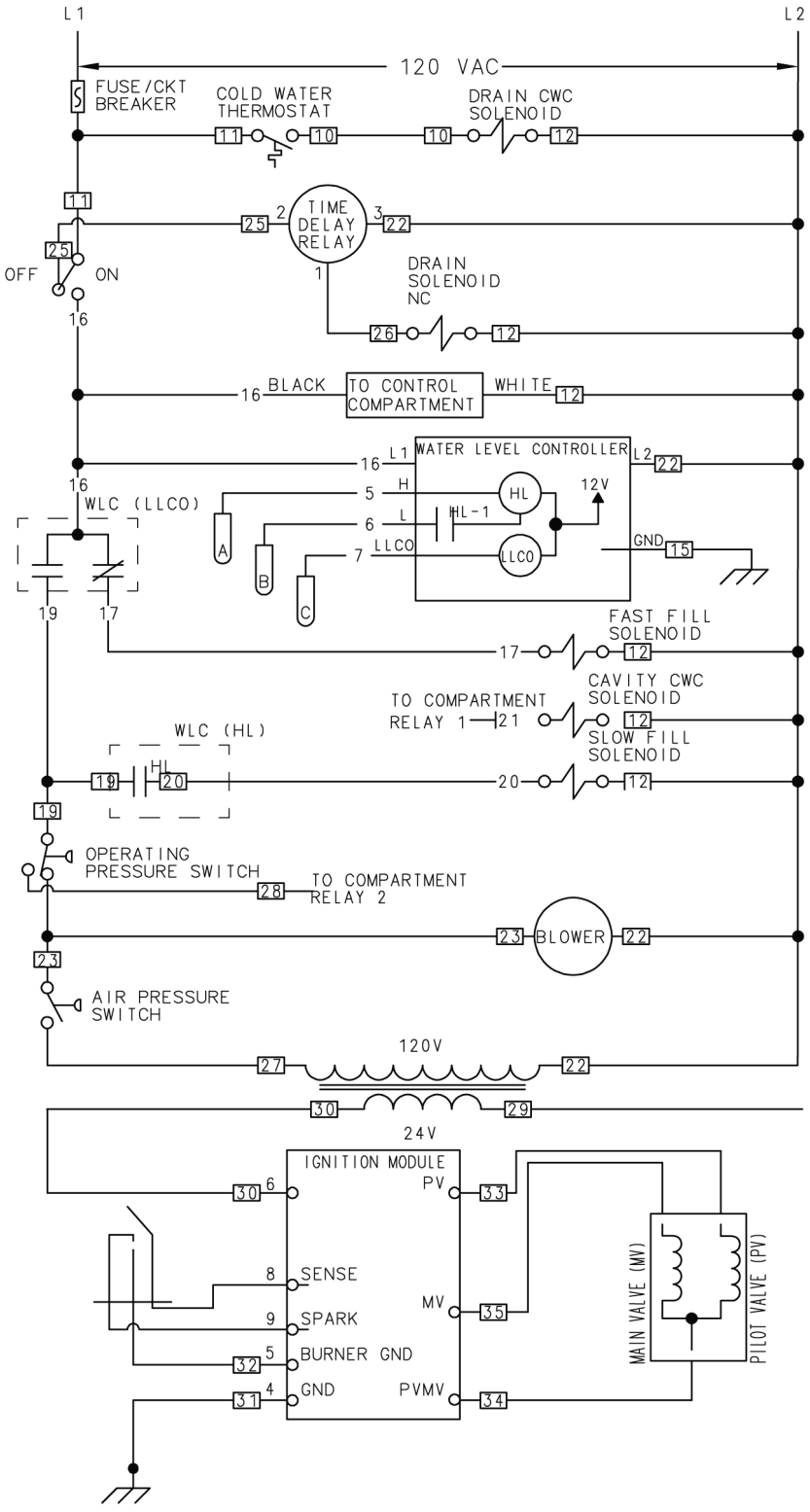


DERIVED FROM WIRE DIAGRAM 855693 Rev H

AI4865

**UNITS WITH NO K3 RELAY**

**NOTE:** Starting with production Serial No. 463008610 and higher will have blower control relay (K3) installed.

C24GA 6&10 production gas steamers will begin using a blower control relay (K3) to carry blower motor current instead of the pressure switch contacts.

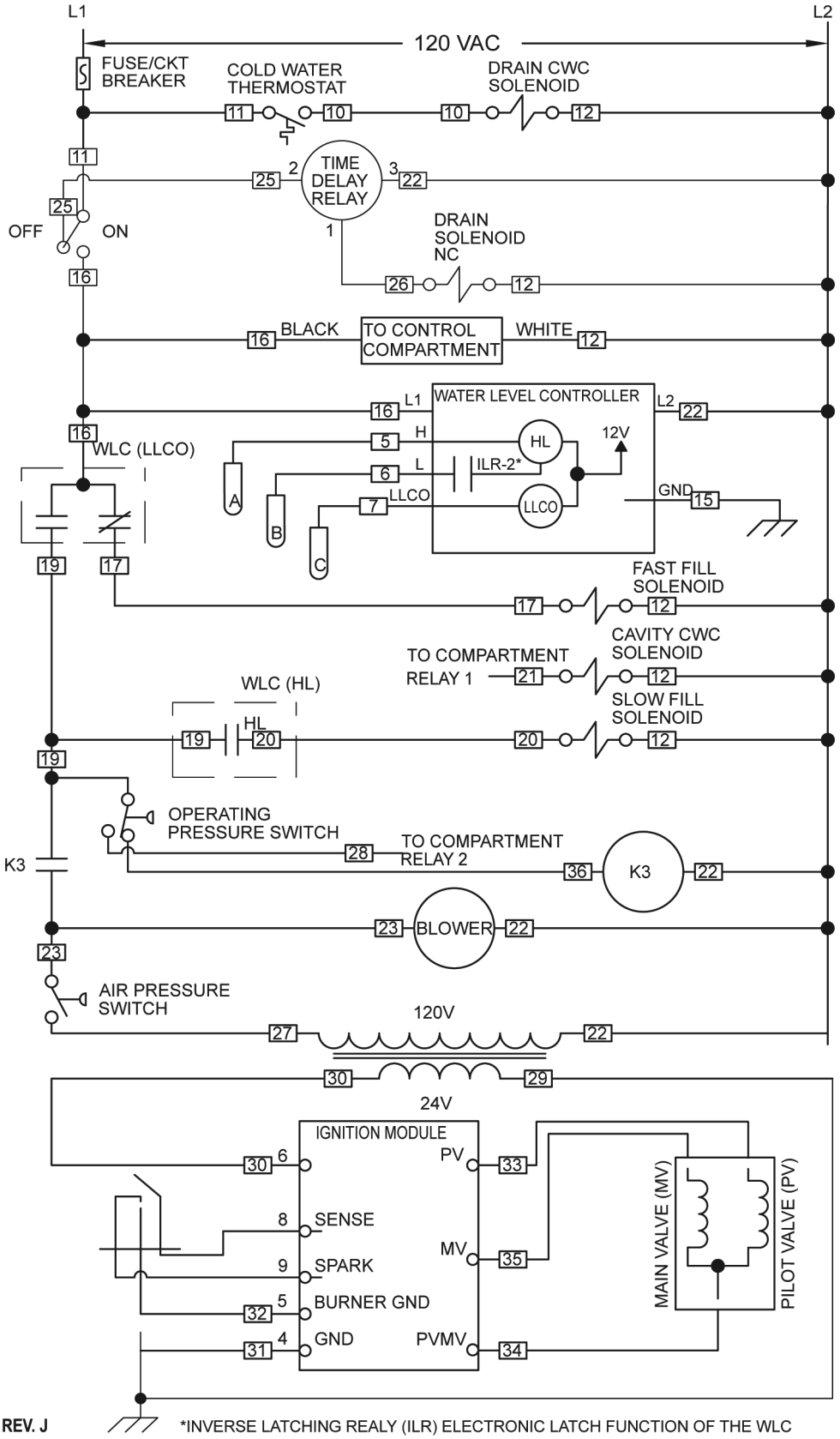


855693-1 REV. J

*INVERSE LATCHING REALY (ILR) ELECTRONIC LATCH FUNCTION OF THE WLC

AI2947

**UNITS WITH K3 RELAY AND ADJUSTABLE PILOT**

**NOTE:** Production units starting with Serial Number 463024850 have a Solaronics Burner assembly.

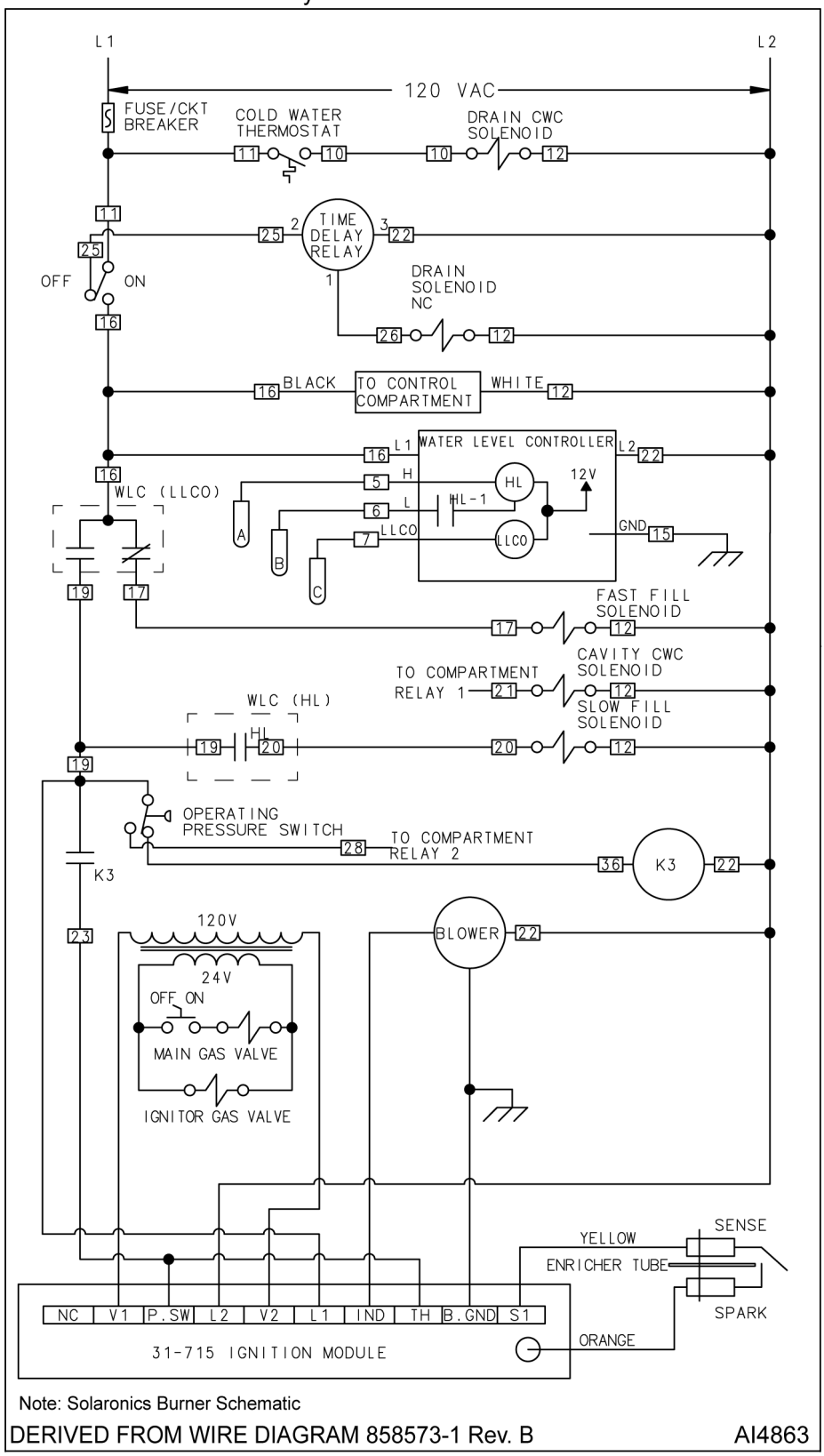


Note: Solaronics Burner Schematic

DERIVED FROM WIRE DIAGRAM 858573-1 Rev. B AI4863

**UNITS WITH K3 RELAY AND DSI IGNITER**

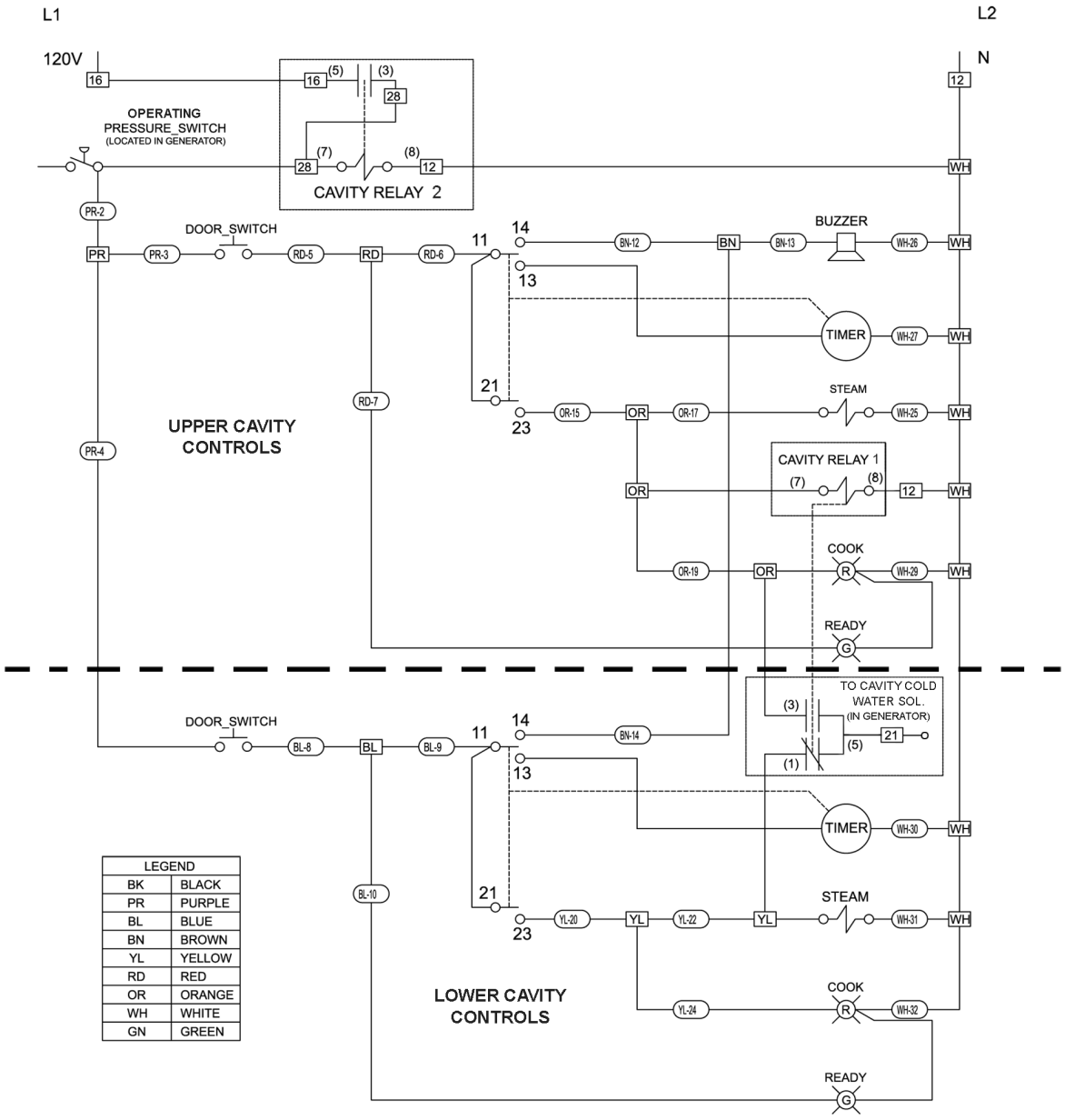


**TIMER NOTE**

**WHEN TIMER IS RUNNING, CONTACTS 11/13 AND 21/23 ARE CLOSED.**
**WHEN TIMER IS AT ZERO, CONTACTS 11/13 AND 21/23 RETURN TO OPEN STATE AND CONTACTS 11/14 ARE CLOSED.**
**WHEN TIMER IS AT CONSTANT, ONLY CONTACTS 21/23 ARE CLOSED.**

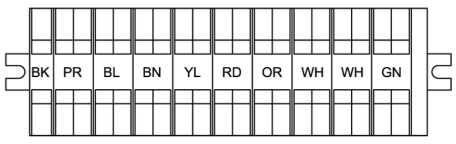


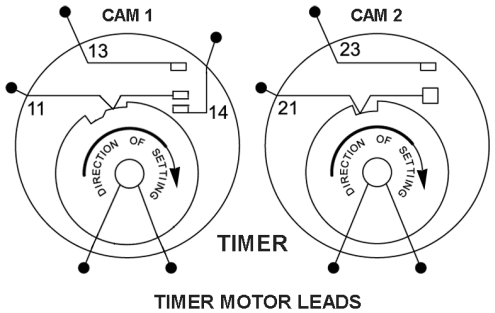


TIMER MOTOR LEADS

DERIVED FROM: 856656-1

22851

**COMPARTMENT CONTROLS**

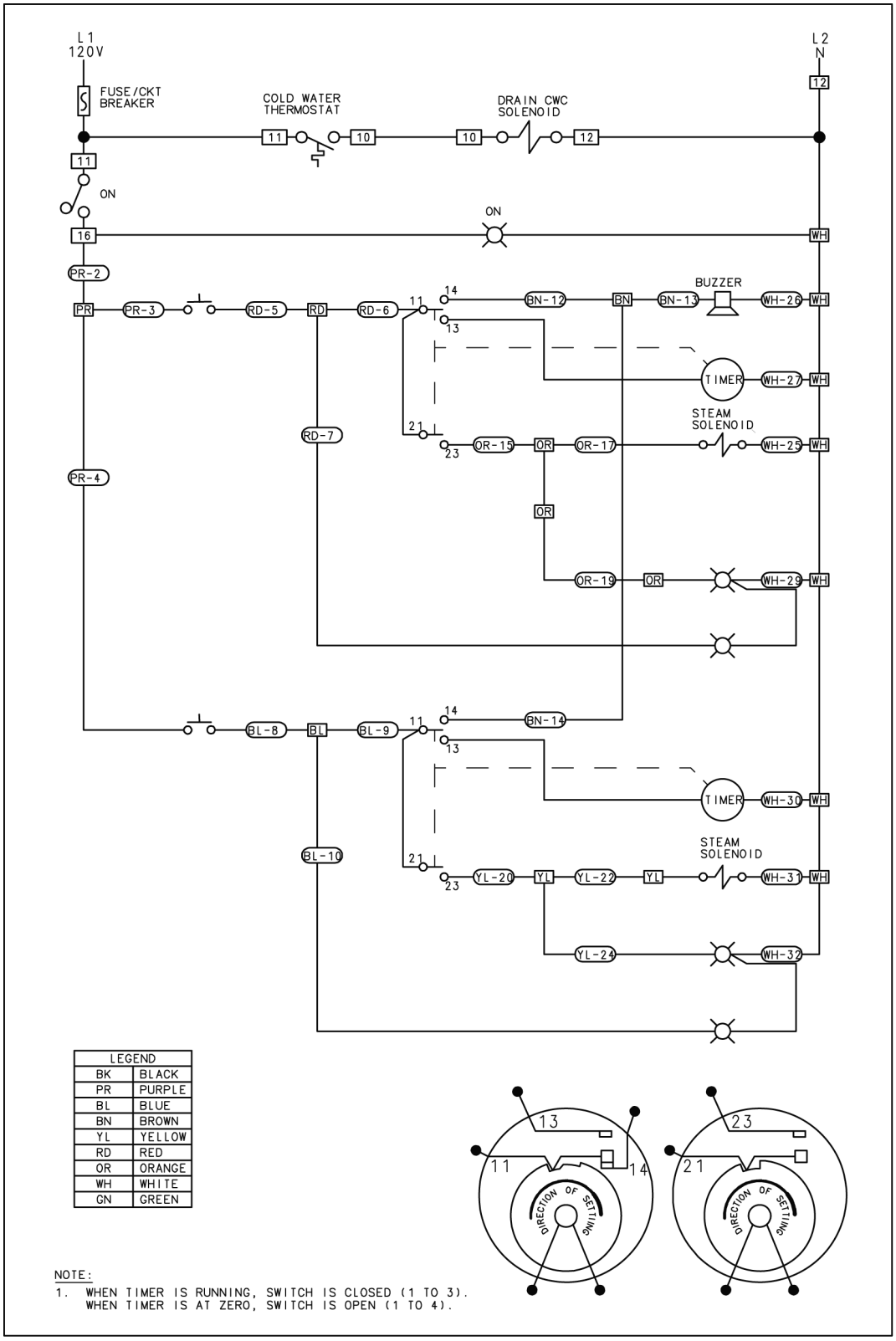


Derived from
00-857806 Rev B

AI4800

**C24DA6 and C24DA10**

# TROUBLESHOOTING

## TROUBLESHOOTING (ADJUSTABLE PILOTS ONLY)

**General**
The following paragraphs provide descriptive information of the most common troubles that can occur in the steamer. The Troubleshooting Chart provides a list of other typical fault conditions. The left-hand column of the table lists typical symptoms and the right-hand column lists probable causes and the suggested remedies

**Water Not Being Supplied to Generator**
Turn the steamer on. Check that water supply is available to the steamer. After approximately 10 minutes, if no water is present, then check for a problem with the water solenoid valve or water level control probe.

Scalants may be covering the water level control probe giving a false indication of a sufficient water level in the generator. Detach, remove and thoroughly clean the water level probe assembly to remove scalants and lime build-up. This condition indicates extremely poor water quality being supplied to the generator and/or generator clean out and deliming has not been performed. The water condition must be cleared up immediately with a proper water conditioner to avoid further problems with the steamer. Replace the water level probes and canister assembly. Water may be draining through an open generator solenoid valve as quickly as it's fed to the generator. Particles of scale trapped in the generator solenoid valve seat may prevent the valve from closing.

**Pilot Or Main Burner Will Not Light**
Check blower air pressure, air pressure switch adjustment, pilot burner adjustment, gas inlet and manifold pressures. The pilot burner orifice should be a 1/8" hole.

**NOTE:** Only on units with adjustable pilot burner.

**Drain Solenoid Valve Does Not Drain**
The drain solenoid valve is normally closed when the main power switch is in the on position. When the main power switch is set to off, the solenoid valve is energized and the generator drain valve opens for 1000 seconds.

Water contained in the generator, being under pressure, should be draining through this valve and be noticeable exhausting out the steamer drain.

If the drain operation appears to function sluggishly or not at all, scalants may be lodged in the drain pipe and/or the valve. Disconnect the drain solenoid valve from the drain line and inspect both the valve and the drain pipe fixed to the generator. If considerable scalants or lime build-up is apparent, then not only the drain solenoid valve, but also the generator and water level control must be thoroughly cleaned.

**Water Accumulating in Compartment**
Water accumulation on the bottom of the cooking compartment(s) is primarily condensed steam. Failure to drain out quickly and completely may be due to debris in the compartment drain screen. Pull screen straight out and thoroughly clean, then replace. Failure to drain completely may also be due to improper leveling of the steamer.

**Cooking Cycle Cannot Be Activated**
Inspect all wire terminals to ensure they are positive and secure before assuming any other problem. When the power switch on generator control box is in the on position, set the timer knob to 2 minutes. Both Ready lights should go off, Cooking lights should come on and steam should be entering both compartments.

**Steamer Achieves Pressure Slower Than Normal**
If the generator requires more than 18 minutes to achieve normal operating pressure of 3 – 4 psi, then check the following conditions.

A. A heavy build-up of scalants has possibly coated the interior of the generator. The insulating effect of the scalants hampers heat transfer. Unscrew and remove the clean-out port plug on the bottom of the generator. Using a small mirror examine interior of generator and if scalants and/or lime build-up is apparent, perform a generator clean-out and deliming procedure (see DELIMING THE GENERATOR). If considerable scalants are evident, both the generator drain solenoid valve and the water level control must also be examined.

B. Low incoming gas pressure. Check the incoming line and manifold gas pressures as outlined in MANIFOLD PRESSURE ADJUSTMENT under SERVICE PROCEDURES AND ADJUSTMENTS

C. Gas combination control valve malfunction. Check the incoming and manifold gas pressures as outlined in MANIFOLD PRESSURE ADJUSTMENT under SERVICE PROCEDURES AND ADJUSTMENTS.

If pressure adjustments are made and manifold pressure remains low, replace the gas combination control valve and test the steamer for proper operation.

D. Gas orifice clogged or obstructed around air shutter. It is possible for debris to become lodged in the small gas orifice opening over time. Clean out the gas orifice using a round metal instrument of the same hole diameter or slightly smaller. Clean as needed. If clogging reappears, the orifice should be removed, cleaned, and reinstalled. Remove any other foreign objects that appear to be obstructing the gas orifice or air shutter.

## TROUBLESHOOTING SEQUENCE OF OPERATION

| STEP | FUNCTION | DESCRIPTION |
|---|---|---|
| 1 | Power On | Power Switch is switched to the on position. |
| 2 | Fill Stage 1 | Boiler fills with fast fill water valve, (3.7 GPM). |
| 3 | Low Level Probe Confirmation | Low Level Probe, (LLCO), is confirmed then power is applied to burner system, fast fill valve is turned off. |
| 4 | Burner Operation | Power is supplied to operating pressure switch. |
| 5 | Blower | Blower is turned on by operating pressure switch. |
| 6 | Blower Pressure Switch | Blower air pressure switch is closed when fan is up to speed, (0.35" to 0.4" WC) and supplies 24 VAC to the ignition module. |
| 7 | Pilot Ignition | Module turns on spark ignition and supplies power to combination valve pilot valve, (PV & PV/MV terminals). |
| 8 | Flame Sense | Flame sense probe confirms pilot flame. |
| 9 | Main Burner | Ignition module supplies power to gas combination control valve, (MV & PV/MV terminals), burner ignites. |
| 10 | Generator Initial Heat Up | Generator heats up. |
| 11 | Fill Stage 2 | Generator 190°F thermostat supplies signal to water level control to continue filling with trickle valve, (0.25 GPM). |
| 12 | Generator Full | Boiler will fill till high water probe is confirmed. |
| 13 | Ready | Operating pressure switch activates ready light and supplies timer motor power at 3.0 PSI. |
| 14 | Full Pressure | Generator burner system is terminated at 3.5 to 4.0 PSI. |
| 15 | Low Pressure | Generator burner system will turn on at 2.5 to 3 PSI and operate till generator pressure reaches 3.0 PSI. |
| 16 | Water Level | Water level is electronically controlled between the upper and middle probe operating the trickle fill valve, 0.25 GPM. |
| 17 | Cooking | Timer is set and door switch is closed power will be supplied to steam valve, cavity drain valve relay, and cook light. |
| 18 | Cold Water Condensate | Thermostat located in drain assembly will supply power to cold water condensate valve to maintain drain temp below 140°F. |
| 19 | End Cook Cycle | Timer supplies power to buzzer, removes power from steam valves, cook light, & cavity drain valve relay. |
| 20 | Power Off | Power Switch is switched to the off position. |
| 21 | Power Dpwn | Power is removed from burner and water level controls. |

| STEP | FUNCTION | DESCRIPTION |
|---|---|---|
| 22 | Drain | Power is supplied to drain timer, drain valve is powered for approximately 16 minutes. |

## TROUBLESHOOTING CHART

| SYMPTOM | POSSIBLE CAUSES |
|---|---|
| Compartment leaks steam or water around door. | 1. Steamer level.<br>**NOTE:** Unit should be high in the front so cavity will drain.<br>2. High condensate water pressure, above 60 PSI static.<br>3. Worn or damaged gasket.<br>4. Cavity rear strainer clogged.<br>5. Drain line restricted or too long.<br>**NOTE:** Maximum length is 6' ft. long, for every 90" in. installed add a foot to length.<br>6. Drain not to an open gap drain. |
| Cold water condenser not operating properly. | 1. Connected to hot water supply.<br>2. Cold water condenser solenoid inoperative or plugged.<br>3. Lack of water supply Verify water is turned on and has pressure between 20-60 PSI.<br>4. Cold water condenser thermostat malfunction. Thermostat closes at 130°F.<br>5. No power to cold water condenser solenoid.<br>6. Plugged spray nozzle. |
| Steam visible inside compartment when unit is not in cook mode. | 1. Steam supply solenoid not fully closing (clogged or dirty).<br>2. Timer contacts 1 & 3 closed.<br>3. Door switch stuck closed. |
| Heat coming on without water in. | 1. Scale on water level probes (shorted to ground).<br>2. Retention of water in probe canister assembly.<br>3. Water level control board malfunction. |
| Pressure relief valve opening or leaking. | 1. Cycling pressure switch set too high.<br>2. Pressure relief valve malfunction.<br>3. Dirt or scale on valve seat.<br>4. Defective steam trap.<br>5. Leak in the supply tube to the pressure switch. |

| SYMPTOM | POSSIBLE CAUSES |
|---|---|
| Generator will not heat or build pressure. | 1. Incorrect input voltage.<br>2. Generator not filled.<br>3. Water Level Control malfunction.<br>4. Water too “pure” for probes to properly conduct electricity.<br>5. Cycling pressure switch open or set too high or set too low.<br>6. Power switch malfunction.<br>7. Ignition failure lock out.<br>8. Gas valve malfunction.<br>9. Transformer malfunction.<br>10. Polarity is incorrect.<br>11. Defective ignition module.<br>12. K3 relay malfunction.<br>13. Blower pressure switch not adjusted.<br>14. Verify gas supply pressure to the steamer. |
| Steam output low or slow cooking. | 1. Blocked steam injector ports.<br>2. Steam solenoid valve not fully opening or blocked.<br>3. Steam intake shut-off valve closed.<br>4. Cycling pressure switch malfunction or needs adjustment.<br>5. Steam header line (supply) blockage.<br>6. Pressure relief valve leaking.<br>7. Steam supply lines leaking badly.<br>8. Steam strainer clogged.<br>9. Superheater plumbed incorrectly.<br>10. Superheater cracked or clogged.<br>11. Steam trap not closing.<br>12. Incoming water supply issues (too high or too low).<br>13. Blower not adjusted.<br>14. Gas supply issues (site related). |
| Unit leaks water. | 1. Loose water, steam or drain line connections (top or base).<br>2. Water line connection clamp leaking.<br>3. High water pressure, supply pressure should be 20-60 PSI.<br>4. Water hammer. |
| Generator water level too high. | 1. Fast fill or slow fill solenoid does not shut off.<br>2. High level probe dirty or scaled (open circuit).<br>3. Water level control malfunction.<br>4. High incomming water pressure.<br>5. Plugged probe housing. |

| SYMPTOM | POSSIBLE CAUSES |
|---|---|
| Generator does not fill. | 1. Water supply not on.<br>2. Fill solenoid not opening or plugged.<br>3. Water level control malfunction.<br>4. Filter clogged. |
| Timer motor does not run. | 1. Door open.<br>2. Door switch inoperative.<br>3. Timer not getting power.<br>4. Timer motor inoperative.<br>5. Ready light circuit malfunction.<br>6. Operating pressure switch is not satisfied, K2 relay is not activated. |
| Door not closing properly. | 1. Door latch assembly malfunction or out of adjustment.<br>2. Striker adjustment.<br>3. Worn door bushings.<br>4. Door gasket out of adjustment.<br>5. High water pressure on condensate line, should be 20-60 PSI. |
| Door won’t open or hard to open. | 1. Latch won’t release.<br>2. Door held shut by internal vacuum due to improper drain connection.<br>3. Striker adjustment.<br>4. Door held shut by internal pressure.<br>5. High water pressure on non-filtered line condensate supply, should be 20-60 PSI.<br>6. Vacuum breaker malfunction. |
| Buzzer not operating. | 1. Timer malfunction.<br>2. Buzzer malfunction.<br>3. Loose wire connection. |

| SYMPTOM | POSSIBLE CAUSES |
|---|---|
| Burner won't light or won't stay lit. | 1. Gas not on.<br>2. Combustion air pressure switch malfunction.<br>3. Ignition module not receiving power.<br>4. Unit not properly grounded and/or polarity of incoming power is incorrect on automatic ignition systems.<br>5. Low incoming gas pressure.<br>6. Ignition module malfunction.<br>7. Gas combination control valve malfunction.<br>8. Generator not filling.<br>9. Water level control malfunction.<br>10. Water too "pure" for probes to properly conduct electricity.<br>11. Generator pressure switch open or set too low.<br>12. Supply line gas pressure too low.<br>13. Ignition module malfunction.<br>14. Obstruction in gas orifice.<br>15. Pilot dirty or out of adjustment.<br>16. Flame sense wire defective 10-13k ohms on flame sense wire.<br>17. Blower speed out of adjustment<br>18. Plugged or dirty burner. |
| Pilot not lit or goes out. | 1. Gas not on.<br>2. Low incoming gas pressure.<br>3. Flame sense current too low; dirty or failed pilot assembly.<br>4. Burners ignite too violently.<br>5. Flame sense wire connection corroded.<br>6. No sparking.<br>7. Wrong pilot assembly used.<br>8. Plugged pilot air orifice.<br>9. Flame sense loose or defective wire, should be 10-13k ohms on flame sense wire.<br>10. Blower speed out of adjustment. Refer to BLOWER AIR PRESSURE ADJUSTMENT (ONLY UNITS WITH ADJUSTABLE PILOT). |

| SYMPTOM | POSSIBLE CAUSES |
|---|---|
| Spark igniter not sparking. | 1. Incorrect spark gap setting.<br>2. Poor ground between pilot bracket and ignition module.<br>3. Loose, broken or damaged lead wires (including ground) from ignition module to ignitor.<br>4. Ignitor boot on ignition cable loose, damaged or missing causing excessive ignition voltage leakage.<br>5. Ceramic flame rod insulator on ignitor cracked or damaged from extreme heat.<br>6. Ignition module not receiving power.<br>7. Ignition module malfunction.<br>8. Combustion burner not operating.<br>9. Air pressure switch malfunction or not adjusted.<br>10. Check supply power for polarity and ground. |
| Main unit will spark but not light. | 1. Check solenoid on/off switch to verify it is in the **ON** position. |

## LED DIAGNOSTIC FLASH CODES (SOLARONICS BURNER SYSTEM WITH FENWAL IGNITION MODULE UNITS ONLY)




**⚠ WARNING**

**Certain procedures in this section require electrical test or measurements while power is applied to the machine. Exercise extreme caution at all times and follow Arc Flash procedures. If test points are not easily accessible, disconnect power and follow Lockout/Tagout procedures, attach test equipment and reapply power to test.**

| LED Diagnoistc Flash Codes | Description |
|---|---|
| Steady On | Control Fault |
| 1 Flash | Air Flow Fault |
| 2 Flashes | Flame With No Call for Heat |
| 3 Flashes | Ignition Lockout |