CATALOG OF REPLACEMENT PARTS



EV SERIES ELECTRIC RANGES

EV12
EV24S
EV36S
EV48S
EV60S
EV72S

 © Vulcan 2026

Table of Contents

4 PLATES
6 OVEN CONTROLS (208-240 V.)
8 OVEN CONTROLS (480 V.)
10 CONTROLS AND ELECTRICAL COMPONENTS (12 INCH)
12 CONTROLS AND ELECTRICAL COMPONENTS (24 INCH)
14 CONTROLS AND ELECTRICAL COMPONENTS (36 INCH)
16 BODY (12 INCH)
18 BODY (24 INCH)
20 BODY (36 INCH)
22 DOOR ASSEMBLY (BEFORE 10/31/2014)
24 DOOR ASSEMBLY (AFTER 10/31/2014)
26 RANGE GRIDDLE
28 BACKSPLASH, SHELF, AND BULL NOSE (ALL SIZES)
30 OVEN ELEMENT

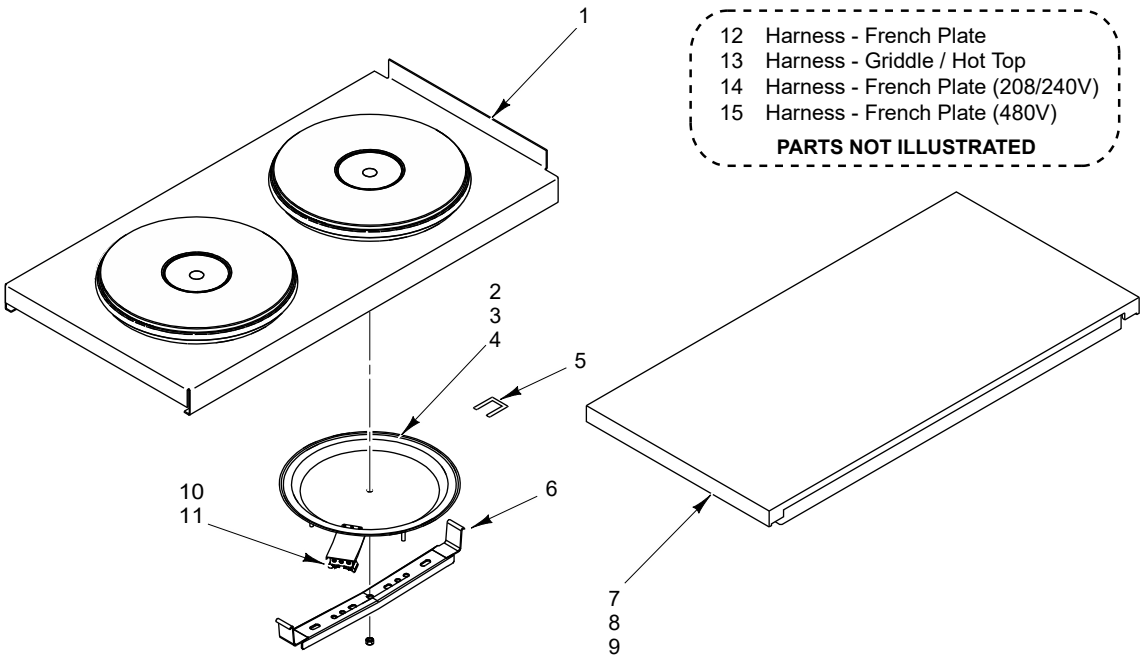

PL-59735

PLATES

PLATES

ILLUS. PL-59735	PART NO.	NAME OF PART	AMT.
1	00-927501-0000A	Plate - Aeration (French Plate)	AR
2	00-421240-00001	Plate - French E.G.O. (208 V.)	AR
3	00-421240-00002	Plate - French E.G.O. (240 V.)	AR
4	00-421240-00003	Plate - French E.G.O. (480 V.)	AR
5	00-415049-00001	Strap - Jumper	AR
6	00-415048-00001	Clamp	AR
7	00-421320-00001	Top - Hot (208 V.)	AR
8	00-421320-00002	Top - Hot (240 V.)	AR
9	00-421320-00003	Top - Hot (480 V.)	AR
*10	00-335223-00001	Terminal Block Assy. (Plate) (208-240 V.)	AR
*11	00-335223-00002	Terminal Block Assy. (Plate) (480 V.)	AR
12	00-961808-000G1	Harness - French Plates (Infinite Switch to Element)	AR
13	00-961808-000G2	Harness - Griddle / Hot Top (Thermostat to Element)	AR
14	00-927608-000G1	Harness - French Plate (208/240 V.)	AR
15	00-927608-000G2	Harness - French Plate (480 V.)	AR

* (Service part, not required if the French Plate is being replaced.)

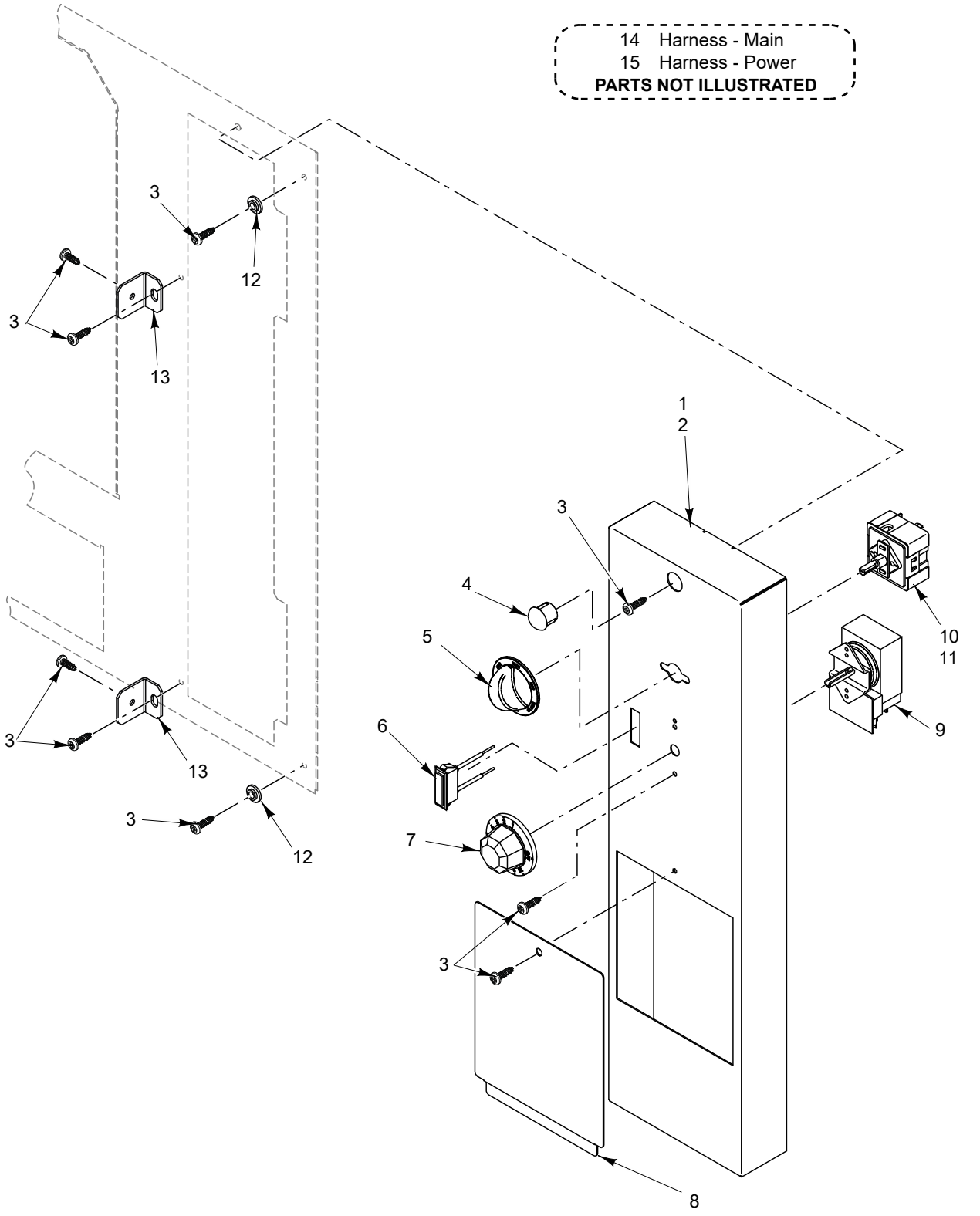

OVEN CONTROLS
(208-240 V.)

OVEN CONTROLS
(208-240 V.)

ILLUS. PL-59734	PART NO.	NAME OF PART	AMT.
*1	00-927506	Panel - Control, Electric	1
**2	00-961562-000EV	Panel - Oven	1
3	00-730228	Self-Tapping Screw 10-24 x 1/2 Phil. Truss Hd.	AR
*4	00-928068-00001	Plug	1
5	00-927603-00001	Knob - Infinite Switch	1
6	00-428900-000G3	Light - Indicator	1
7	00-418060-00002	Dial - Thermostat	1
8	00-927507	Door - Access	1
9	00-411506-00014	Thermostat (175-550 Deg. F)	1
10	00-411503-00004	Switch - Infinite Switch	1
11	NS-047-80	Lock Nut 3/8-24 Hex	1
**12	00-961551	Bracket - Oven Panel	2
**13	00-961552	Washer - Shoulder	2
14	00-927533-000G1	Harness - Main (LH)	1
15	00-927541-000G1	Harness - Power	1

* Before June 2017
** Starting June 2017

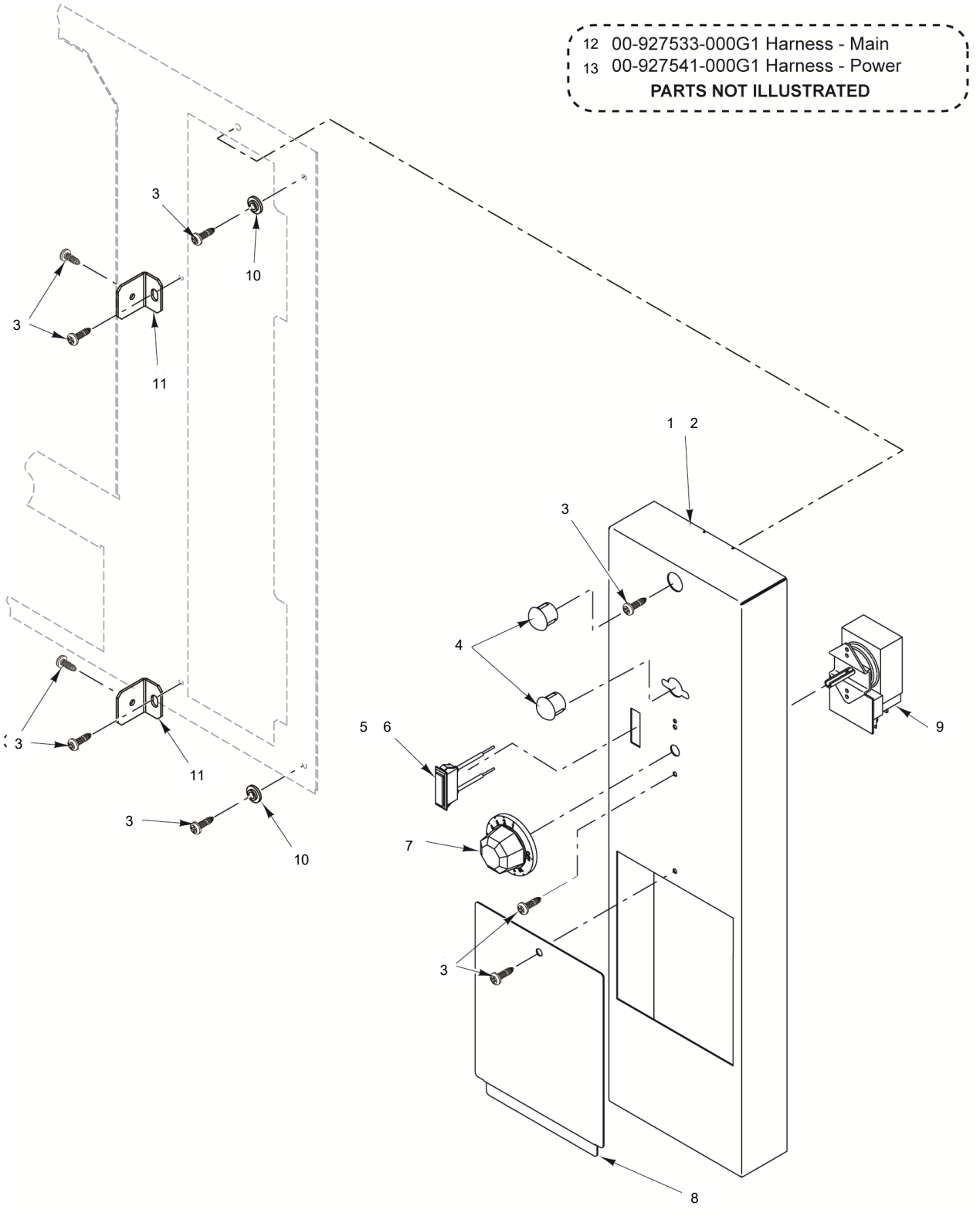

OVEN CONTROLS
(480 V.)

OVEN CONTROLS
(480 V.)

ILLUS. PL-65169	PART NO.	NAME OF PART	AMT.
*1	00-927506	Panel - Control, Electric	1
**2	00-961562-EV480	Panel - Oven	1
3	00-730228	Self-Tapping Screw 10-24 x 1/2 Phil. Truss Hd.	AR
*4	00-928068-00001	Plug	2
5	00-428900-000G3	Light - Indicator	1
6	00-417876-00001	Resistor (300 K., 1/4 W.)	1
7	00-418060-00002	Dial - Thermostat	1
8	00-927507	Door - Access	1
9	00-411506-00014	Thermostat (175-550 Deg. F)	1
**10	00-961552	Washer - Shoulder	2
**11	00-961551	Bracket - Oven Panel	2
12	00-927533-000G1	Harness - Main (LH)	1
13	00-927541-000G1	Harness - Power	1

* Before June 2017
** Starting June 2017

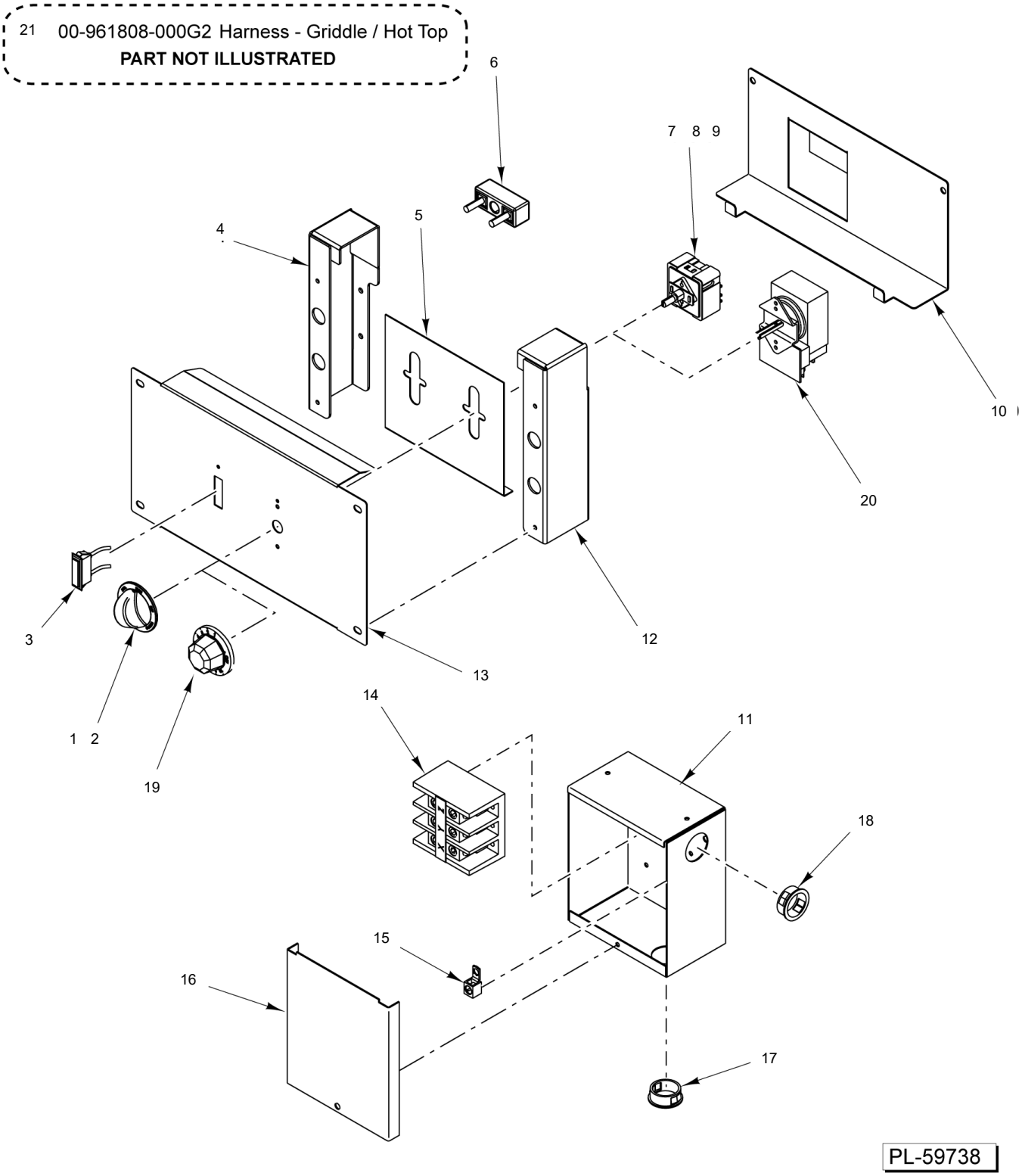

CONTROLS AND ELECTRICAL COMPONENTS (12 INCH)

CONTROLS AND ELECTRICAL COMPONENTS (12 INCH)

ILLUS. PL-59738	PART NO.	NAME OF PART	AMT.
*1	00-927603-00001	Knob - Infinite Switch (208 V. & 240 V. Units Only)	AR
*2	00-412251-00003	Knob (4 Position Switch) 480 V. (480 V. Units Only)	AR
3	00-428900-000G1	Indicator - Light (Hot Top & Griddle Units Only)	1
4	00-921883	Bracket - Manifold Cover (LH)	1
5	00-497496	Stiffener (12 In.)	1
6	00-417934-000G1	Block Assy. - Porcelain.	1
*7	00-411503-00004	Switch - Infinite Switch (208 V. & 240 V. Units Only)	AR
*8	00-355798-00001	Switch (4-Position) (480 V. Units Only)	AR
9	NS-047-80	Lock Nut 3/8-24 Hex	1
10	00-921887-00012	Bracket - Mount	1
11	00-499075	Box - Main Power	1
12	00-921882	Bracket - Manifold Cover (RH)	1
13	00-921888-00012	Panel - Control	1
14	00-410472-00008	Block - Terminal (3-Pole)	1
15	00-417856-00001	Lug - Grounding (With Set Screw)	1
16	00-499076	Lid - Power Supply	1
17	FE-017-16	NLA - Obsolete--Bushing - Electrical Snap	1
18	FE-017-16	NLA - Obsolete--Bushing - Electrical Snap	1
*19	00-418060-00002	Dial - Thermostat	AR
*20	00-411506-00014	Thermostat (175-550 Deg. F)	AR
21	00-961808-000G2	Harness - Griddle / Hot Top (Switch / Thermostat to Element)	AR

* Unit Can Have Items 1 & 7, 2 & 8, or 18 & 19

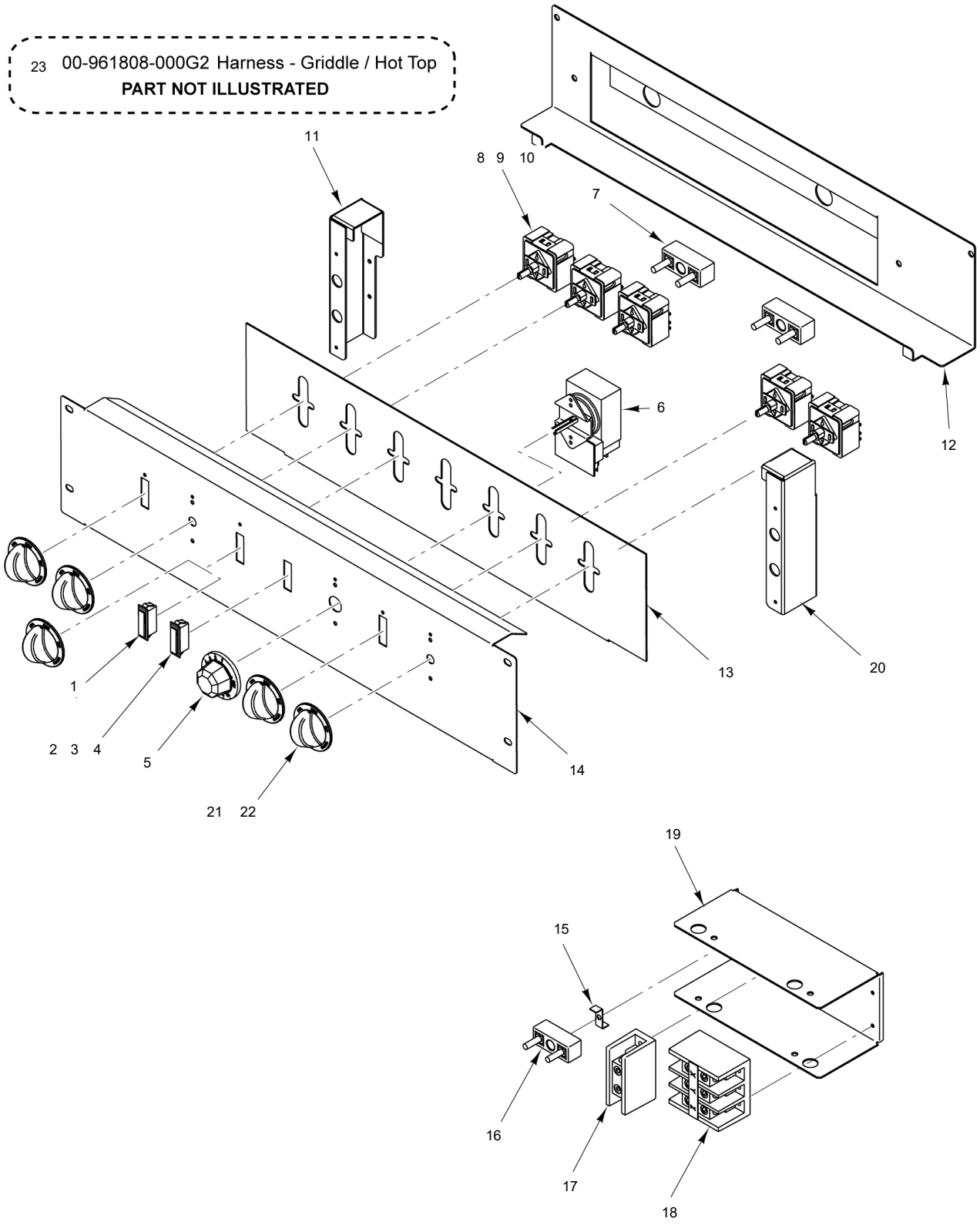

CONTROLS AND ELECTRICAL COMPONENTS (24 INCH)

CONTROLS AND ELECTRICAL COMPONENTS (24 INCH)

ILLUS. PL-59736	PART NO.	NAME OF PART	AMT.
1	00-499974-00001	Plug - Light	1
2	00-428900-000G1	Indicator - Light	AR
3	00-428900-000G3	Light - Indicator	AR
4	00-417876-00001	Resistor (300 K., 1/4 W.) (480 V. Units Only) (Not Shown)	1
*5	00-418060-00002	Dial - Thermostat	AR
*6	00-411506-00014	Thermostat (175-550 Deg. F) (Oven, Griddle & Hot Top)	AR
7	00-417934-000G1	Block Assy. - Porcelain.	AR
*8	00-411503-00004	Switch - Infinite Switch (208 V. & 240 V. Units Only)	AR
*9	00-355798-00001	Switch (4-Position) (480 V. Units Only)	AR
10	NS-047-80	Lock Nut 3/8-24 Hex	AR
11	00-921883	Bracket - Manifold Cover (LH)	1
12	00-921887-00024	Bracket - Terminal	1
13	00-927408	Panel - Stiffener (24 In.)	1
14	00-921888-00024	Cover	1
15	00-497218-00001	Clip - Porcelain Block	1
16	00-417934-000G1	Block Assy. - Porcelain.	1
17	00-410472-00009	Block - Terminal (1-Pole)	1
18	00-410472-00008	Block - Terminal (3-Pole)	1
19	00-927514	Holder - Terminal Blocks	1
20	00-921882	Bracket - Manifold Cover (RH)	1
*21	00-927603-00001	Knob - Infinite Switch (208 V. & 240 V. Units Only)	AR
*22	00-412251-00003	Knob (4 Position Switch) 480 V. (480 V. Units Only)	AR
23	00-961808-000G2	Harness - Griddle / Hot Top (Switch / Thermostat to Element)	AR

* Unit Can Have Items 5 & 6, 8 & 20, and / or 9 & 21

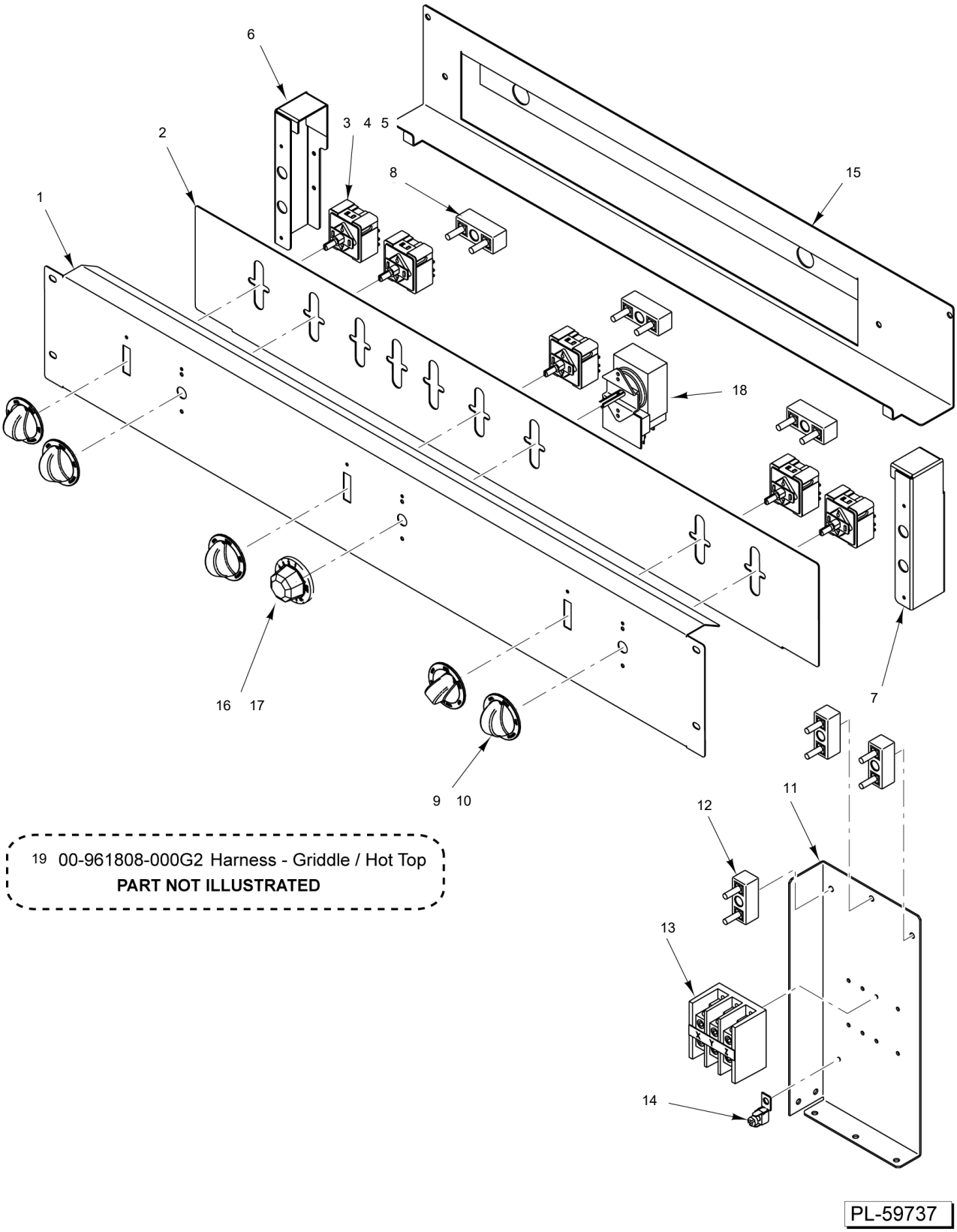

19 00-961808-000G2 Harness - Griddle / Hot Top
PART NOT ILLUSTRATED

CONTROLS AND ELECTRICAL COMPONENTS (36 INCH)

CONTROLS AND ELECTRICAL COMPONENTS (36 INCH)

ILLUS. PL-59737	PART NO.	NAME OF PART	AMT.
1	00-921888-00036	Cover	1
2	00-927503	Panel - Stiffener (36 In.)	1
*3	00-411503-00004	Switch - Infinite Switch (208 V. & 240 V. Units Only)	AR
*4	00-355798-00001	Switch (4-Position) (480 V. Units Only)	AR
5	NS-047-80	Lock Nut 3/8-24 Hex	AR
6	00-921883	Bracket - Manifold Cover (LH)	1
7	00-921882	Bracket - Manifold Cover (RH)	1
8	00-417934-000G1	Block Assy. - Porcelain.	AR
*9	00-927603-00001	Knob - Infinite Switch (208 V. & 240 V. Units Only)	AR
*10	00-412251-00003	Knob (4 Position Switch) 480 V. (480 V. Units Only)	AR
11	00-927509	Bracket - Terminal Block Mount	1
12	00-417934-000G1	Block Assy. - Porcelain.	3
13	00-410472-00008	Block - Terminal (3-Pole)	1
14	00-417856-00001	Lug - Grounding (With Set Screw)	1
15	00-921887-00036	Bracket - Terminal	1
*16	00-418060-00002	Dial - Thermostat	AR
17	00-418061-00004	Dial - Thermostat	AR
*18	00-411506-00014	Thermostat (175-550 Deg. F)	AR
19	00-961808-000G2	Harness - Griddle / Hot Top (Switch / Thermostat to Element)	AR

* Unit Can Have Items 3 & 8, 4 & 9, and / or 15 & 16

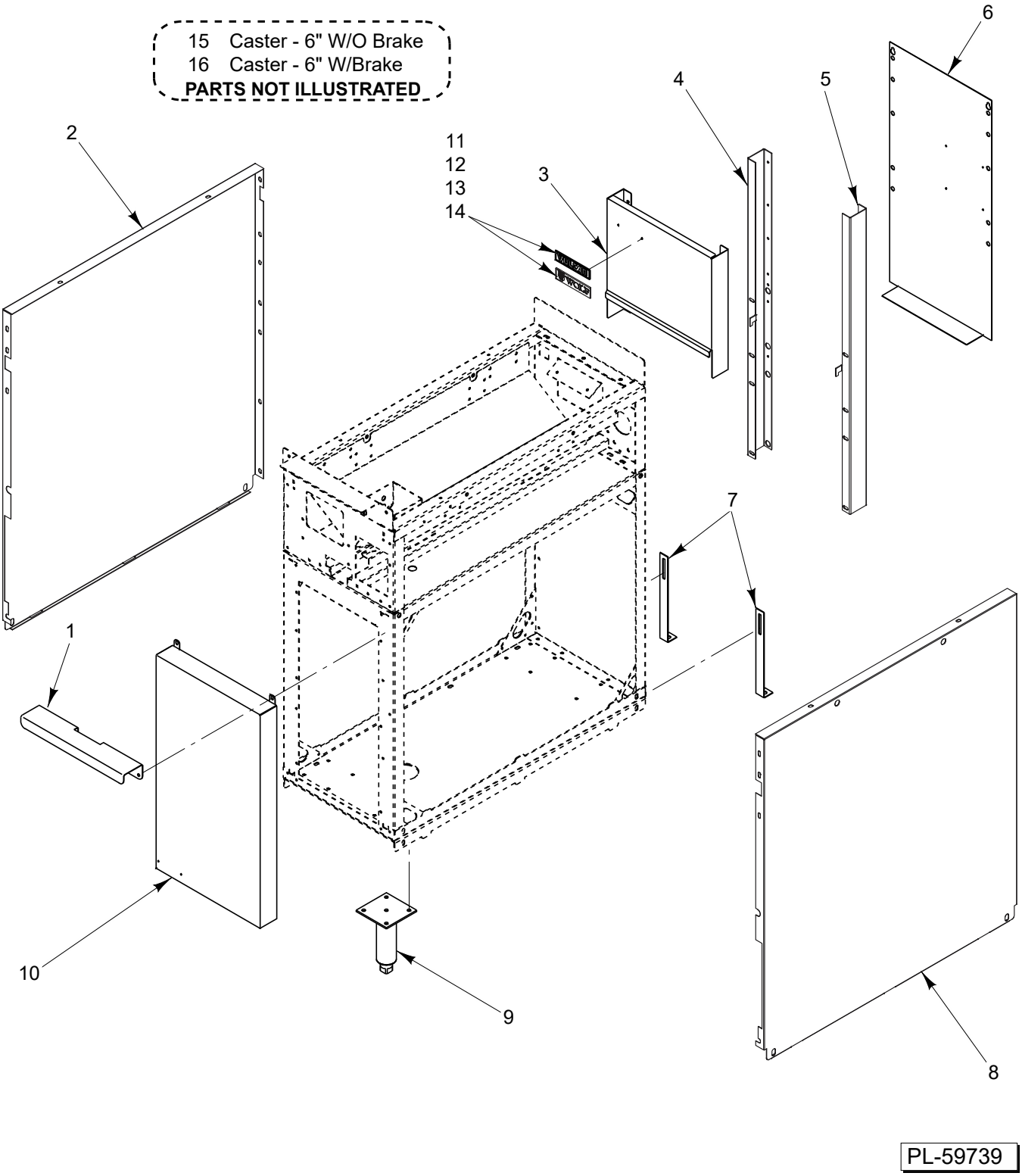

PL-59739

BODY
(12 INCH)

BODY
(12 INCH)

ILLUS. PL-59739	PART NO.	NAME OF PART	AMT.
1	00-927462	Handle - Crumb Tray	1
2	00-921807	Panel - Side (Before 02/02/26)	1
2	00-962361-000MD	Panel - Side (Starting 02/02/26)	1
3	00-921317	Backsplash (12 In.)	1
4	00-922140	Channel (LH)	1
5	00-922141	Channel (RH)	1
6	00-921713	Panel - Back (12 In.)	1
7	00-927459	Bracket - Anchor	2
8	00-921807	Panel - Side (Before 02/02/26)	1
8	00-962361-000MD	Panel - Side (Starting 02/02/26)	1
9	00-413112-00012	Leg - Plate Mount (6 In.) (SST)	4
10	00-927464	Cover - Front	1
11	00-957916-00003	Nameplate - Small (Vulcan)	1
12	00-723204	Nameplate - Small (Wolf)	1
13	NS-047-78	Pal Nut (Used with Wolf Nameplate)	2
14	NS-047-79	Pal Nut 3/16 (Used with Vulcan Nameplate)	2
15	00-958094-00001	Caster W/O Brake (6 In.)	AR
16	00-958094-00002	Caster W/ Brake (6 In.)	AR

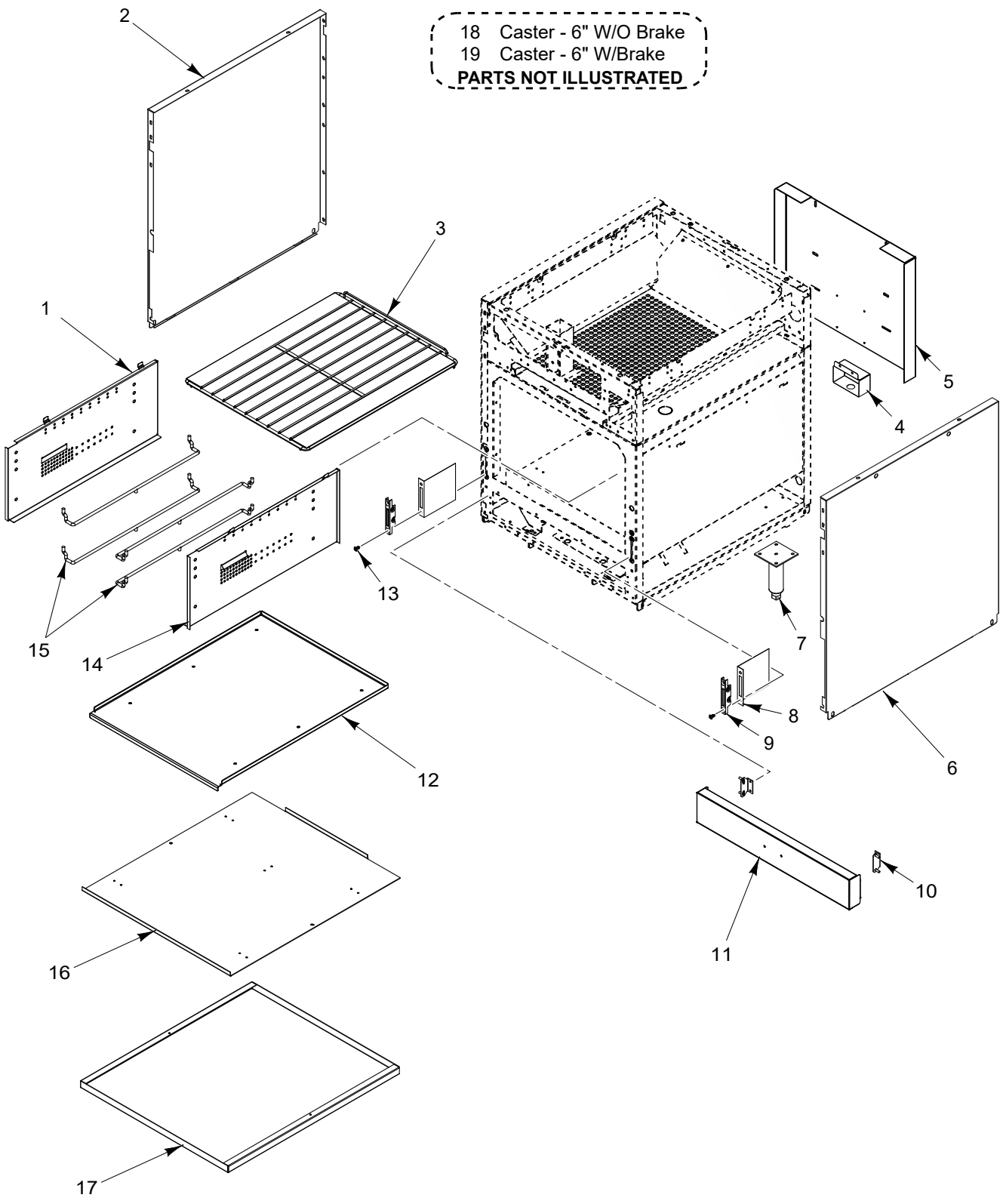
18 Caster - 6" W/O Brake
19 Caster - 6" W/Brake
PARTS NOT ILLUSTRATED
1
2
3
4
5
6
7
8
9
10
11
12
13
14
15
16
17
PL-59743

BODY
(24 INCH)

BODY
(24 INCH)

ILLUS. PL-59743	PART NO.	NAME OF PART	AMT.
1	00-921326	Side Liner - Left	1
2	00-921807	Panel - Side (Before 02/02/26)	1
2	00-962361-000MD	Panel - Side (Starting 02/02/26)	1
3	00-923508-0000A	Oven Rack (24 In.)	2
4	00-921611	Cover - Element	2
5	00-921786	Flue - Rear	1
6	00-921807	Panel - Side (Before 02/02/26)	1
6	00-962361-000MD	Panel - Side (Starting 02/02/26)	1
7	00-413112-00012	Leg - Plate Mount (6 In.) (SST)	4
8	00-921095	Insulation - Door Hinge	2
9	00-497029-00001	Door Hinge Stop	2
10	00-428179-000G1	Bracket - Kick Panel Mounting	2
11	00-921785	Kick Panel Assy. (Before 02/02/26)	1
11	00-963155-00024	Kick Panel Assy. (Starting 02/02/26)	1
12	00-923515	Cavity Bottom (24 In. Oven)	1
13	00-723369	Mach. Screw 1/4-20 x 1/2 Phil. Truss Hd.	4
14	00-921325	Side Liner - Right	1
15	00-921064	Guide - Rack	4
16	00-927402	Plate - Element Mounting (24 In.)	1
17	00-927403	Pan - Element (24 In.)	1
18	00-958094-00001	Caster W/O Brake (6 In.)	AR
19	00-958094-00002	Caster W/ Brake (6 In.)	AR

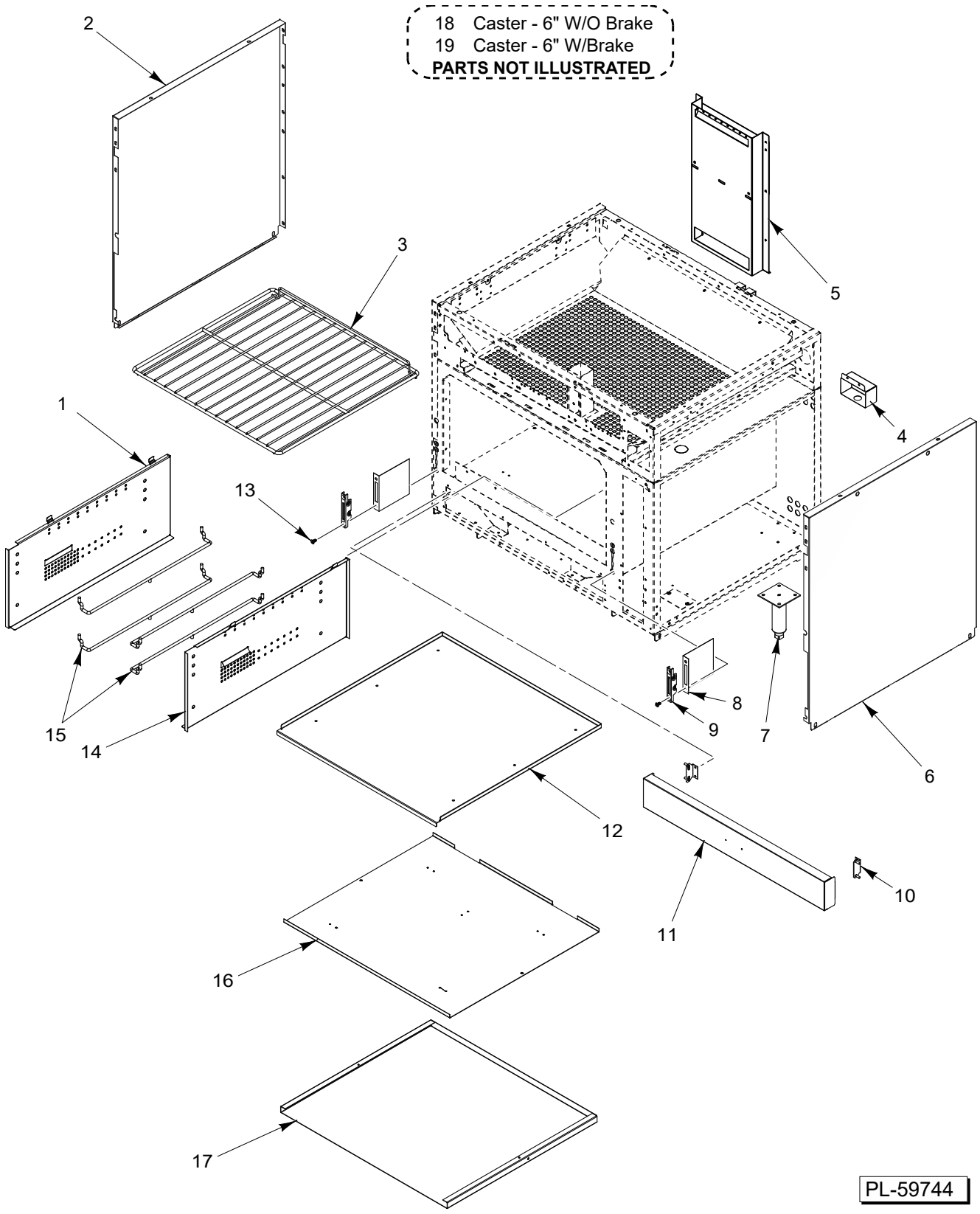
18 Caster - 6" W/O Brake
19 Caster - 6" W/Brake
PARTS NOT ILLUSTRATED
1
2
3
4
5
6
7
8
9
10
11
12
13
14
15
16
17
PL-59744

BODY
(36 INCH)

BODY
(36 INCH)

ILLUS. PL-59744	PART NO.	NAME OF PART	AMT.
1	00-921326	Side Liner - Left	1
2	00-921807	Panel - Side (Before 02/02/26)	1
2	00-962361-000MD	Panel - Side (Starting 02/02/26)	1
3	00-921010-0000A	Oven Rack (30 In.)	2
4	00-921611	Cover - Element	2
5	00-921799	Channel - Back Flue	1
6	00-921807	Panel - Side (Before 02/02/26)	1
6	00-962361-000MD	Panel - Side (Starting 02/02/26)	1
7	00-413112-00012	Leg - Plate Mount (6 In.) (SST)	4
8	00-921095	Insulation - Door Hinge	2
9	00-497029-00001	Door Hinge Stop	2
10	00-428179-000G1	Bracket - Kick Panel Mounting	2
11	00-921721	Kick Panel Assy. (Before 02/02/26)	1
11	00-963155-00030	Kick Panel Assy. (Starting 02/02/26)	1
12	00-921015	Cavity Bottom (30 In.)	1
13	00-723369	Mach. Screw 1/4-20 x 1/2 Phil. Truss Hd.	4
14	00-921325	Side Liner - Right	1
15	00-921064	Guide - Rack	4
16	00-927511-00001	Plate - Element Mounting (30 In.)	1
17	00-927510-00001	Pan - Element (30 In.)	AR
18	00-958094-00001	Caster W/O Brake (6 In.)	AR
19	00-958094-00002	Caster W/ Brake (6 In.)	AR

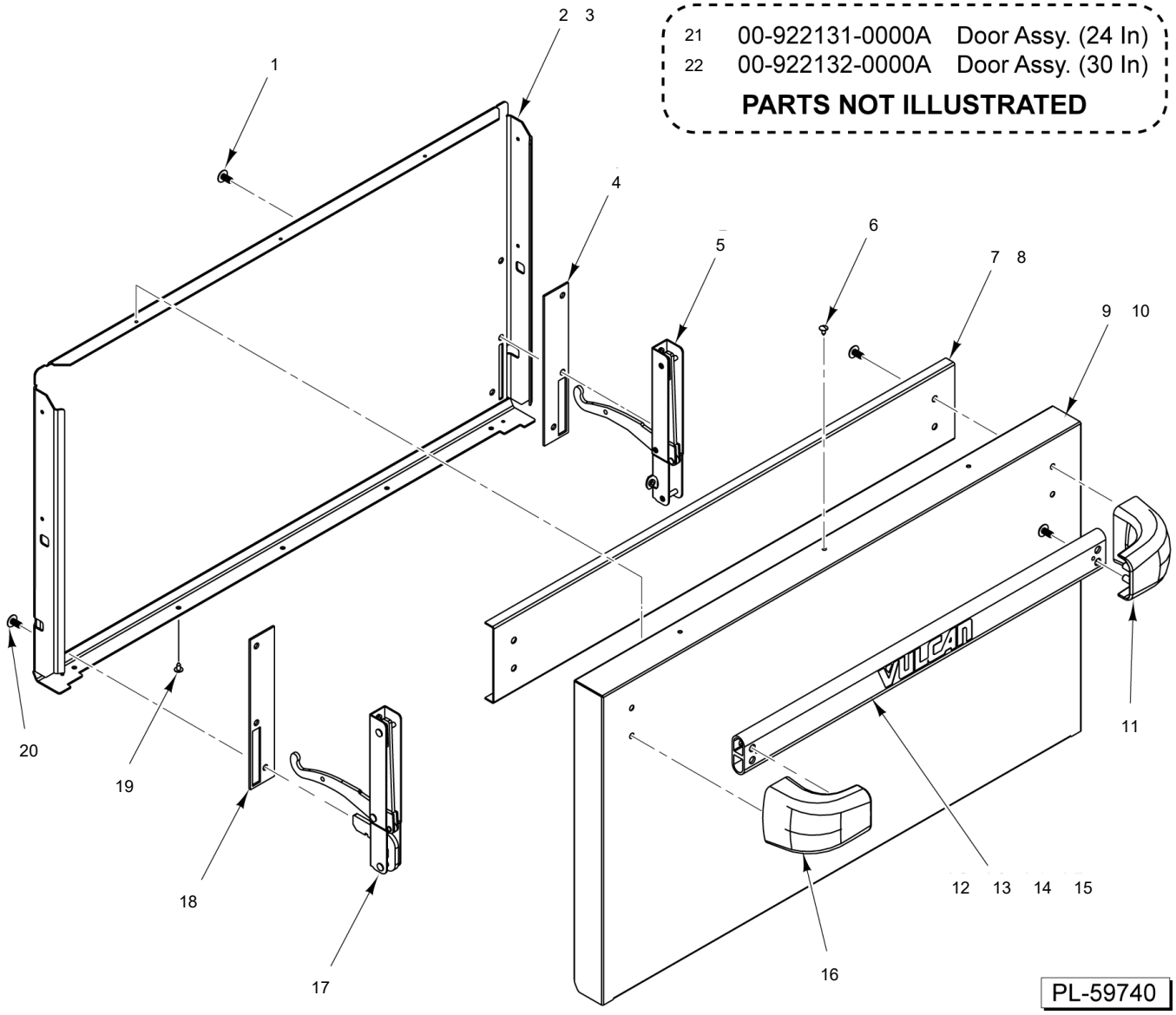

DOOR ASSEMBLY
(BEFORE 10/31/2014)

DOOR ASSEMBLY
(BEFORE 10/31/2014)

ILLUS. PL-59740	PART NO.	NAME OF PART	AMT.
1	00-723369	Mach. Screw 1/4-20 x 1/2 Phil. Truss Hd.	3
2	00-922030	Liner - Door (24 In.)	1
3	00-921022	Liner - Door (30 In.)	1
4	00-921033	Insulator - Door Hinge	1
5	00-497027-00001	Hinge - Door Spring (RH)	1
6	00-730240	Mach. Screw #8 x 1/2	3
7	00-922134	Reinforcement - Door (24 In.)	1
8	00-922133	Reinforcement - Door (30 In.)	1
9	00-921781	Panel - Door (24 In.)	1
10	00-921749	Panel - Door (30 In.)	1
11	00-922118	Bracket - Handle	1
12	00-913159-00002	Kit - Door Handle (24 In.) (Vulcan)	1
13	00-913159-00001	Kit - Door Handle (24 In.) (Wolf)	1
14	00-913159-00004	Kit - Door Handle (30 In.) (Vulcan)	1
15	00-913159-00003	Kit - Door Handle (30 In.) (Wolf)	1
16	00-922118	Bracket - Handle	1
17	00-497027-00002	Hinge - Door Spring (LH)	1
18	00-921033	Insulator - Door Hinge	1
19	00-730240	Mach. Screw #8 x 1/2	3
20	00-723369	Mach. Screw 1/4-20 x 1/2 Phil. Truss Hd.	3
21	00-922131-0000A	Door Assy. (24 In.) (Incls. Items 1, 2, 4, 5, 6, 7, 9, 11, 12, & 16 thru 20)	1
22	00-922700-0A30V	ASSY, DOOR, VULCAN, 30IN (Incls. Items 1, 3, 4, 5, 6, 8, 10, 11, 14, & 16 thru 20)	AR

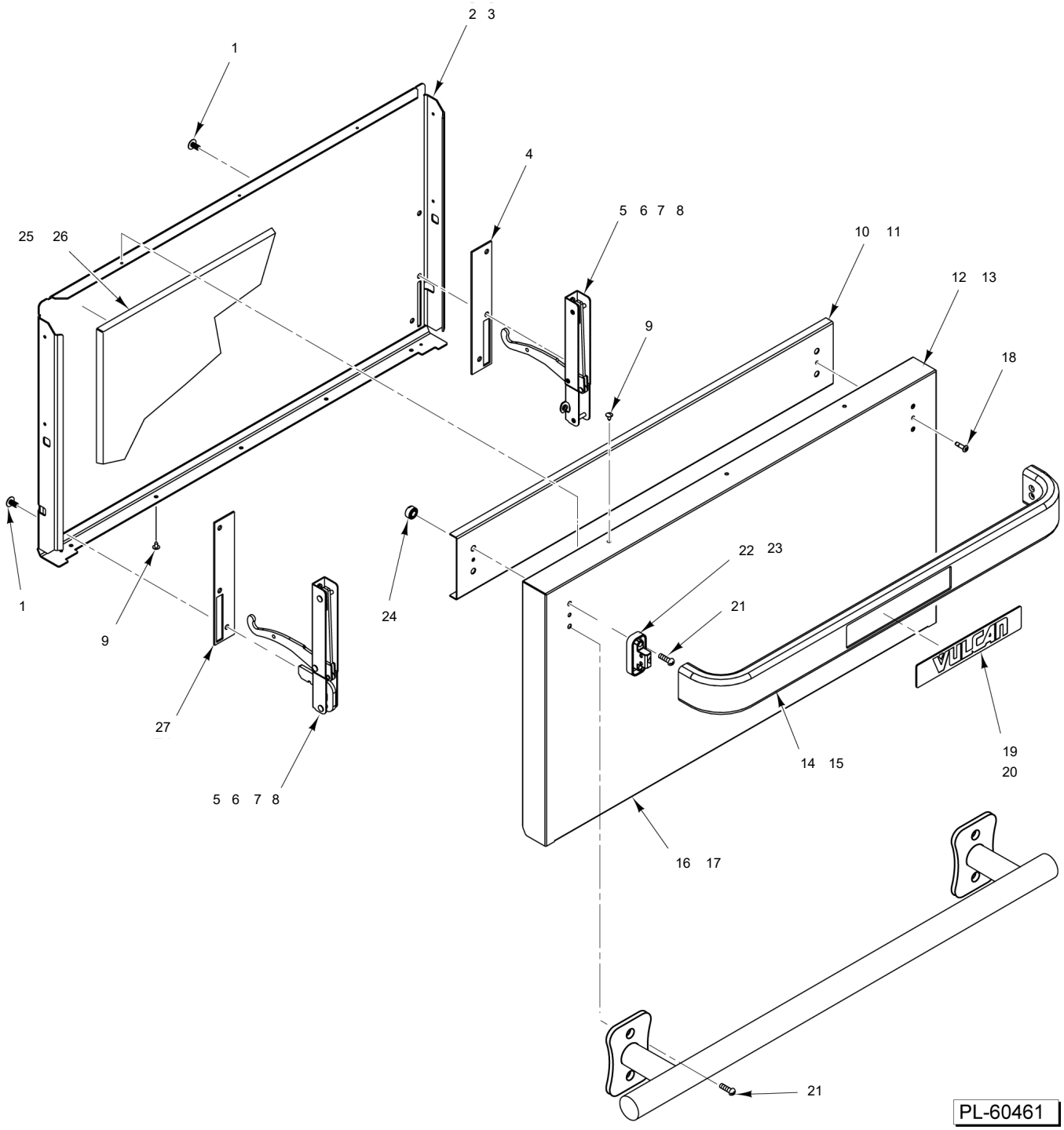

DOOR ASSEMBLY
(After 10/31/2014)

DOOR ASSEMBLY
(After 10/31/2014)

ILLUS. PL-60461	PART NO.	NAME OF PART	AMT.
1	00-723369	Mach. Screw 1/4-20 x 1/2 Phil. Truss Hd.	AR
2	00-922030	Liner - Door (24 In.)	1
3	00-921022	Liner - Door (30 In.)	1
4	00-921033	Insulator - Door Hinge	1
5	00-497027-00001	Hinge - Door Spring (RH)	1
6	00-730240	Mach. Screw #8 x 1/2	3
7	00-922702-00024	Reinforcment - Door (24 In.)	1
8	00-922702-00030	Reinforcement - Door (30 In.)	1
9	00-922701-00024	Panel - Door (24 In.)	1
10	00-922701-00030	Panel - Door (30 In.)	1
11	00-497027-00002	Hinge - Door Spring (LH)	1
*12	00-922710-00024	Handle - Door (24 In.)	1
*13	00-922710-00030	Handle - Door (30 In.)	1
14	00-922700-00A24	Door Assy. (24 In.)	1
15	00-922700-00A30	Door Assy. (30 In.)	1
16	RS-033-05	Screw	2
*17	00-922712-00001	Logo (Vulcan)	1
*18	00-922712-00002	Logo (Wolf)	1
19	00-723369	Mach. Screw 1/4-20 x 1/2 Phil. Truss Hd.	AR
*20	00-922711	Cap - Door Handle	2
21		Nut	4
22	00-923529	Insulation - Door (24 In.)	1
23	00-921102	Insulation - Door (36 In.)	1
24	00-921033	Insulator - Door Hinge	1
**25	00-961400-00024	Handle - Oven (24")	1
**26	00-961400-00036	Handle - Oven (36")	1

* Before June 2017
** June 2017 and After

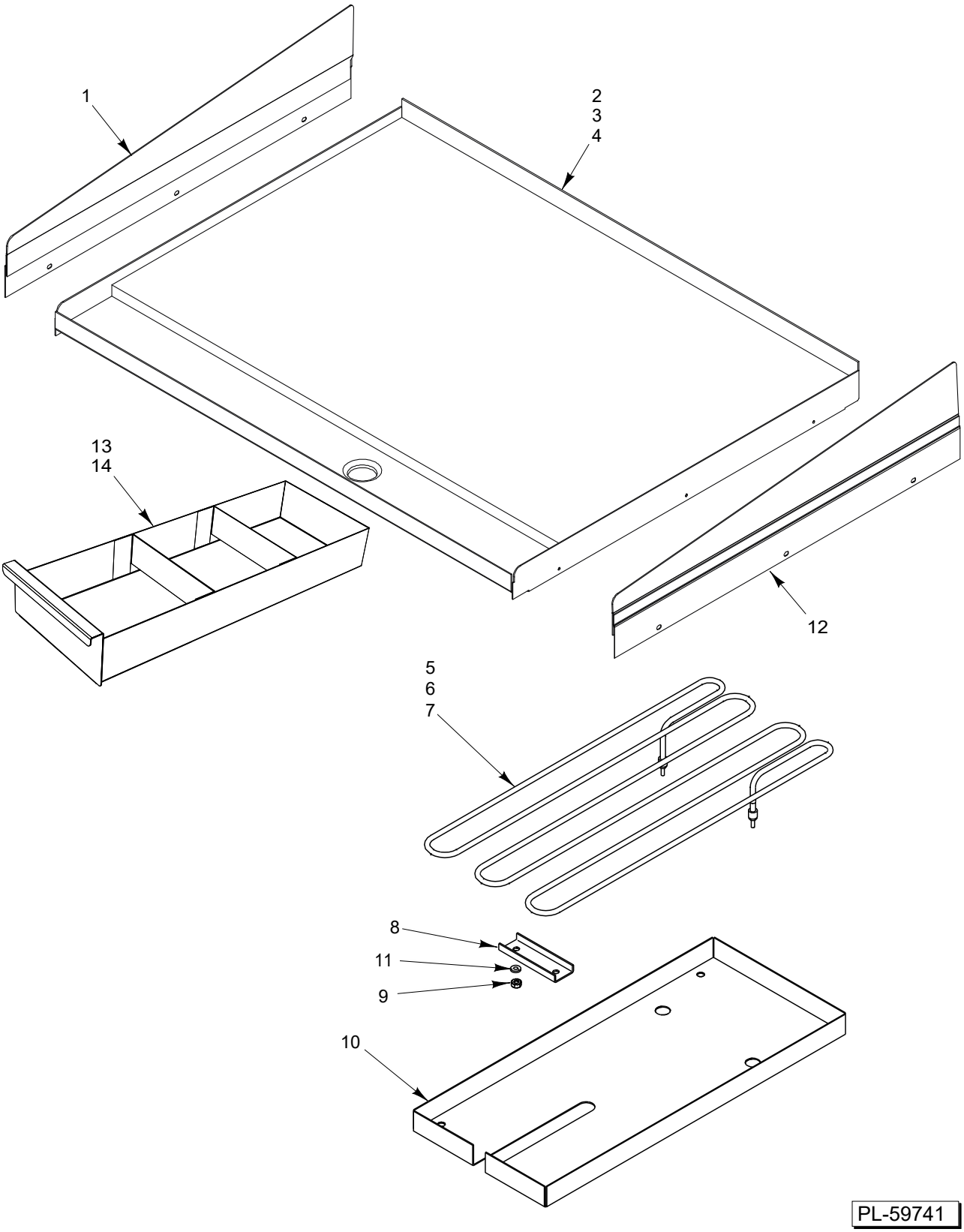

RANGE GRIDDLE

RANGE GRIDDLE

ILLUS. PL-59741	PART NO.	NAME OF PART	AMT.
1	00-926527-0000A	Splash Assy. - Outer (LH)	1
2		Griddle Plate Assy. (12 In.)	1
3	00-924511-0000A	Griddle Plate Assy. (24 In.)	1
4	00-926500-0000A	Griddle Plate Assy. (36 In.)	1
5	00-922550-0208A	Element - Griddle (208V)	1
6	00-922550-0240A	Element - Giddle (240V)	1
7	00-922550-0480A	Element - Griddle (480V)	10
8	00-927415	Brace - Griddle Element	1
9	NS-046-52	Nut Assy. 1/4-20 Hex	1
*10		Cover - Griddle Element - Included in Kit (item 5, 6 and 7)	AR
11		Lockwasher	AR
12	00-926513-0000A	Splash Assy. - Outer (RH)	1
13	00-922354-0SLIM	Grease Can 12 In.	1
14	00-922354	Grease Can 24 In. & 36 In. (Before 02/02/26)	1
14	00-963102	Grease Can 24 In. & 36 In. (Starting 02/02/26)	1

* Only available in kit. See item #5, 6, and 7 for kits.

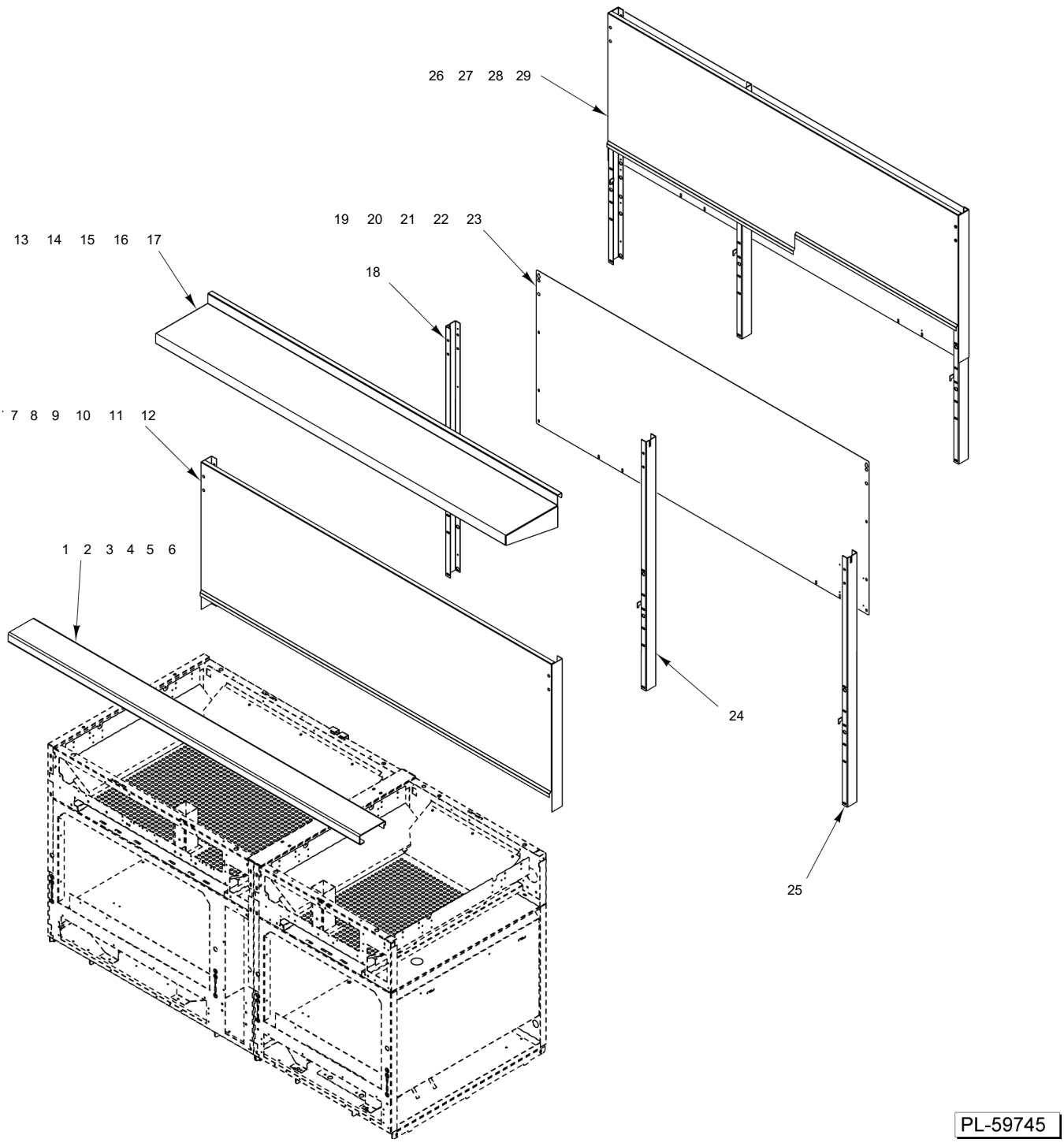

BACKSPLASH, SHELF, AND BULL NOSE (ALL SIZES)

BACKSPLASH, SHELF, AND BULL NOSE (ALL SIZES)

ILLUS. PL-59745	PART NO.	NAME OF PART	AMT.
1	00-921884-00012	Bull Nose (12 In.)	1
2	00-921884-00024	Bull Nose (24 In.)	1
3	00-921884-00036	Bull Nose (36 In.)	1
4	00-921884-00048	Bull Nose (48 In.)	1
5	00-921884-00060	Bull Nose (60 In.)	1
6	00-921884-00072	Bull Nose (72 In.)	1
7	00-921317	Backsplash (12 In.)	1
8	00-921053-00024	Backsplash (24 In.)	1
9	00-921053-00036	Backsplash (36 In.)	1
10	00-921053-00048	Backsplash (48 In.)	1
11	00-921053-00060	Backsplash (60 In.)	1
12	00-921053-00072	Backsplash (72 In.)	1
13	00-921730-00024	Shelf (24 In.)	1
14	00-921730-00036	Shelf (36 In.)	1
15	00-921730-00048	Shelf (48 In.)	1
16	00-921730-00060	Shelf (60 In.)	1
17	00-921730-00072	Shelf (72 In.)	1
18	00-921728	Support - Backsplash (LH)	1
19	00-921713	Panel - Back (12 In.)	1
20	00-923525	Panel - Back (24 In.)	1
21	00-921054	Panel - Back (36 In.) (Use two for 72 In. Units)	1
22	00-923009	Panel - Back (48 In.)	1
23	00-929007	Panel - Back (60 In.)	1
24	00-921729	Support - Backsplash (RH) (Used on 60 & 72 In. Units)	1
25	00-921729	Support - Backsplash (RH)	1
26	00-961714-0036G	Backsplash Assy. (36 In.) (Used with Griddle)	1
27	00-961714-36G24	Backsplash Assy. (36 In.) (Used with RH Griddle)	1
28	00-961714-60G24	Backsplash Assy. (60 In.) (Used with RH Griddle)	1
29	00-961714-72G36	Backsplash Assy. (72 In.) (Used with RH Griddle)	1

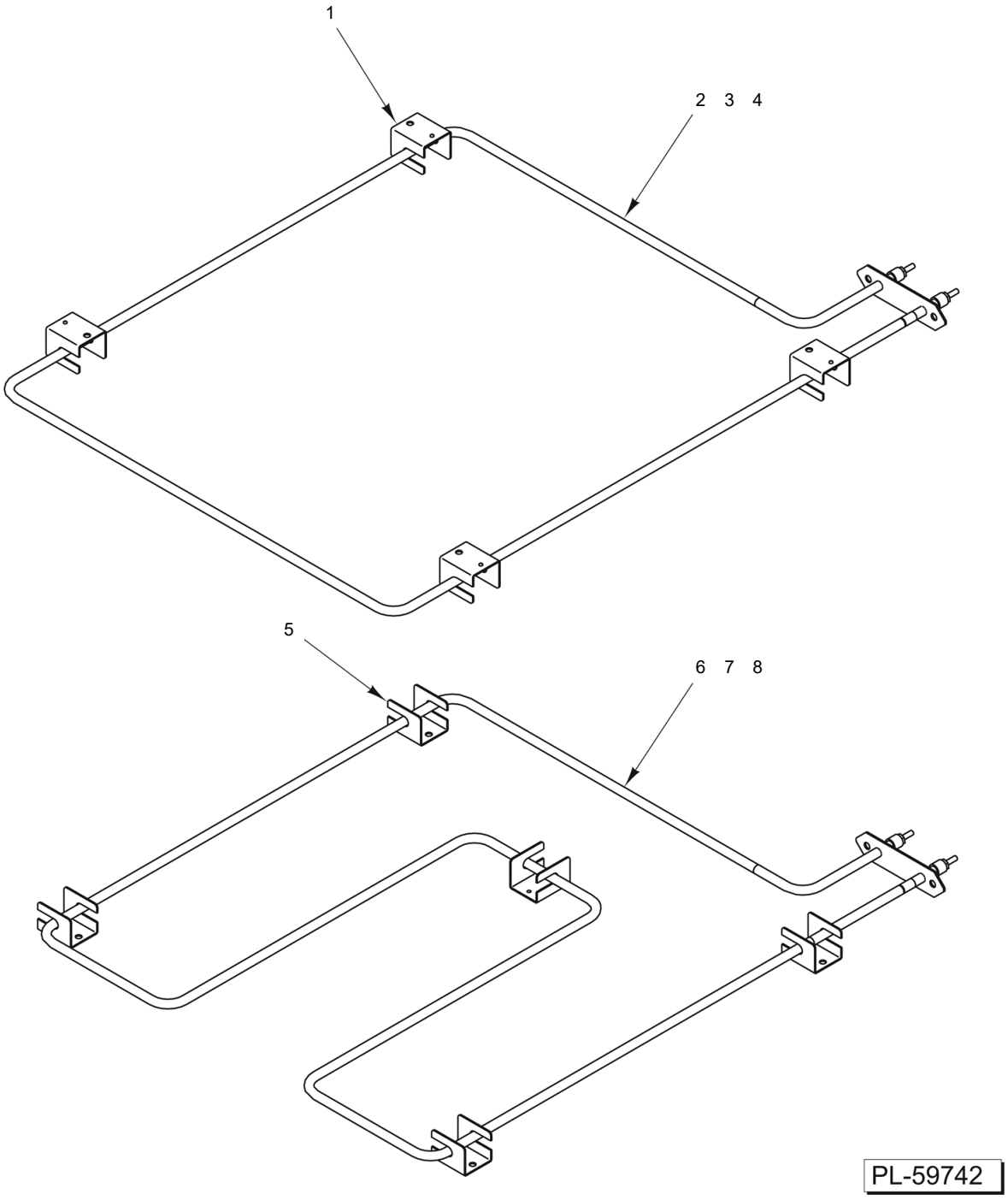

OVEN ELEMENT

OVEN ELEMENT

ILLUS. PL-59742	PART NO.	NAME OF PART	AMT.
1	00-412925-00001	Clamp - Element	AR
2	00-927538-0004S	Oven Element - Upper (208 V.)	AR
3	00-927538-0005S	Oven Element - Upper (240 V.)	AR
4	00-927538-0006S	Oven Element - Upper (480 V.)	AR
5	00-412925-00001	Clamp - Element	AR
6	00-927538-0001S	Oven Element - Lower (208 V.)	AR
7	00-927538-0002S	Oven Element - Lower (240 V.)	AR
8	00-927538-0003S	Oven Element - Lower (480 V.)	AR