MSA SERIES
GAS GRIDDLE INSTALLATION GUIDE

1 VERIFY DATA TAG

Check the equipment data plate on griddle and regulator received with griddle to ensure the correct gas type.

- Know gas type of location and if the gas lines can supply enough volume for the equipment being installed.

ID Plate



Natural Gas 3"-6"



Liquid Propane 5"-12"



2 CHECK GAS PRESSURE

Pressure should be set as follows:

Natural = 5" Water Column
Propane = 10" Water Column

Refer to manual for additional details.

3 ENSURE EQUIPMENT IS LEVEL

The griddle must be level (side-to-side and front-to-back) during operation to ensure proper performance. Improper leveling can result in uneven temperature distribution, cold spots, and possibly damage electrical components.

- Place a level on the griddle.
- Adjust legs by turning the bullet feet at the bottom of each leg. Using pliers or a crescent wrench, turn the feet counter-clockwise to increase height, and clockwise to decrease height until leveling is achieved. Do not extend the legs more than 1¾".

Correct

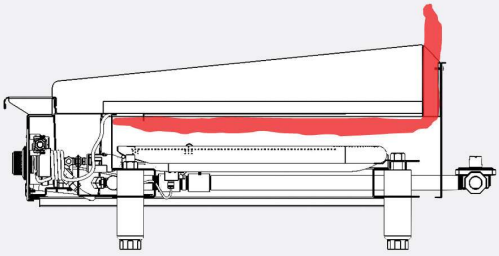

- The unit is level front to back and side to side.
- The hot combustion gases are properly evacuating through the flue.
- Heat is evenly distributed under the cooking surface.

Incorrect

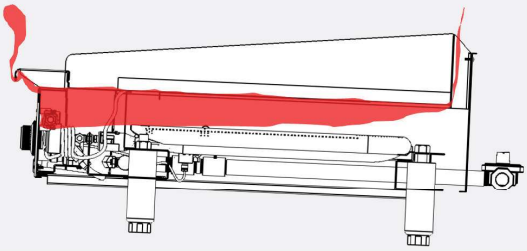

- The unit is unlevel – higher in front.
- The hot combustion gases are gathering in the front of the unit.
- Heat is not evenly distributed under the cooking surface.
- May see the same effect if the unit is level but the flue is clogged.

4 ENSURE FLUE VENT IS CLEAR OF OBSTRUCTIONS

Flue exit must be clear of obstructions for 18". A constricted flue will not allow the hot combustion gases to evacuate as designed and will cause premature failure of control components, plate damage, calibration and pilot issues.

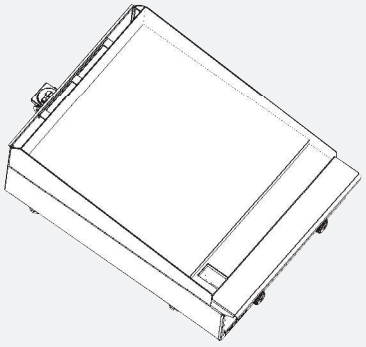

5 LIGHT THE PILOT

Refer to the sticker on the unit for instructions on lighting the pilot.

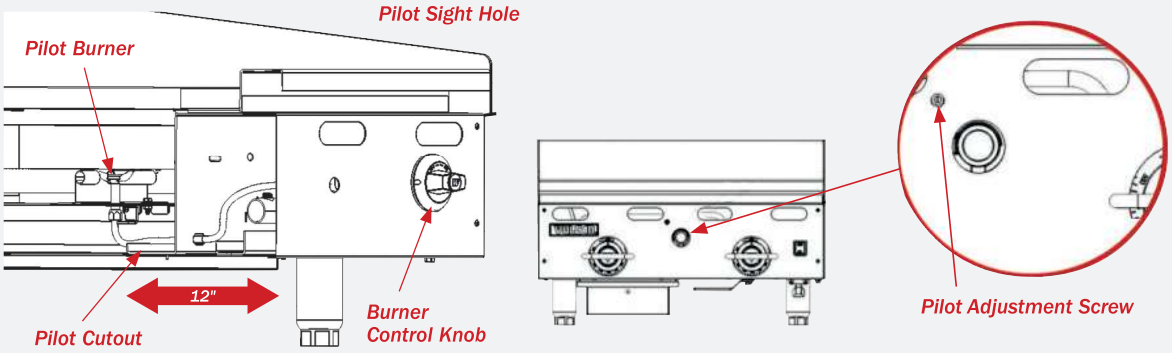

6 GET UNIT READY FOR FIRST USE

Remove all packing material and protective plastic from the surfaces of the unit.

- Before leaving the factory, the griddle is coated with vegetable oil as a rust inhibitor. Remove this film when the griddle plate is being cleaned prior to its first cooking use.
  - Heat the griddle to 200-300°F to loosen and melt the coating, then clean the surface by adding water or a non-corrosive, grease dissolving commercial cleaner, following the manufacturer's directions in the manual.
  - Scrape the oil residue from the plate with a griddle scraper.
  - Rinse thoroughly and wipe dry with a soft clean cloth.
- Clean all accessories.

7 SEASON THE GRIDDLE

Season the griddle to avoid possible surface corrosion before first use and after every cleaning. This will also help reduce the sticking of cooked food product.

- Heat griddle to a low temperature (300-350°F) and apply a small amount of cooking oil – about one ounce per square foot of surface.
- Use a soft lint-free cloth to spread the oil over the entire griddle surface to create a thin film.
- Wipe off any excess oil with a cloth. Repeat the procedure until the griddle has a slick, mirror-like finish.

ADDITIONAL NOTES ON INSTALLING A GRIDDLE

- This griddle must be installed with the legs for air movement and must be installed in accordance to all clearances noted in manual.
- Griddle needs to be installed to meet local, state, NFPA, and National Fuel Gas Codes.
- This model features a standing pilot that must be manually lit with an outside ignition source (such as a lit taper, etc). The pilot is monitored by a thermocouple and pilot safety valve. If the pilot goes out, the safety valve will shut-off the gas supply to the pilot and main burners. There is one pilot and one safety valve for every two burners except on the 36" and 60" models. The 36" and 60" models have an odd number of main burners, therefore one of the sets of pilots and safety valves in these models will control only one main burner. The pilot burners are aligned with the safety valve bush buttons. The pilot burners are inset 12" from the front panel.

Always refer to the procedures as instructed in the Installation & Operation manual for your specific model. Manuals may be found by visiting the Vulcan website and clicking on RESOURCES at the top right of the home page.

Remember that cooking equipment and its parts are hot. Use care when operating, cleaning or performing maintenance.

This product is eligible for a FREE New Equipment Checkout performed by Hobart Service or an authorized Independent Service Technician. Contact a Vulcan Sales Representative for more information.

For additional product resources, please visit **www.vulcanequipment.com**.