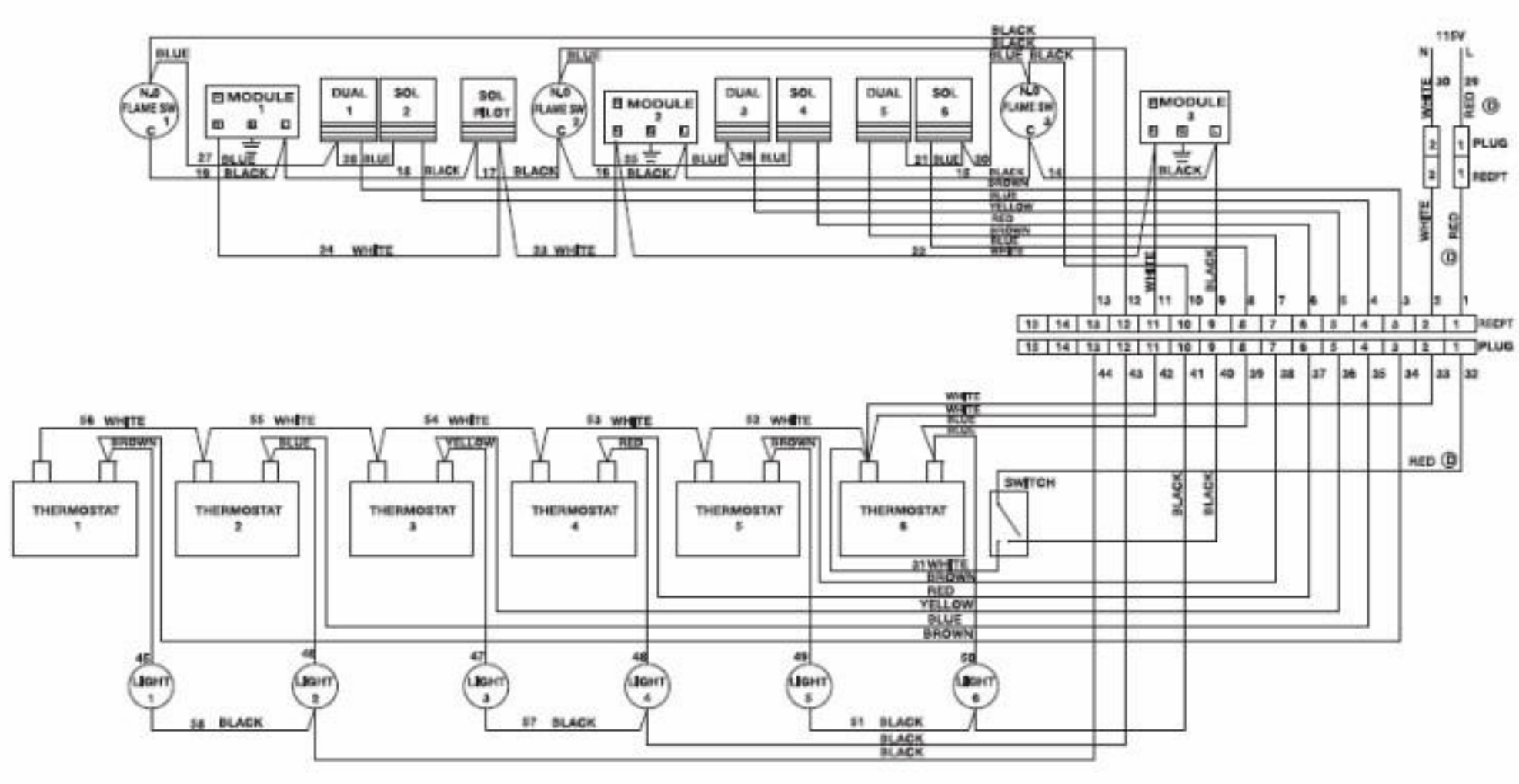
MODULE 1
MODULE 2
MODULE 3
DUAL 1
SOL 2
SOL PILOT
DUAL 3
SOL 4
DUAL 5
SOL 6
FLAME SW 1
FLAME SW 2
FLAME SW 3
115V
PLUG
RECPT
THERMOSTAT 1
THERMOSTAT 2
THERMOSTAT 3
THERMOSTAT 4
THERMOSTAT 5
THERMOSTAT 6
SWITCH
LIGHT 1
LIGHT 2
LIGHT 3
LIGHT 4
LIGHT 5
LIGHT 6

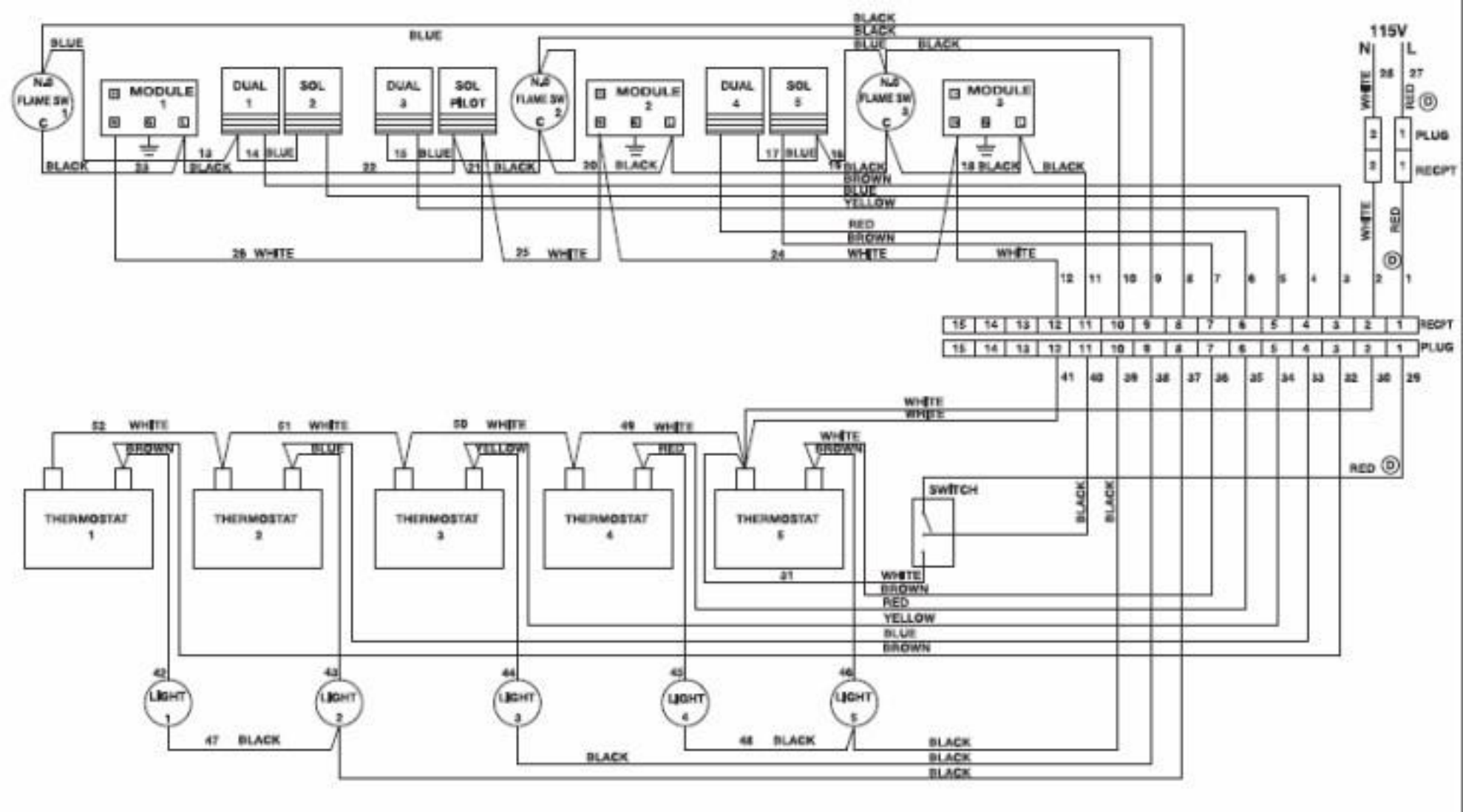
115V
N
L
MODULE 1
MODULE 2
MODULE 3
DUAL 1
SOL 2
DUAL 3
SOL PILOT
DUAL 4
SOL 5
FLAME SW 1
FLAME SW 2
FLAME SW 3
PLUG
RECPT
THERMOSTAT 1
THERMOSTAT 2
THERMOSTAT 3
THERMOSTAT 4
THERMOSTAT 5
SWITCH
LIGHT 1
LIGHT 2
LIGHT 3
LIGHT 4
LIGHT 5
BLUE
BLACK
WHITE
BROWN
RED
YELLOW

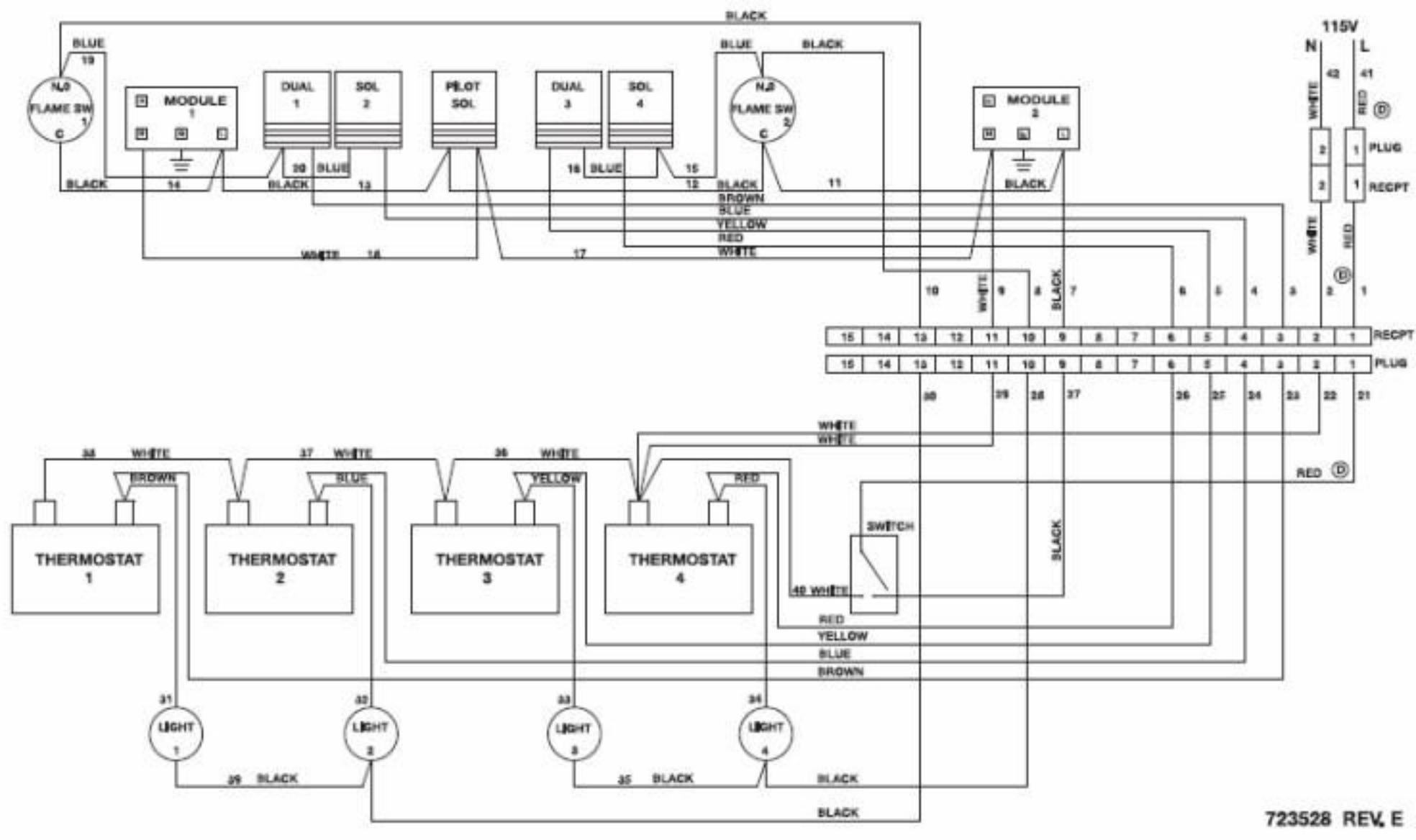
115V
N
L
MODULE 1
MODULE 2
DUAL 1
SOL 2
PILOT SOL
DUAL 3
SOL 4
FLAME SW 1
FLAME SW 2
PLUG
RECPT
THERMOSTAT 1
THERMOSTAT 2
THERMOSTAT 3
THERMOSTAT 4
SWITCH
LIGHT 1
LIGHT 2
LIGHT 3
LIGHT 4
BLACK
BLUE
WHITE
RED
BROWN
YELLOW

723528 REV. E

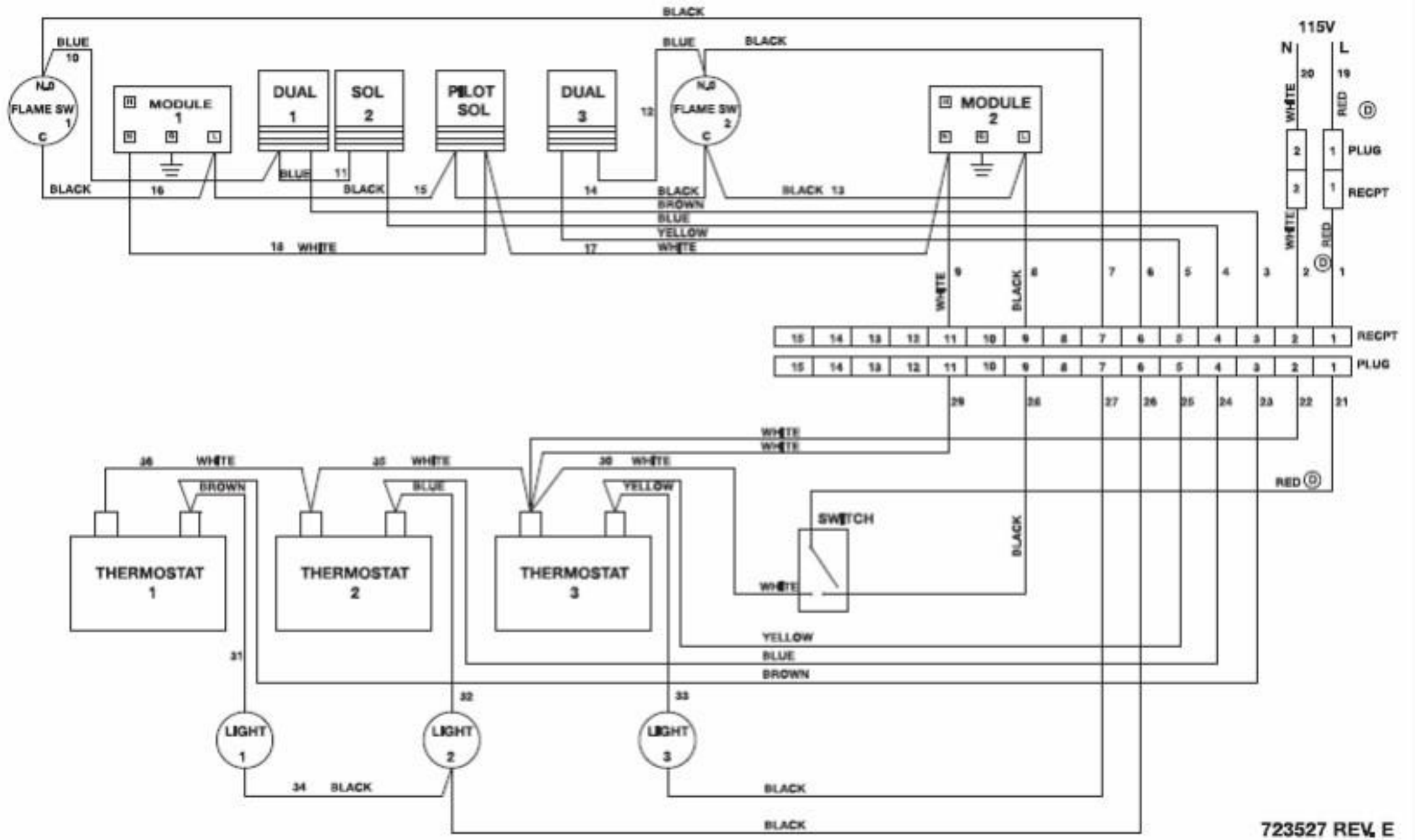
BLACK
BLUE
10
FLAME SW
1
C
MODULE
1
DUAL
1
SOL
2
PILOT
SOL
DUAL
3
12
FLAME SW
2
MODULE
2
115V
N
L
20
19
WHITE
RED
PLUG
RECPT
BLACK
16
BLUE
11
BLACK
15
14
BLACK
BROWN
BLUE
YELLOW
WHITE
BLACK 13
18 WHITE
17
9
8
7
6
5
4
3
2
1
15 14 13 12 11 10 9 8 7 6 5 4 3 2 1
29
26
27
28
25
24
23
22
21
36 WHITE
BROWN
35 WHITE
BLUE
30 WHITE
YELLOW
THERMOSTAT
1
THERMOSTAT
2
THERMOSTAT
3
SWITCH
31
32
33
LIGHT
1
LIGHT
2
LIGHT
3
34 BLACK
723527 REV. E

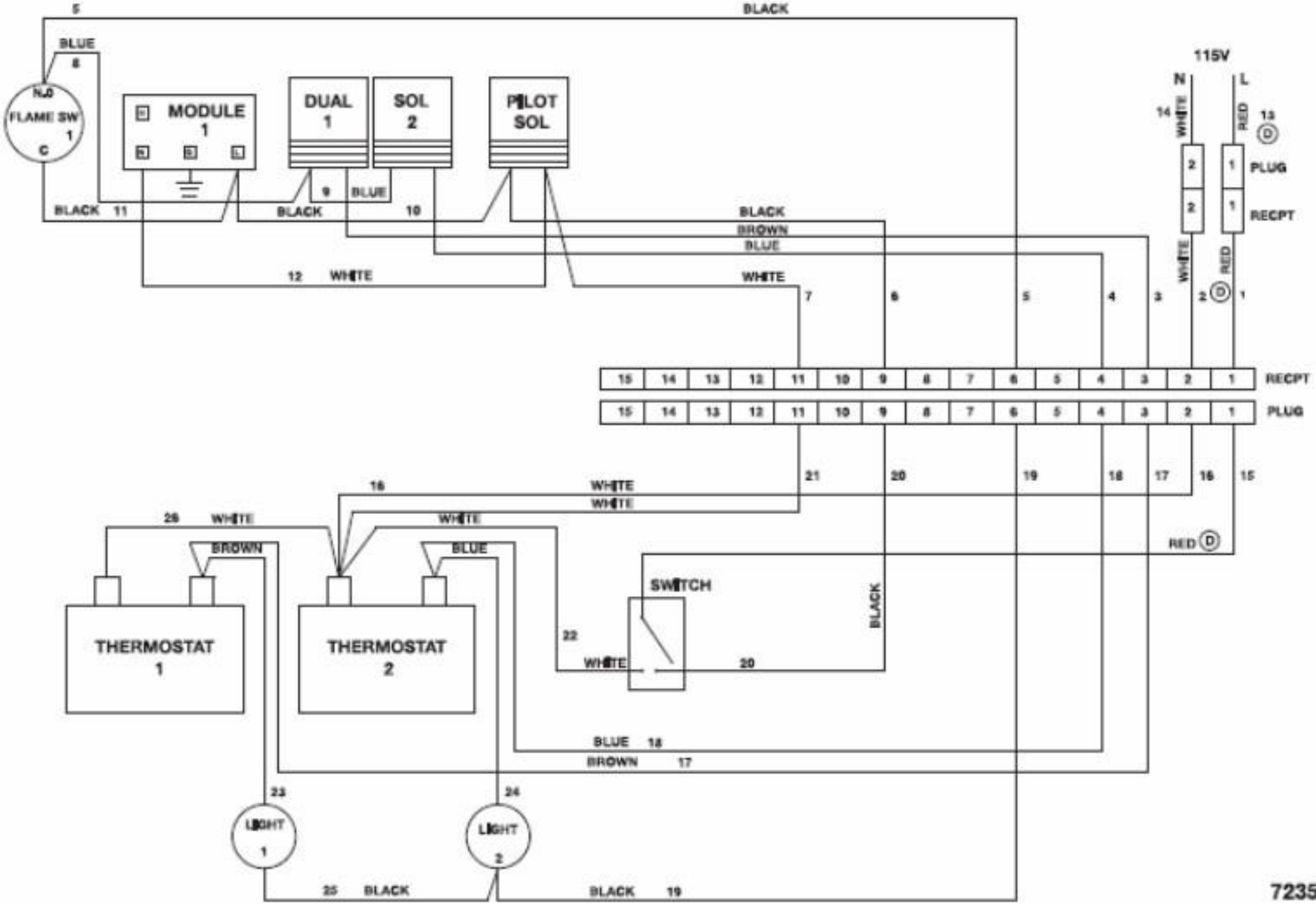
5
BLACK
BLUE
8
N.O
FLAME SW
1
C
MODULE
1
DUAL
1
SOL
2
PILOT
SOL
115V
N
L
14
WHITE
RED
13
PLUG
RECPT
9
BLUE
BLACK
11
BLACK
10
BLACK
BROWN
BLUE
12
WHITE
WHITE
7
6
5
4
3
2
1
RECPT
PLUG
21
20
19
18
17
16
15
16
WHITE
WHITE
26
WHITE
WHITE
BROWN
BLUE
RED
SWITCH
BLACK
THERMOSTAT
1
THERMOSTAT
2
22
WHITE
20
BLUE
18
BROWN
17
23
24
LIGHT
1
LIGHT
2
25
BLACK
BLACK
19
7235