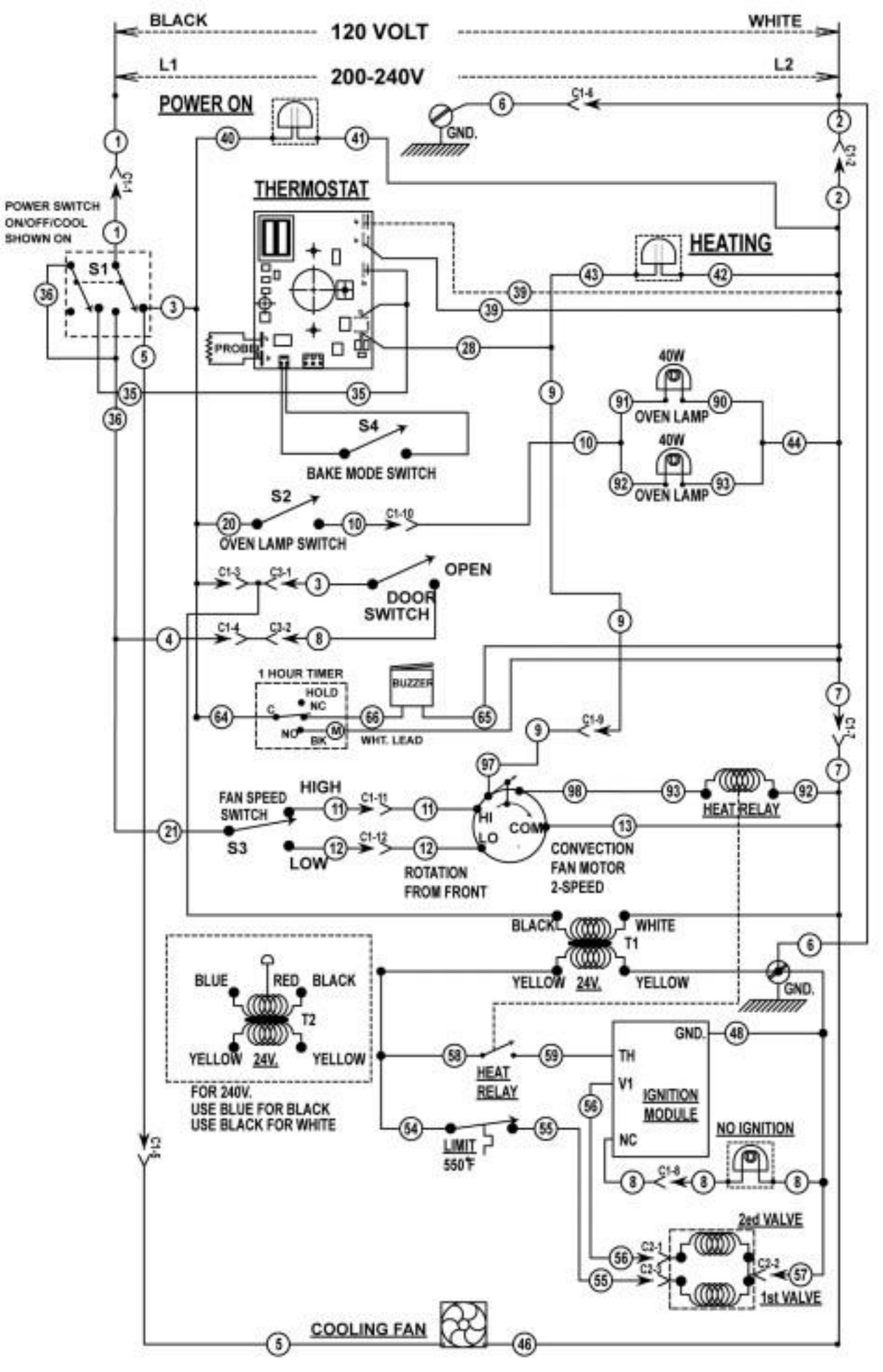
BLACK
120 VOLT
WHITE
L1
200-240V
L2
POWER ON
GND.
THERMOSTAT
POWER SWITCH
ON/OFF/COOL
SHOWN ON
S1
HEATING
PROBE
40W
OVEN LAMP
S4
BAKE MODE SWITCH
S2
OVEN LAMP SWITCH
OPEN
DOOR
SWITCH
1 HOUR TIMER
HOLD
NC
NO
BK
BUZZER
WHT. LEAD
FAN SPEED
SWITCH
HIGH
LOW
S3
HI
LO
COM
ROTATION
FROM FRONT
CONVECTION
FAN MOTOR
2-SPEED
HEAT RELAY
BLACK
WHITE
T1
YELLOW
24V.
YELLOW
BLUE
RED
BLACK
T2
YELLOW
24V.
YELLOW
FOR 240V.
USE BLUE FOR BLACK
USE BLACK FOR WHITE
HEAT
RELAY
TH
V1
NC
GND.
IGNITION
MODULE
NO IGNITION
LIMIT
550°F
2nd VALVE
1st VALVE
COOLING FAN