CATALOG OF REPLACEMENT PARTS

GAS CONVECTION STEAMERS

MODELS

VSX5G	*ML-114946*
VSX5GC	*ML-114947*
VSX7GC	*ML-114948*
VSX10GC	*ML-114949*



For additional information on Vulcan-Hart or to locate an authorized parts and service provider in your area, visit our website at www.vulcanhart.com

VULCAN-HART
DIVISION OF ITW FOOD EQUIPMENT GROUP, LLC
P.O. BOX 696, LOUISVILLE, KY 40201-0696
TEL. (800) 814-2028
WWW.VULCANHART.COM

FORM 35442 Rev. A (10-06)

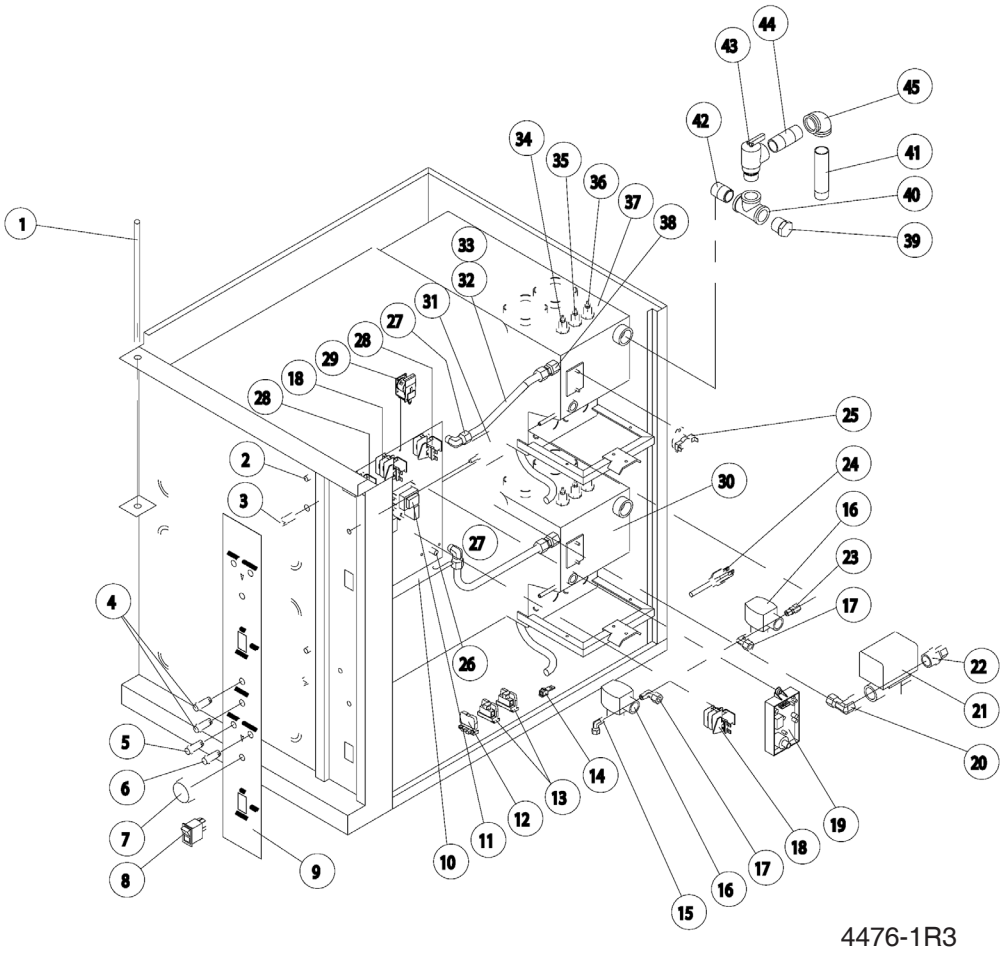

ILLUS. PL- 4476-1R3	PART NO.	NAME OF PART	AMOUNT VSX5G	VSX7G	VSX10G
1	00-851004	Hinge Rod	1		
	00-851815	Hinge Rod		1	
	00-851816	Hinge Rod			1
2	00-842049	Door Switch	1	1	2
	00-850077	Switch Actuator	1	2	2
3	00-840496	Striker	1	2	2
	00-844533	Washer	1	2	2
	00-850075	Lock Washer	1	2	2
	00-850076	Hex Nut	1	2	2
	00-851410	Washer	1	2	2
4	00-840507	Pilot Light - Green (120V)	1	2	2
5	00-851072	Pilot Light - Green (28V)	1	2	2
6	00-844367-00055	Pilot Light - Red	1	2	2
7	00-843781-00003	Dial - 60 Minutes	1	2	2
	00-844032-00001	Dial - 120 Minutes	1	2	2
8	00-855456	Power Switch	1	2	2
9	00-855139	Control Decal	1		
	00-855140	Control Decal		1	
	00-855141	Control Decal			1
10	00-851050	Componet Mounting Board	1	2	2
11	00-852984	Level Control 10K OHM	1	2	2
12	00-843969	End Section	1	1	1
13	00-840511	Terminal Block	2	2	2
14	00-844367-00008	Ground Lug	1	1	1
15	00-850010	Elbow 1/4 C x 1/8 MPT	1	2	2

© Vulcan-Hart, A Division of ITW Food Equipment Group, LLC

ILLUS. PL- 4476-1R3	PART NO.	NAME OF PART	AMOUNT VSX5G	VSX7G	VSX10G
16	00-853339	Solenoid Valve	2	4	4
17	00-851563	Elbow 3/8 C c 1/8 MPT	2	4	4
18	00-851071	Relay 120 V	1	2	2
19	00-853486	Ignition Module, Direct Spark	1	2	2
	00-851540	Ignition Module, Glow Coil	1	2	2
20	00-850013	Elbow 1/2 C x 3/4 MPT	1	2	2
21	00-836931	Blowdown Solenoid	1	2	2
22	00-854333	Connector 5/8 C x 3/4 MPT	1	2	2
23	FP-078-49	Connector 1/4 C x 1/8 MPT	1	2	2
24	00-851389	Power Cord Set 115V	1	1	1
25	00-853105	Hi Limit Sensor	1	2	2
26	00-881973	Thermostat Operating	1	2	2
27	00-853927	Elbow 1/2 C x 1/4 MPT	2	4	4
28	00-843947	Relay 120V	2	4	4
29	00-851062	Buzzer	1	2	2
30	00-855098	Generator Tank		1	1
31	00-411690-00001	Timer, 60 Minutes	1	2	2
	00-411690-00007	Timer, 120 Minutes	1	2	2
32	00-853925	Right Hand Steam Jet Tube	1		2
	00-853969	Right Hand Steam Jet Tube Bottom		1	
	00-853968	Steam Jet Tube - Right Hand & Left Hand Top		2	
33	00-853926	Left Hand Steam Test Tube	1		2
	00-854059	Left Hand Steam Test Tube Bottom		1	
34	00-851068	Probe - Low Level Cut Off	1	2	2
35	00-851067	Probe - Low Level	1	2	2
36	00-851066	Probe - High Level	1	2	2
37	00-855097	Generator Tank - Top	1	1	1
38	00-850011	Union Connector 1/2 C	1	2	2
39	00-855142	Plug 3/4	1	2	2
40	00-855143	Tee 3/4	1	2	2
41	00-855144	Down Tube	1	2	2
42	00-855145	Close Nipple 3/4	1	2	2
43	00-854470	Relief Valve 5 psi	1	2	2
44	00-855146	Nipple 3/4 x 2 1/2	1	2	2
45	00-855147	Elbow 3/4	1	2	2
*46	00-851254	Steam Diverter	2	4	4
*47	00-844401	Thermostat Fitting 3/8 C x 3/8 MPT	1	2	2
*48	00-850015	Water Connection 3/8 C	2	2	2
*49	00-850012	Elbow - 1/2 C Tank Left Hand	1	2	2
*50	00-840499	Pan Rack - 3 Pan		2	
	00-843859	Pan Rack - 4 Pan		2	
	00-843860	Pan Rack - 5 Pan	2		4
*51	00-840495	Perforated Door Trough	1	1	1
*52	00-851073	Right Hand Side Panel	1		
	00-851074	Right Hand Side Panel		1	
	00-851075	Right Hand Side Panel			1
*53	00-855148	Left Hand Side Panel	1		
	00-855149	Left Hand Side Panel		1	
	00-855150	Left Hand Side Panel			1
*54	00-851805	Top Cover	1	1	1
*55	00-855151	Flue Assembly		1	1
	00-855152	Flue Assembly	1		
*56	00-853966	Right Hand Side Riser	1	1	1
*57	00-853965	Left Hand Side Riser	1	1	1
*58	00-853964	Front Side Riser	1	1	1
*59	00-853963	Rear Side Riser	1		
*60	00-853962	Rear Side Riser		1	1
*61	00-853957	Fuse Holder	1	2	2
*62	00-853974	Fuse 2A 250 V (120 V only)	1	2	2
	00-851929	Fuse 1A 250 V (220 V only)	1	2	2
*63	00-855153	Wire Harness	1	2	2
*64	00-844367-00056	Transformer, Glow Coil	1	2	2
*65	00-854051	Wire Harness (DSI Ignition Board to Relay)	1	2	2
	00-844367-00060	Wire Harness (Glow Coil Ignition Module)	1	2	2

* NOT SHOWN
** SELECT AS REQUIRED

DOOR ASSEMBLY

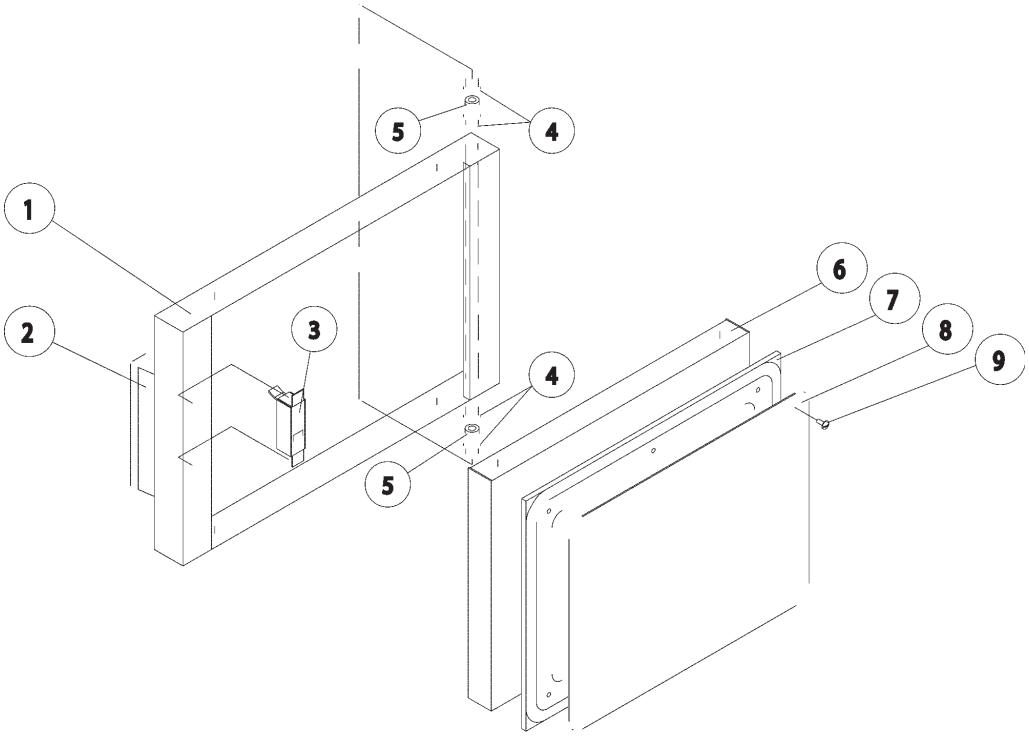

ILLUS. PL-4476-2R1	PART NO.	NAME OF PART	AMOUNT VSX5G	VSX7G	VSX10G
1	00-845586	Door Frame	1		2
	00-845585	Door Frame, Bottom	1		
	00-844192	Door Frame, Top	1		
2	00-844193	Door Handle Assembly	1	2	2
	00-850193	Door Handle Decal	1	2	2
3	00-844194	Latch Assembly	1	2	2
4	00-840479	Bushing	4	8	8
5	00-850447	Spacer	2	4	4
6	00-850658	Door Panel	1		2
	00-845587	Door Panel, Bottom	1		
	00-844195	Door Panel, Top	1		
7	00-844385	Door Gasket, 5 Pan	1		2
	00-844384	Door Gasket, Bottom 4 Pan	1		
	00-844196	Door Gasket, Top 3 Pan	1		
8	00-851418	Gasket Plate, 5 Pan	1		2
	00-851417	Gasket Plate, Bottom 4 Pan	1		
	00-851224	Gasket Plate, Top 3 Pan	1		
9	00-844453	Gasket Panel Screws, 10 - 32 x 1/2 SST	8	14	16
10	00-845584	Door Assembly, 5 Pan	1		2
	00-845583	Door Assembly, Bottom 4 Pan	1		
	00-844191	Door Assembly, Top 3 Pan	1		

BURNER PARTS - NATURAL GAS ONLY, DIRECT SPARK
NATURAL OR PROPANE, GLOW COIL

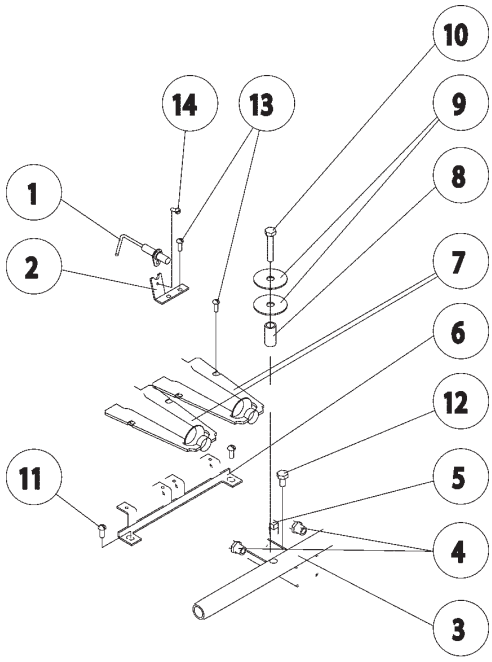

ILLUS. PL-4476-2R1	PART NO.	NAME OF PART	AMOUNT VSX5G	VSX7G	VSX10G
1	00-853487	Spark Electrode, Direct Spark	1	2	2
	00-844367-00066	Sensor Frame, Glow Coil	1	2	2
2	00-853970	Spark Electrode Bracket	1	2	2
	00-851059	Sensor Bracket, Glow Coil	1	2	2
3	00-855154	Gas Manifold Assembly	1	2	2
4	00-851053	Orifice #43	2	4	4
5	00-854334	Plug 1/8 NPT	1	2	2
6	00-851057	Burner Mounting Bracket	1	2	2
7	00-851058	Burner	2	4	4
8	00-853967	Burner Support	1	2	2
9	00-854335	Finer Washer 1/4	2	4	4
10	00-854336	Hex Cap Screw 1/4 - 20 x 1 1/2	1	2	2
11	00-855155	Machine Screw 10 - 32 x 3/8	2	4	4
12	00-855156	Machine Screw 1/4 - 20 x 1/4	1	2	2
	00-855157	Lock Washer 1/4	1	2	2
13	00-855158	Machine Screw 8 - 32 x 3/8	4	8	8
14	00-855159	Machine Screw 6 - 32 x 3/8	1	2	2
*15	00-851060	Coil, Glow	1	2	2

BURNER PARTS - PROPANE GAS ONLY

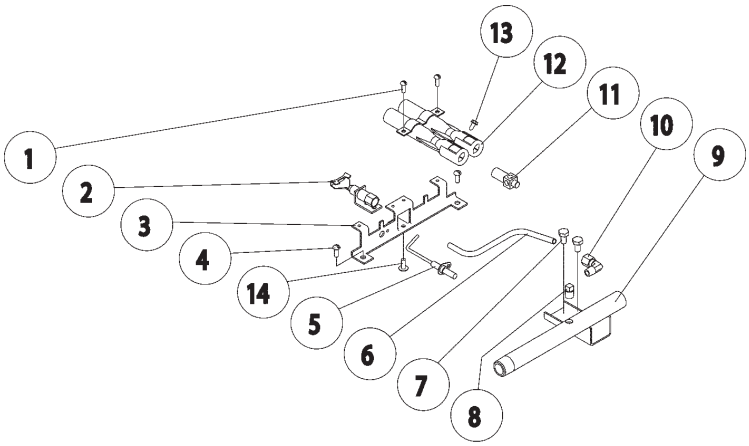

ILLUS. PL-4476-2R1	PART NO.	NAME OF PART	AMOUNT VSX5G	VSX7G	VSX10G
1	00-855160	Hex Screw 10 - 32 x 1/4	4	8	8
2	00-854847	Pilot Burner	1	2	2
3	00-854848	Burner Mounting Bracket	1	2	2
4	00-855161	Machine Screw	2	4	4
5	00-854849	Spark Electrode	1	2	2
6	00-854848	Pilot Tube	1	2	2
7	00-855156	Machine Screw 1/4 - 20 x 1/2	2	4	4
8	00-854334	Plug 1/8 NPT	1	2	2
9	00-854844	Gas Manifold Assembly	1	2	2
10	00-850010	Elbow 1/4 C X 1/8 MPT	1	2	2
11	00-854852	Orifice #63	4	8	8
12	00-854846	Twin Burners	2	4	4
13	00-855162	Sheet Metal Screw	4	8	8
14	00-855163	Machine Screw	2	4	4

VSX5G BURNER SYSTEM

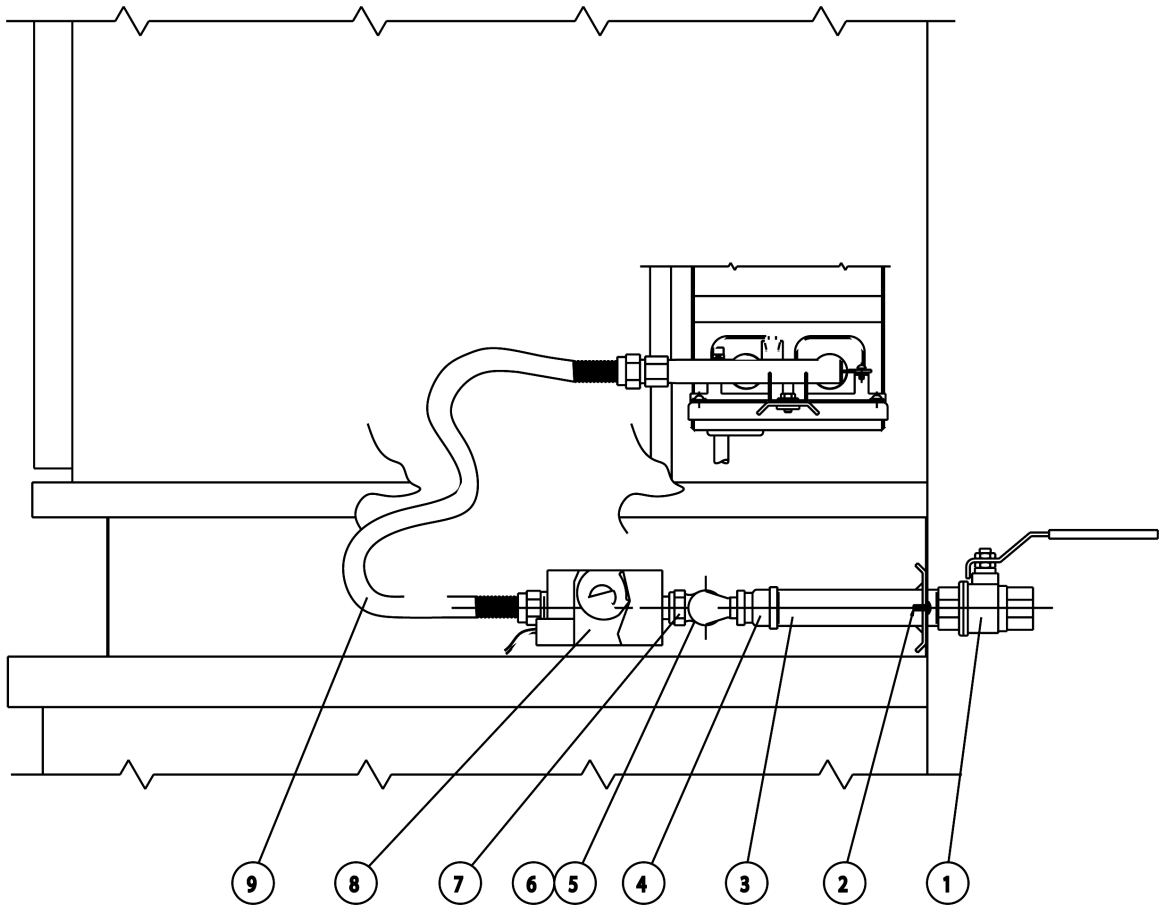

5196AR0

ILLUS. PL- 5196AR1	PART NO.	NAME OF PART	AMOUNT VSX5G
1	00-840522	Ball Valve 3/4"	1
2	00-854337	Screw, #10 - 32 x 12	2
3	00-854338	Gas Supply Pipe Assembly	1
4	00-851526	Reducing Coupling	1
5	00-854339	90 Degree Street Elbow	1
6	00-851782	Close Nipple 1/2"	1
7	00-842904	Union Elbow 1/2"	1
**8	00-853401-00001	Combination Gas Control - Natural	1
	00-853401-00002	Combination Gas Control - Propane	1
9	00-853976	Flex Tube, 1/2" x 18	1

** Select As Required

VSX7G & VSX10G BURNER SYSTEM

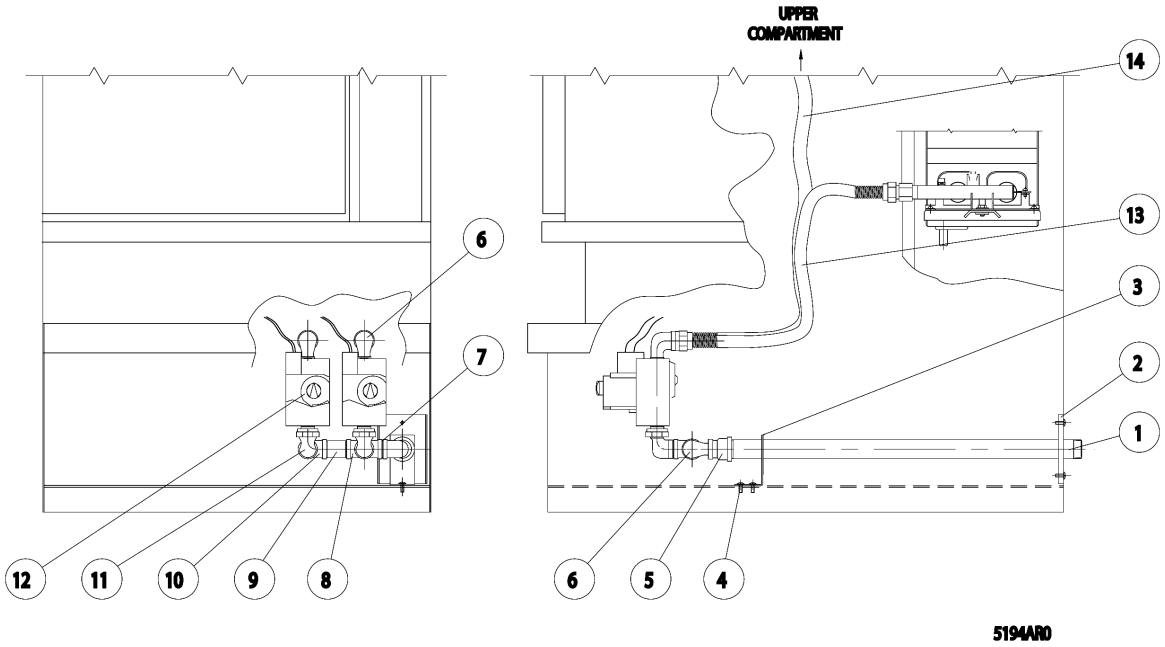

ILLUS. PL- 5194AR0	PART NO.	NAME OF PART	AMOUNT VSX7G	AMOUNT VSX10G
1	00-854340	Gas Supply Pipe Assembly	1	1
2	00-854337	Screw, #10 - 32 x 2	2	2
3	00-855164	Bracket	1	
	00-854342	Bracket, VSX7G		1
4	00-854343	Screw, 1/4" - 20 x 2	2	2
5	00-851526	Reducing Coupling 3/4" x 1/2"	1	1
6	00-854339	90 Degree Street Elbow, 1/2"	3	3
7	00-851782	Close Nipple, 1/2"	3	3
8	00-854344	Tee, 1/2" x 1/2" x 1/2"	1	1
9	00-854345	Nipple, 1/2 x 2	1	1
10	00-854346	90 Degree Elbow, 1/2"	1	1
11	00-842904	Union Elbow, 1/2"	2	2
**12	00-853401-00001	Combination Gas Control - Natural	2	2
	00-853401-00002	Combination Gas Control - Propane	2	2
13	00-853484	Flex Tube, 1/2" x 36"	1	1
14	00-853485	Flex Tube, 1/2" x 48"	1	1

** Select As Required

VSX5G GLOW COIL IGNITION BURNER SYSTEM

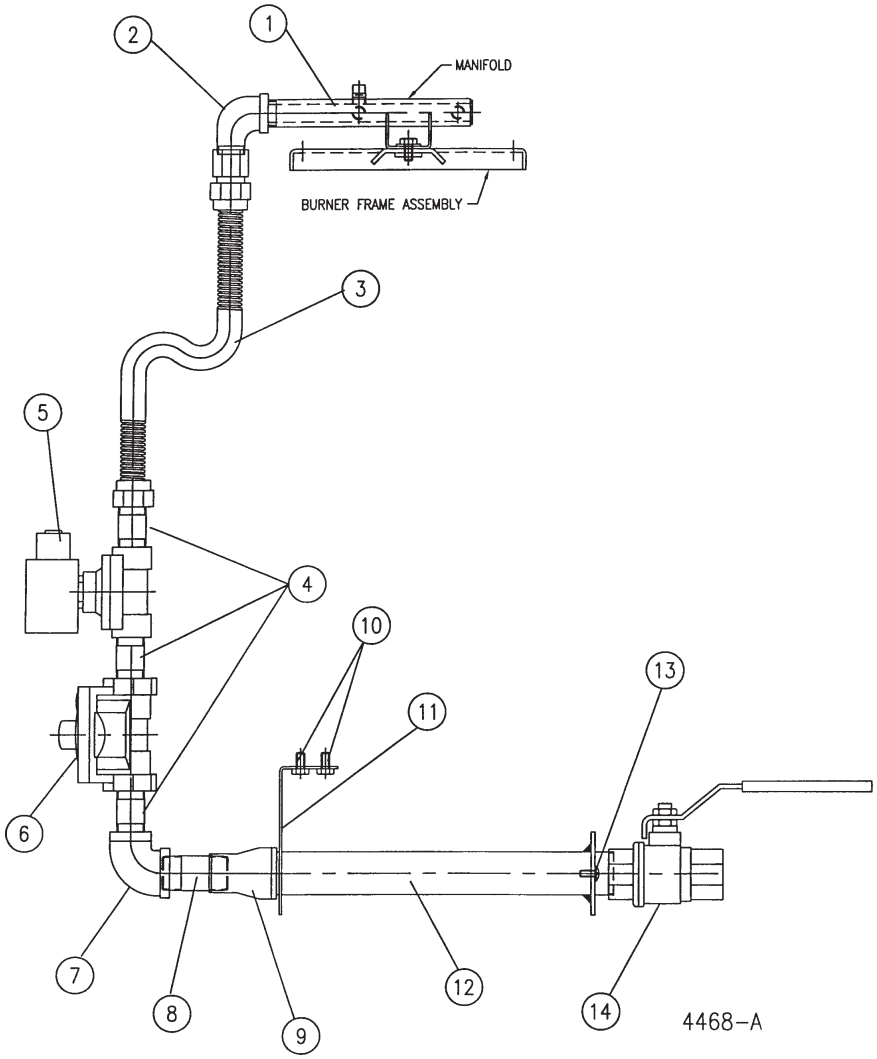

ILLUS. PL- 4468-A	PART NO.	NAME OF PART	AMOUNT VSX5G
1	00-851052	Manifold	1
2	00-854339	St. Elbow	1
3	00-850152	Gas Flex Hose	1
4	00-851782	Close Nipple 1/2	3
5	00-844367-00049	Solenoid Valve	1
**6	00-844367-00047	Gas Pressure Regulator - Natural	1
	00-844367-00048	Gas Pressure Regulator - Propane	1
7	00-854346	Elbow 1/2	1
8	00-854345	Nipple 1/2 x 2	1
9	00-851526	Red Coupling 1/2 x 3/4	1
10	00-854343	Screw 1/4-20 x 1/2	2
11	00-855165	Bracket	1
12	00-855166	Supply Pipe Assembly	1
13	00-854337	Screw 10-32 x 1/2	2
14	00-840522	Ball Value 3/4"	1

** Select As Required

VSX7G & VSX10G GLOW COIL IGNITION BURNER SYSTEM

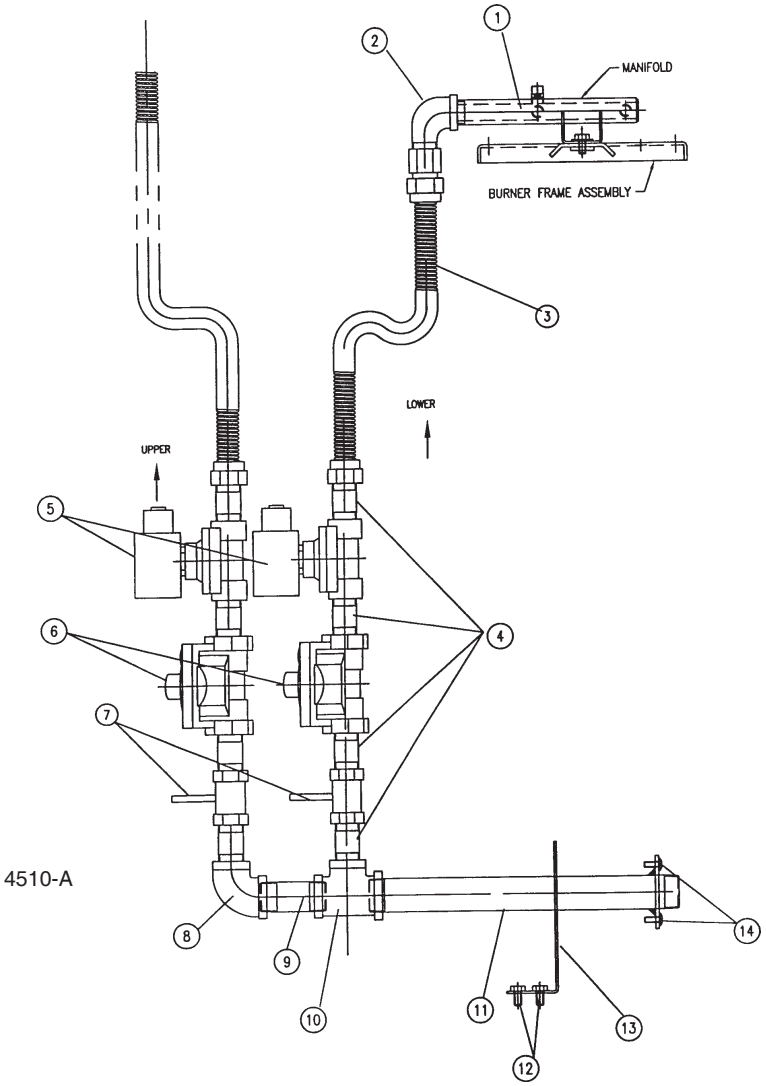

4510-A

ILLUS. PL- 4510-A	PART NO.	NAME OF PART	AMOUNT VSX7G	AMOUNT VSX10G
1	851052	Manifold	2	2
2	854339	St. Elbow	2	2
3	850152	Gas Flex Hose	2	2
4	851782	Close Nipple 1/2	8	8
5	844367-49	Solenoid Valve	2	2
*6	844367-47	Gas Pressure Regulator - Natural	2	2
	844367-48	Gas Pressure Regulator - Propane	2	2
7	844367-59	Gas Shut Off Valve 1/2	2	2
8	854346	Elbow	1	1
9	854345	Nipple 1/2 x 2	1	1
10	855167	Tee	1	1
11	855166	Supply Pipe Assembly	1	1
12	854343	Screw 1/4-20 x 1/2	2	2
13	854342	Bracket	1	1
14	854337	Screw 10-32 x 1/2	2	2

** Select As Required

RECOMMENDED SPARE PARTS
VSX5, VSX7, VSX10 GAS UNITS
STARTING WITH AP IN SERIAL NUMBER

PART NO.	NAME OF PART	AMT.
00-853487	Natural Spark Electrode	2
00-854847	L.P. Pilot Assy.	2
00-853401-00001	Honeywell Nat. Vavle	2
00-853401-00002	Honeywell L.P. Valve	2
00-855456	Power Switch	2
00-842049	Door Switch	2
00-411690-00001	Timer 60 Minute	2
00-853486	Ignition Module Direct Spark	2
00-836931	Auto Blowdown Solenoid	2
00-853339	Compartment Solenoid Valve	2
00-843947	Relay	2
00-854470	Pop Off Valve 5 Lb.	2