WIRE DIAGRAM, CT2B(H) WITH TOGGLE SWITCH

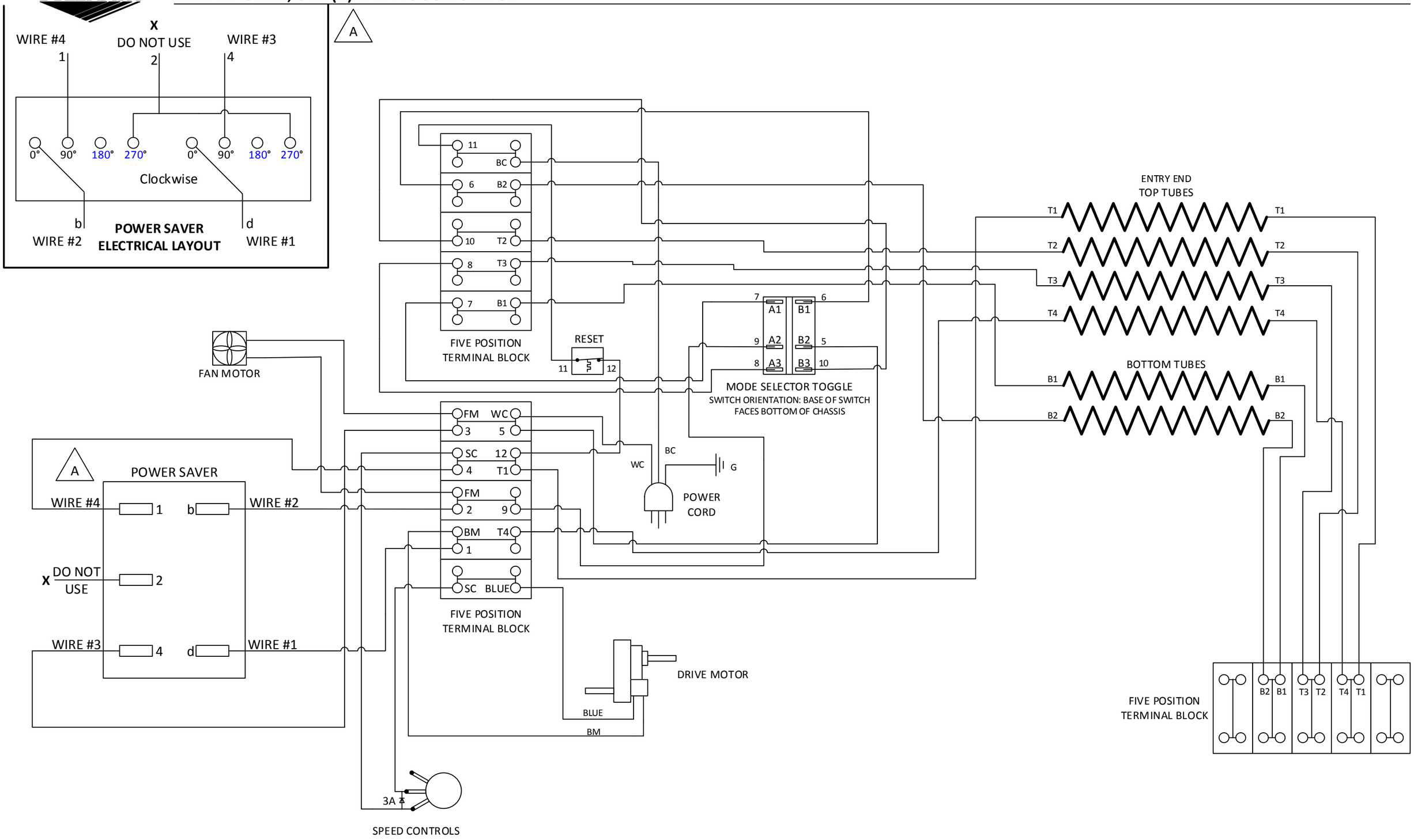

©2018