WIRE DIAGRAM, CT4BH FAMILY

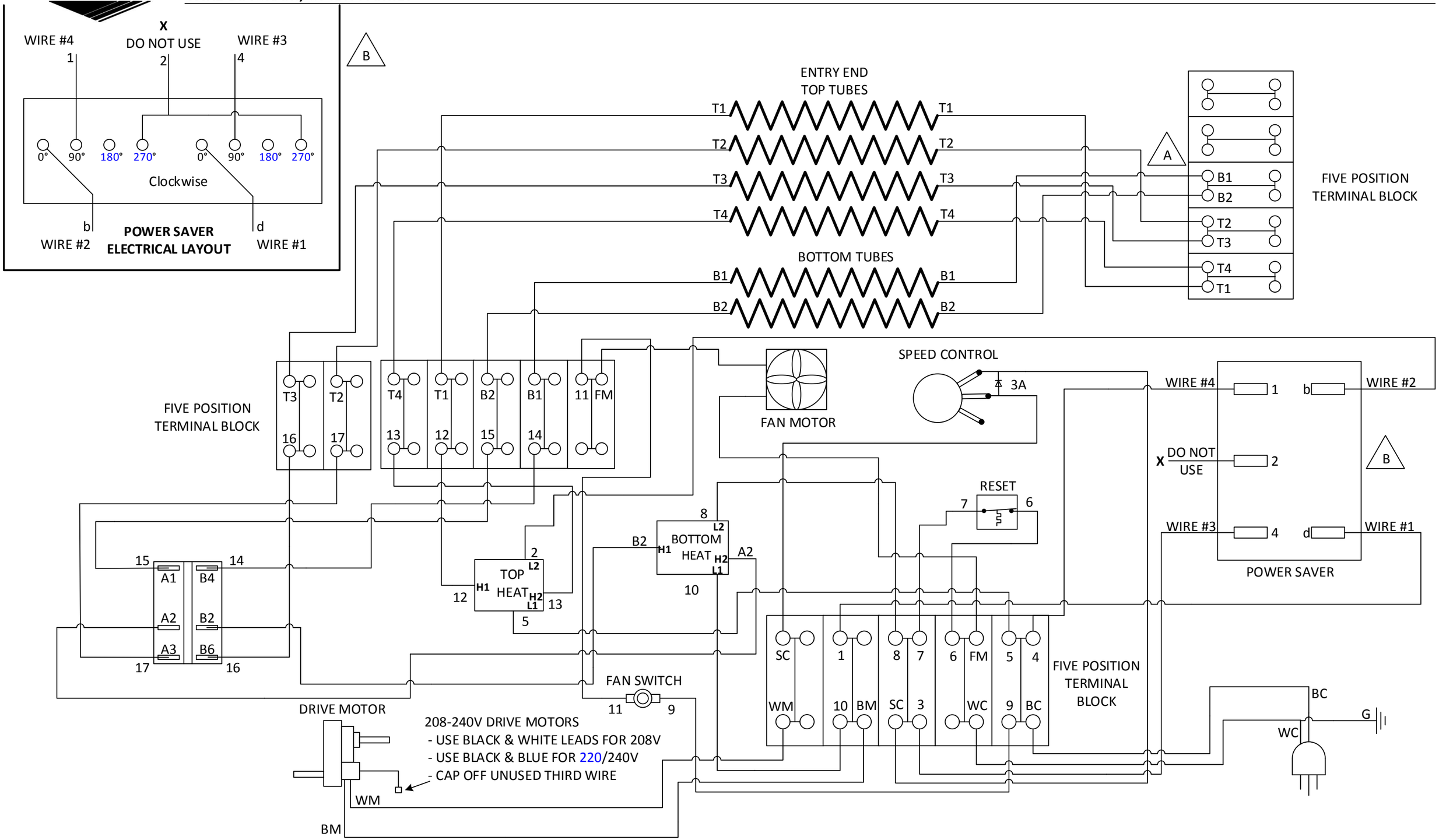

©2018 Document No. WD030 Rev C