WIRE DIAGRAM, CT4 FAMILIES

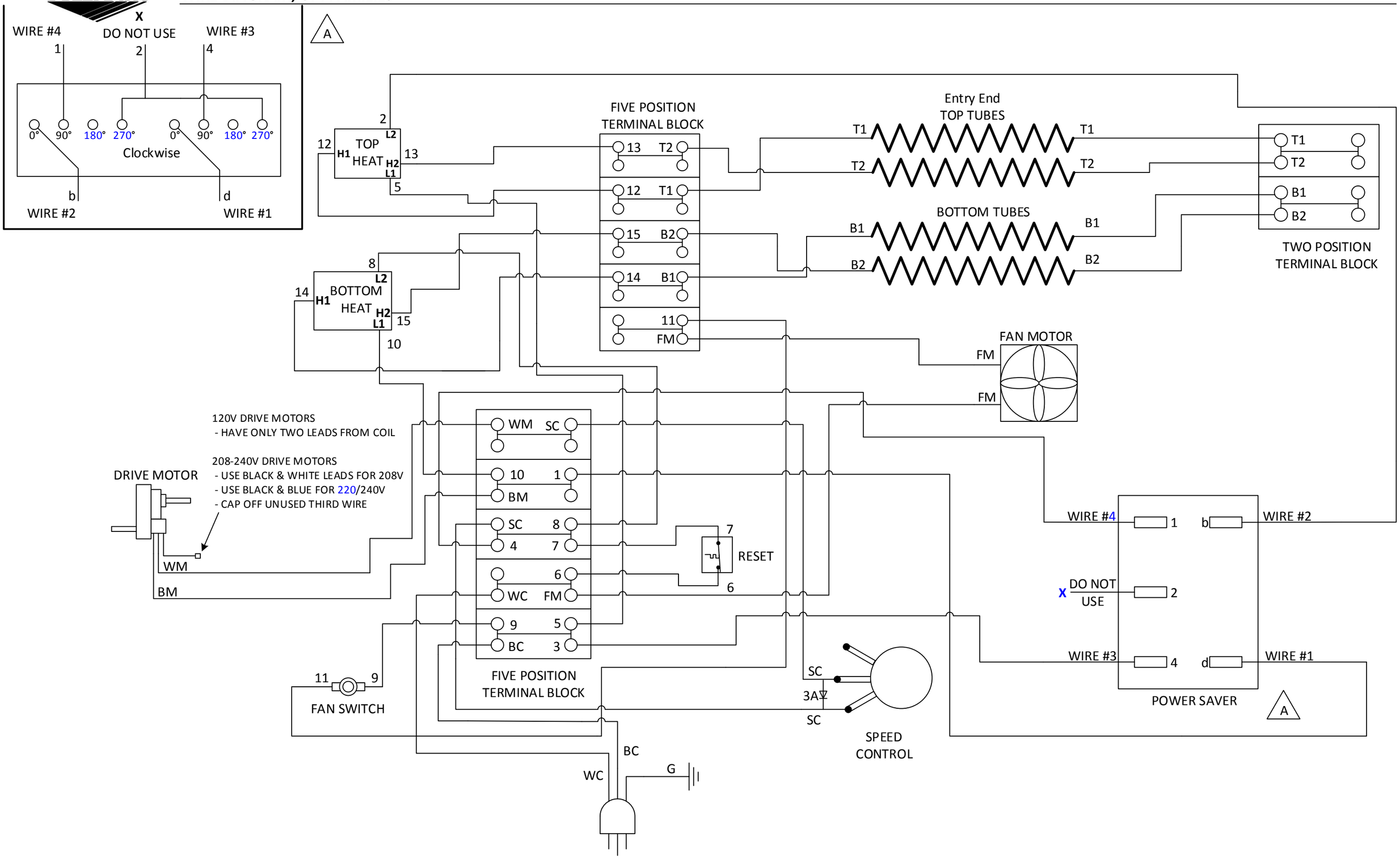

©2018 Document No. WD005 Rev B