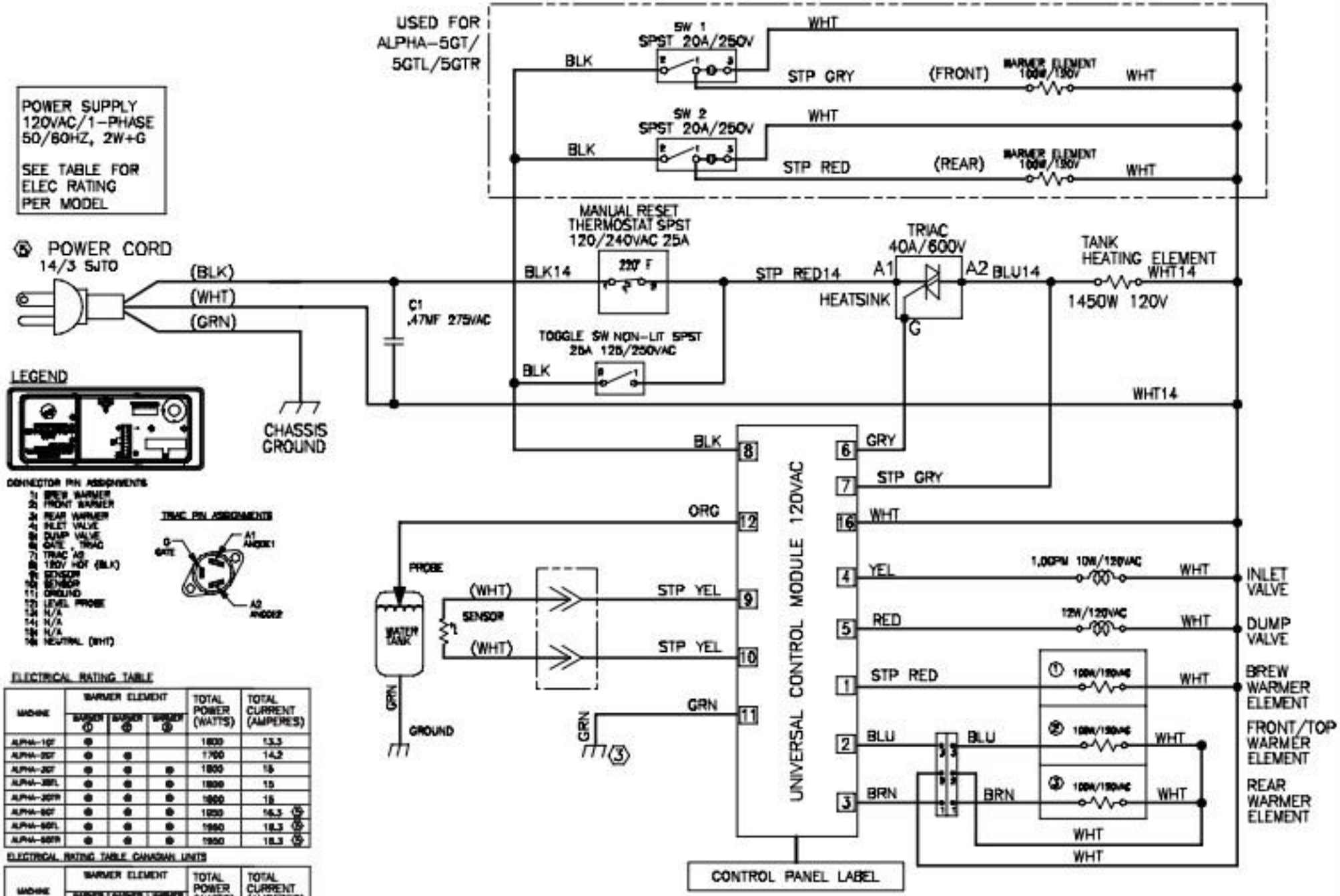

ELECTRICAL RATING TABLE

MACHINE	WARMER ELEMENT WARMER ①	WARMER ②	WARMER ③	TOTAL POWER (WATTS)	TOTAL CURRENT (AMPERES)
ALPHA-10T	●			1600	13.3
ALPHA-20T	●	●		1700	14.2
ALPHA-30T	●	●	●	1800	15
ALPHA-30TL	●	●	●	1800	15
ALPHA-30TR	●	●	●	1800	15
ALPHA-50T	●	●	●	1950	16.3 ④
ALPHA-50TL	●	●	●	1950	16.3 ④
ALPHA-50TR	●	●	●	1950	16.3 ④

ELECTRICAL RATING TABLE CANADIAN UNITS

MACHINE	WARMER ELEMENT WARMER ①	WARMER ②	WARMER ③	TOTAL POWER (WATTS)	TOTAL CURRENT (AMPERES)