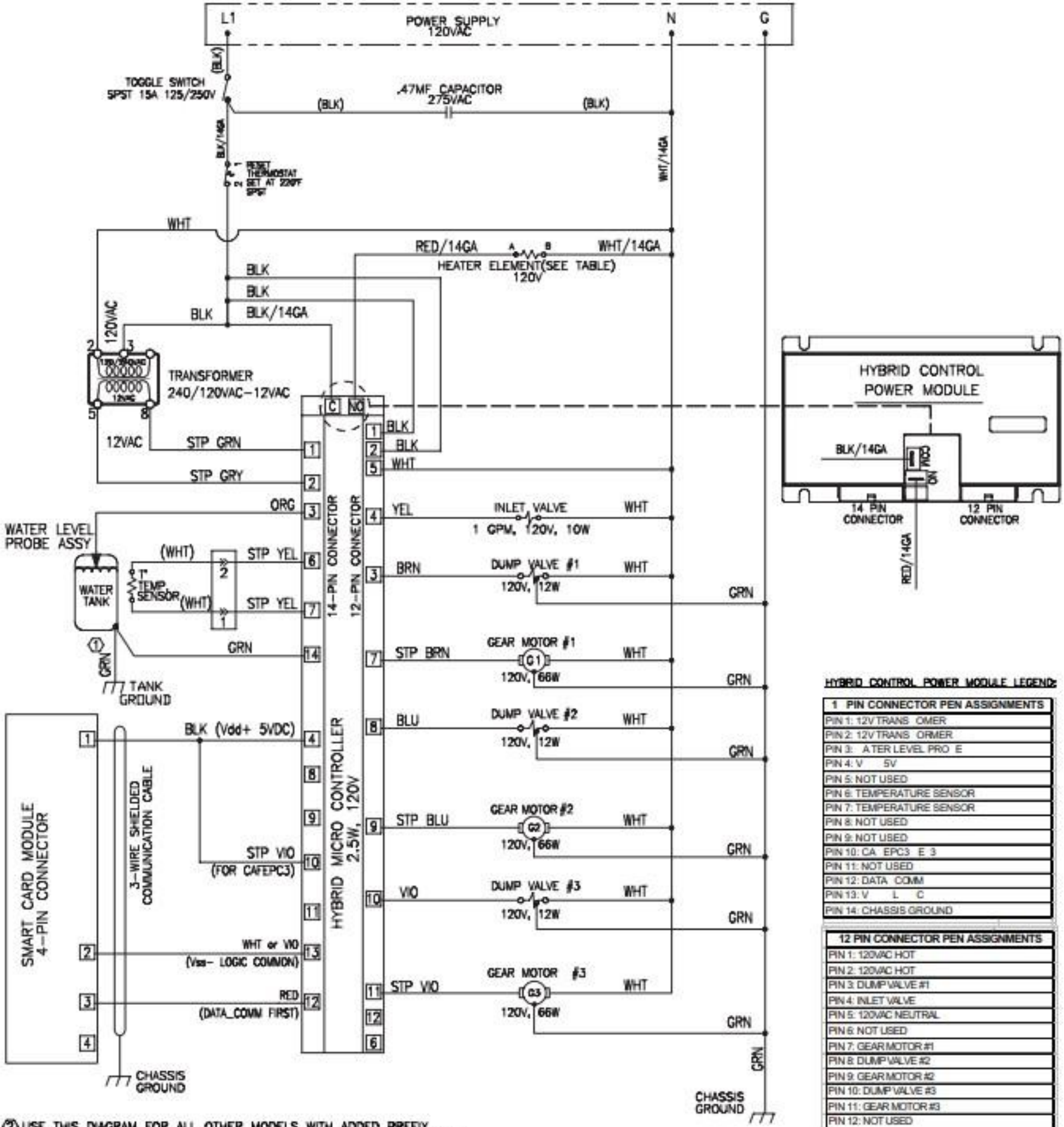

② USE THIS DIAGRAM FOR ALL OTHER MODELS WITH ADDED PREFIX AND/OR DIFFERENT ENDING NUMBERS ON THEIR PART NUMBERS AND

HYBRID CONTROL POWER MODULE LEGEND:

1 PIN CONNECTOR PEN ASSIGNMENTS
PIN 1: 12V TRANS OMER
PIN 2: 12V TRANS ORMER
PIN 3: A TER LEVEL PRO E
PIN 4: V 5V
PIN 5: NOT USED
PIN 6: TEMPERATURE SENSOR
PIN 7: TEMPERATURE SENSOR
PIN 8: NOT USED
PIN 9: NOT USED
PIN 10: CA EPC3 E 3
PIN 11: NOT USED
PIN 12: DATA COMM
PIN 13: V L C
PIN 14: CHASSIS GROUND

12 PIN CONNECTOR PEN ASSIGNMENTS
PIN 1: 120VAC HOT
PIN 2: 120VAC HOT
PIN 3: DUMP VALVE #1
PIN 4: INLET VALVE
PIN 5: 120VAC NEUTRAL
PIN 6: NOT USED
PIN 7: GEAR MOTOR #1
PIN 8: DUMP VALVE #2
PIN 9: GEAR MOTOR #2
PIN 10: DUMP VALVE #3
PIN 11: GEAR MOTOR #3
PIN 12: NOT USED