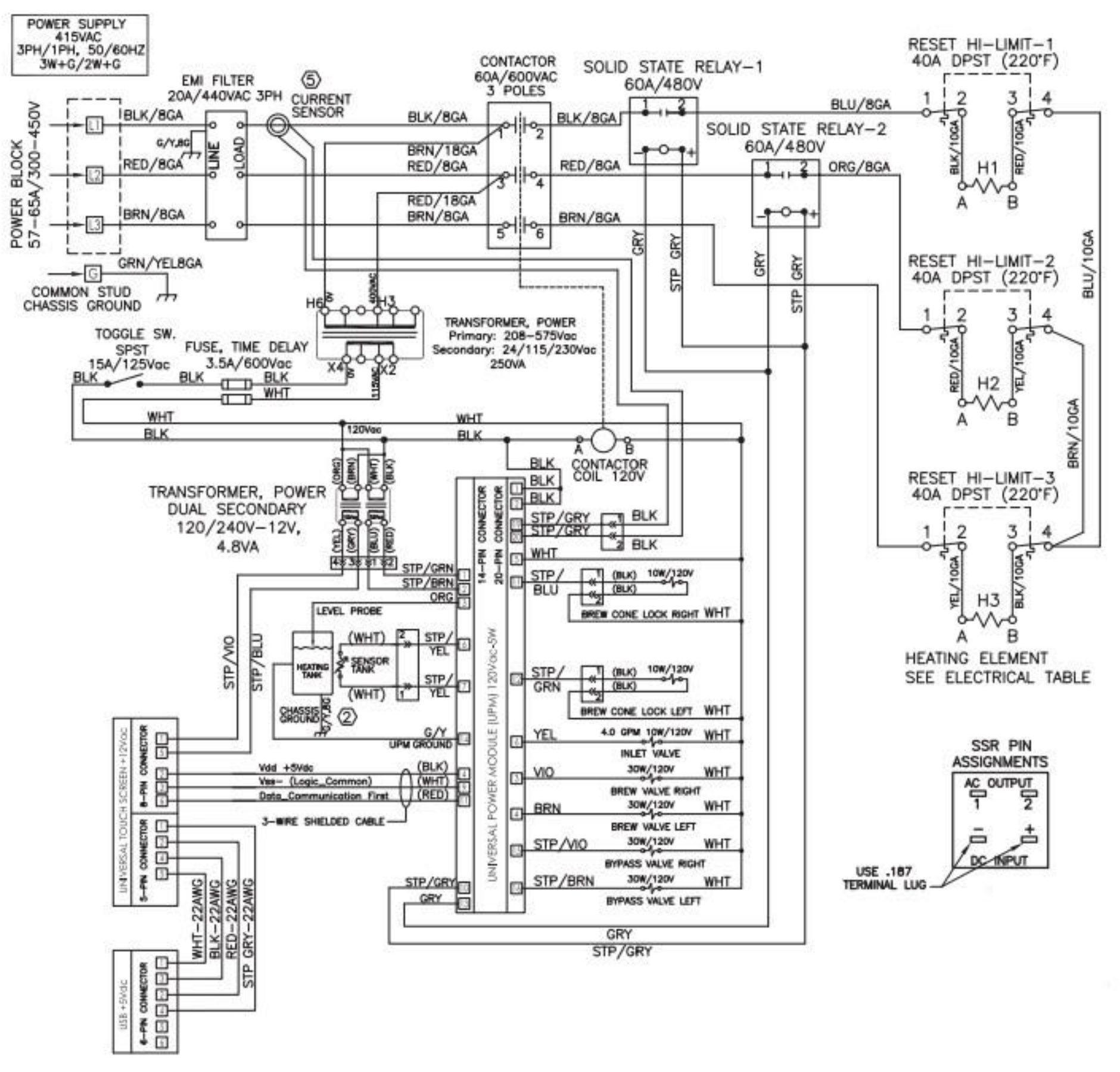
POWER SUPPLY
415VAC
3PH/1PH, 50/60HZ
3W+G/2W+G
POWER BLOCK
57-65A/300-450V
L1
L2
L3
G
BLK/8GA
RED/8GA
BRN/8GA
GRN/YEL8GA
COMMON STUD
CHASSIS GROUND
EMI FILTER
20A/440VAC 3PH
LINE
LOAD
CURRENT SENSOR
CONTACTOR
60A/600VAC
3 POLES
BLK/8GA
BRN/18GA
RED/8GA
RED/18GA
BRN/8GA
SOLID STATE RELAY-1
60A/480V
SOLID STATE RELAY-2
60A/480V
BLU/8GA
ORG/8GA
GRY
STP GRY
RESET HI-LIMIT-1
40A DPST (220°F)
RESET HI-LIMIT-2
40A DPST (220°F)
RESET HI-LIMIT-3
40A DPST (220°F)
BLK/10GA
RED/10GA
YEL/10GA
BLU/10GA
BRN/10GA
H1
H2
H3
A
B
HEATING ELEMENT
SEE ELECTRICAL TABLE
TRANSFORMER, POWER
Primary: 208-575Vac
Secondary: 24/115/230Vac
250VA
TOGGLE SW.
SPST
15A/125Vac
FUSE, TIME DELAY
3.5A/600Vac
BLK
WHT
120Vac
CONTACTOR
COIL 120V
TRANSFORMER, POWER
DUAL SECONDARY
120/240V-12V,
4.8VA
STP/GRY
STP/GRN
STP/BRN
ORG
STP/VIO
STP/BLU
LEVEL PROBE
HEATING TANK
SENSOR TANK
STP/YEL
CHASSIS GROUND
G/Y
UPM GROUND
Vdd +5Vdc
Vss- (Logic_Common)
Data_Communication First
3-WIRE SHIELDED CABLE
UNIVERSAL TOUCH SCREEN +12Vdc
8-PIN CONNECTOR
5-PIN CONNECTOR
USB +5Vdc
4-PIN CONNECTOR
WHT-22AWG
BLK-22AWG
RED-22AWG
STP GRY-22AWG
14-PIN CONNECTOR
20-PIN CONNECTOR
UNIVERSAL POWER MODULE (UPM) 120Vac-5W
BREW CONE LOCK RIGHT
BREW CONE LOCK LEFT
INLET VALVE
BREW VALVE RIGHT
BREW VALVE LEFT
BYPASS VALVE RIGHT
BYPASS VALVE LEFT
10W/120V
4.0 GPM 10W/120V
30W/120V
SSR PIN
ASSIGNMENTS
AC OUTPUT
DC INPUT
USE .187
TERMINAL LUG

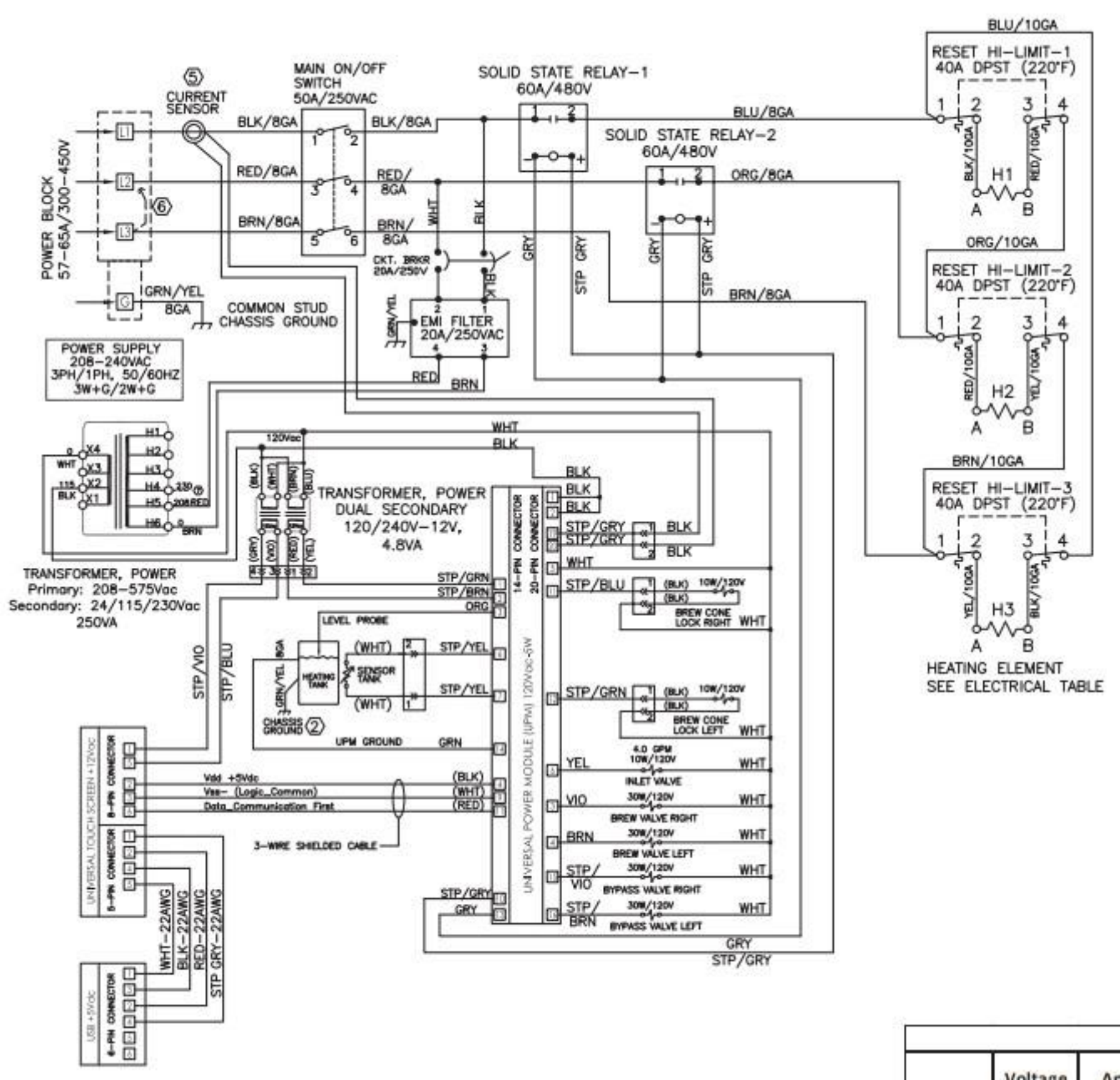
POWER BLOCK
57-65A/300-450V
L1
L2
L3
G
GRN/YEL
8GA
COMMON STUD
CHASSIS GROUND
CURRENT SENSOR
MAIN ON/OFF SWITCH
50A/250VAC
BLK/8GA
RED/8GA
BRN/8GA
RED/8GA
BRN/8GA
WHT
BLK
CKT. BRKR
20A/250V
GRN/YEL
EMI FILTER
20A/250VAC
RED
BRN
SOLID STATE RELAY-1
60A/480V
SOLID STATE RELAY-2
60A/480V
BLU/8GA
ORG/8GA
GRY
STP GRY
BRN/8GA
BLU/10GA
RESET HI-LIMIT-1
40A DPST (220°F)
BLK/10GA
RED/10GA
H1
A
B
ORG/10GA
RESET HI-LIMIT-2
40A DPST (220°F)
RED/10GA
YEL/10GA
H2
BRN/10GA
RESET HI-LIMIT-3
40A DPST (220°F)
YEL/10GA
BLK/10GA
H3
HEATING ELEMENT
SEE ELECTRICAL TABLE
POWER SUPPLY
208-240VAC
3PH/1PH, 50/60HZ
3W+G/2W+G
TRANSFORMER, POWER
Primary: 208-575Vac
Secondary: 24/115/230Vac
250VA
120Vac
TRANSFORMER, POWER
DUAL SECONDARY
120/240V-12V,
4.8VA
WHT
BLK
STP/GRY
STP/BLU
BREW CONE LOCK RIGHT
STP/GRN
BREW CONE LOCK LEFT
STP/BRN
ORG
LEVEL PROBE
HEATING TANK
SENSOR TANK
STP/YEL
CHASSIS GROUND
UPM GROUND
GRN
STP/VIO
STP/BLU
YEL
INLET VALVE
VIO
BREW VALVE RIGHT
BRN
BREW VALVE LEFT
STP/VIO
BYPASS VALVE RIGHT
STP/BRN
BYPASS VALVE LEFT
GRY
STP/GRY
14-PIN CONNECTOR
20-PIN CONNECTOR
UNIVERSAL POWER MODULE (UPM) 120Vac-5W
UNIVERSAL TOUCH SCREEN +12Vdc
8-PIN CONNECTOR
6-PIN CONNECTOR
Vdd +5Vdc
Vss- (Logic_Common)
Data_Communication First
3-WIRE SHIELDED CABLE
USB +5Vdc
WHT-22AWG
BLK-22AWG
RED-22AWG
STP GRY-22AWG

	Voltage	Ar

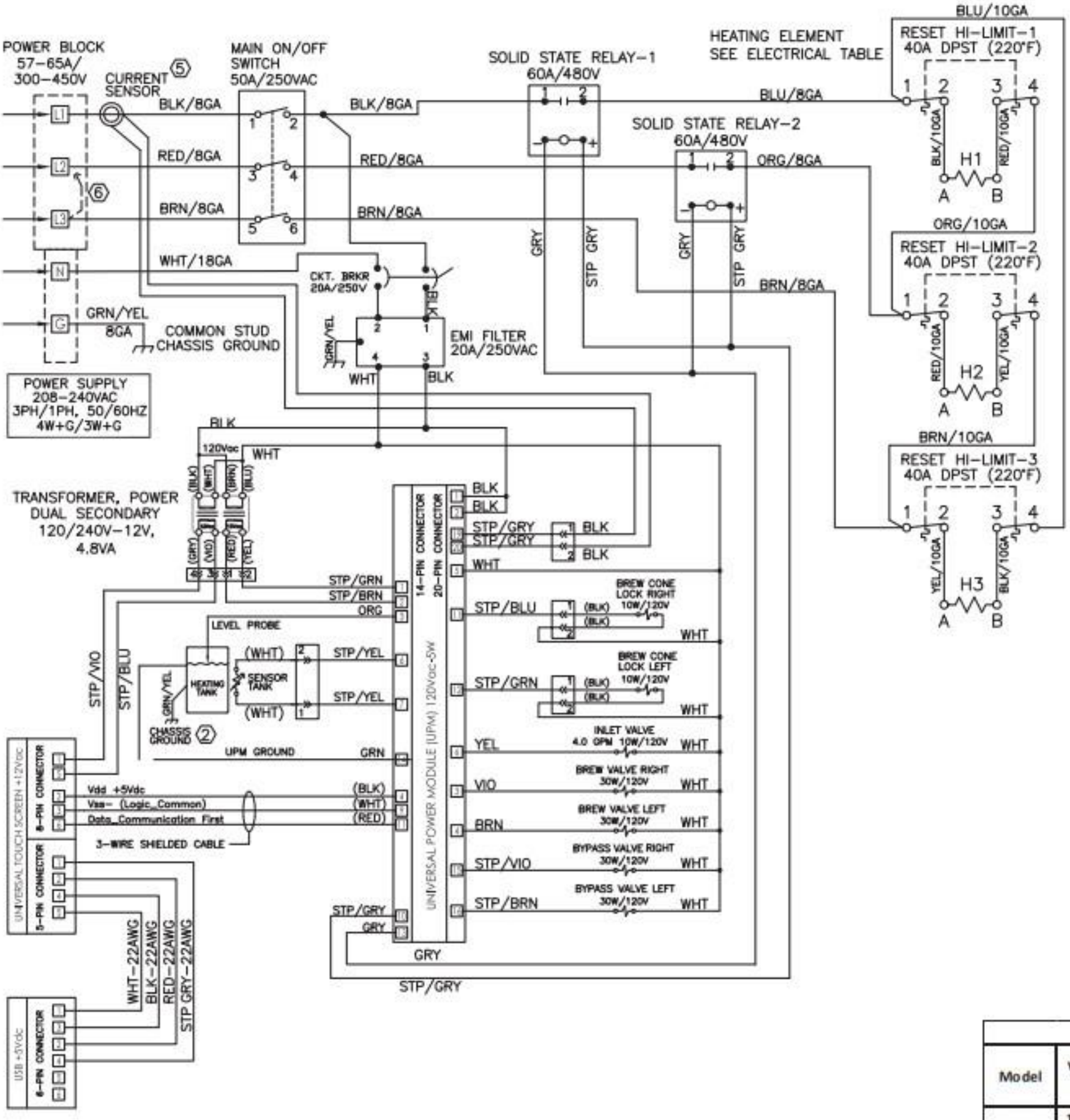

Model	Vol V
	120

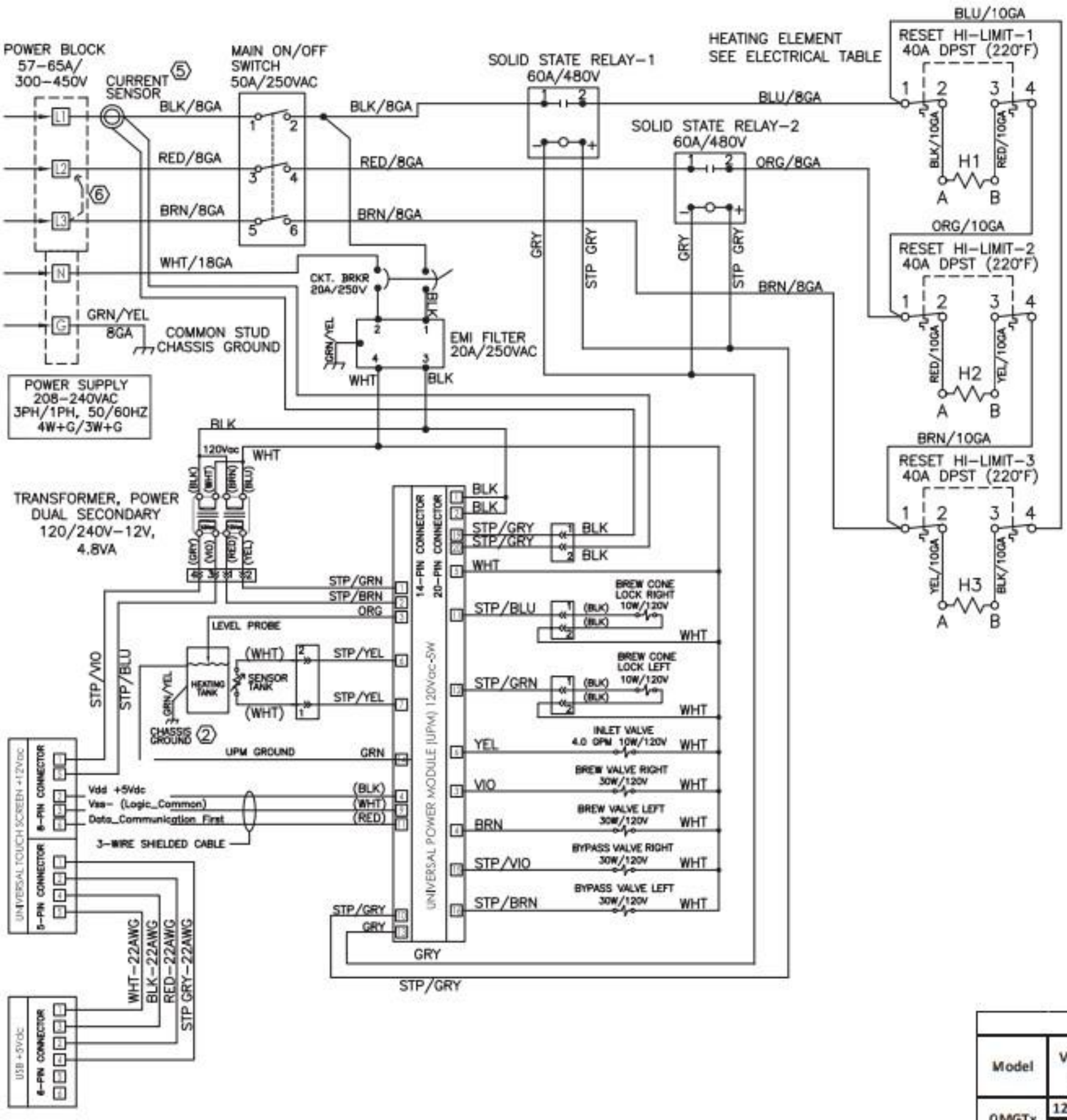

Model	Vol
OMGTx	120

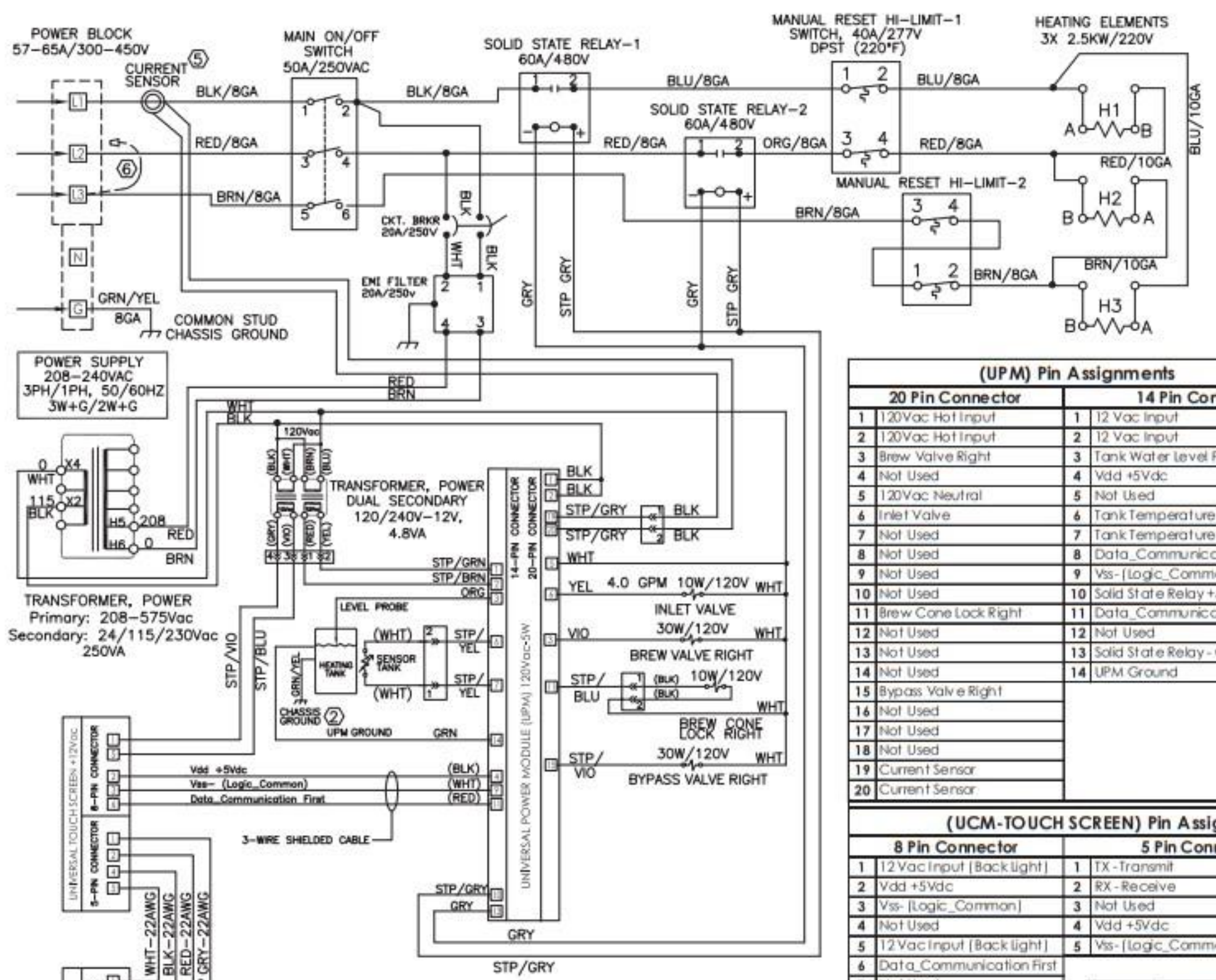

(UPM) Pin Assignments

	20 Pin Connector		14 Pin Con
1	120Vac Hot Input	1	12 Vac Input
2	120Vac Hot Input	2	12 Vac Input
3	Brew Valve Right	3	Tank Water Level F
4	Not Used	4	Vdd +5Vdc
5	120Vac Neutral	5	Not Used
6	Inlet Valve	6	Tank Temperature
7	Not Used	7	Tank Temperature
8	Not Used	8	Data_Communica
9	Not Used	9	Vss-(Logic_Comm
10	Not Used	10	Solid State Relay +
11	Brew Cone Lock Right	11	Data_Communica
12	Not Used	12	Not Used
13	Not Used	13	Solid State Relay -
14	Not Used	14	UPM Ground
15	Bypass Valve Right		
16	Not Used		
17	Not Used		
18	Not Used		
19	Current Sensor		
20	Current Sensor		

(UCM-TOUCH SCREEN) Pin Assig

	8 Pin Connector		5 Pin Con
1	12 Vac Input (Back Light)	1	TX - Transmit
2	Vdd +5Vdc	2	RX - Receive
3	Vss- (Logic_Common)	3	Not Used
4	Not Used	4	Vdd +5Vdc
5	12 Vac Input (Back Light)	5	Vss- (Logic_Comm
6	Data_Communication First		
7	Not Used		
8	Not Used		

(USB) Pin Assignments

	6- Pin Connector
1	Vss- (Logic_Common)
2	TX - Transmit

Model	Voltage Vac
	208Y

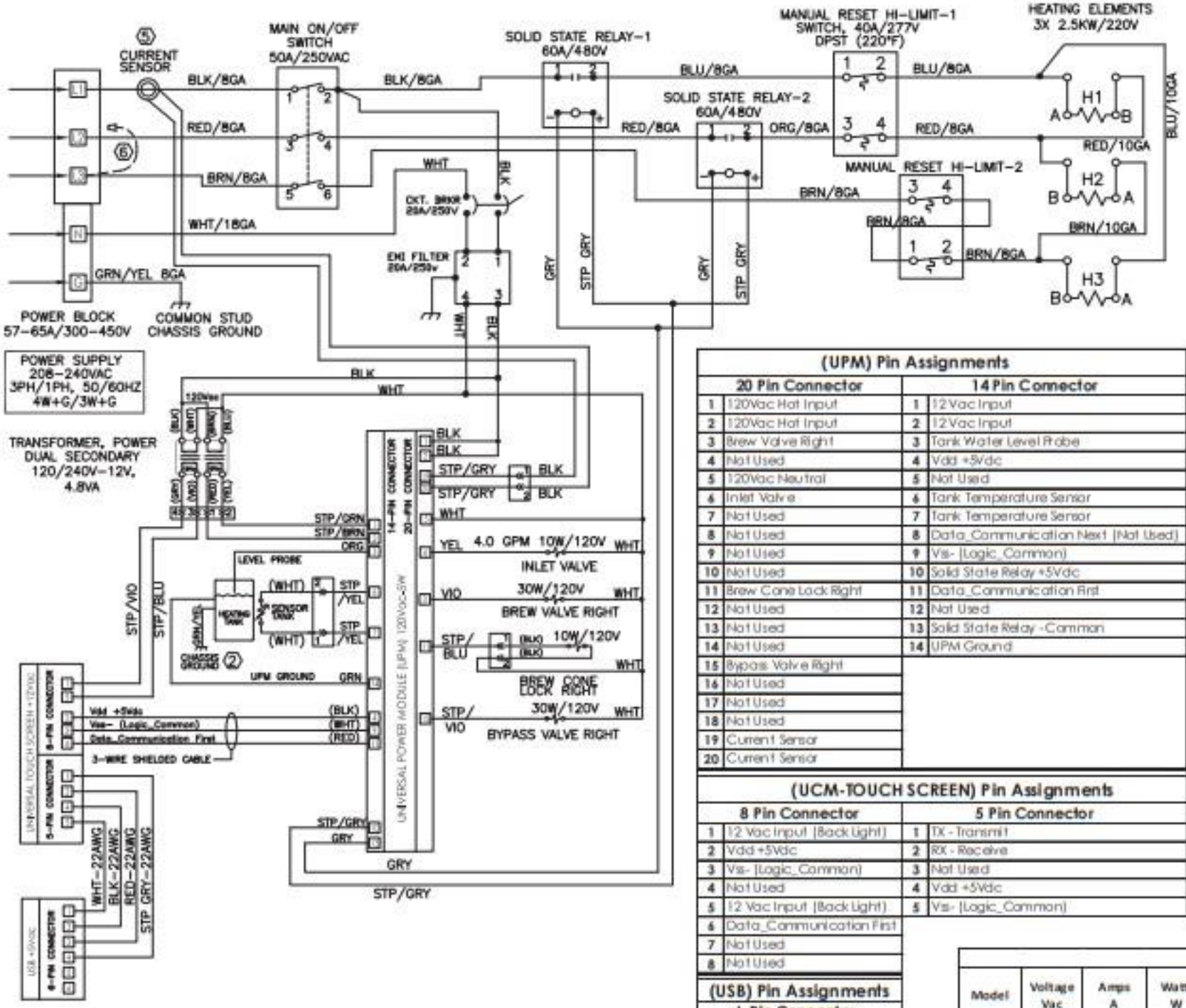

(UPM) Pin Assignments

20 Pin Connector		14 Pin Connector	
1	120Vac Hot Input	1	12Vac Input
2	120Vac Hot Input	2	12Vac Input
3	Brew Valve Right	3	Tank Water Level Probe
4	Not Used	4	Vdd +5Vdc
5	120Vac Neutral	5	Not Used
6	Inlet Valve	6	Tank Temperature Sensor
7	Not Used	7	Tank Temperature Sensor
8	Not Used	8	Data_Communication Next (Not Used)
9	Not Used	9	Vss- (Logic_Common)
10	Not Used	10	Solid State Relay +5Vdc
11	Brew Cone Lock Right	11	Data_Communication First
12	Not Used	12	Not Used
13	Not Used	13	Solid State Relay -Common
14	Not Used	14	UPM Ground
15	Bypass Valve Right		
16	Not Used		
17	Not Used		
18	Not Used		
19	Current Sensor		
20	Current Sensor		

(UCM-TOUCH SCREEN) Pin Assignments

8 Pin Connector		5 Pin Connector	
1	12 Vac Input (Back Light)	1	TX - Transmit
2	Vdd +5Vdc	2	RX - Receive
3	Vss- (Logic_Common)	3	Not Used
4	Not Used	4	Vdd +5Vdc
5	12 Vac Input (Back Light)	5	Vss- (Logic_Common)
6	Data_Communication First		
7	Not Used		
8	Not Used		

(USB) Pin Assignments

4-Pin Connector

ELECTRICAL RATING TABLE

Model	Voltage Vac	Amps A	Watts W	Hertz Hz	# of Conductor Wires	Phase	# of Tank Elements	Tank Element Rating W/V