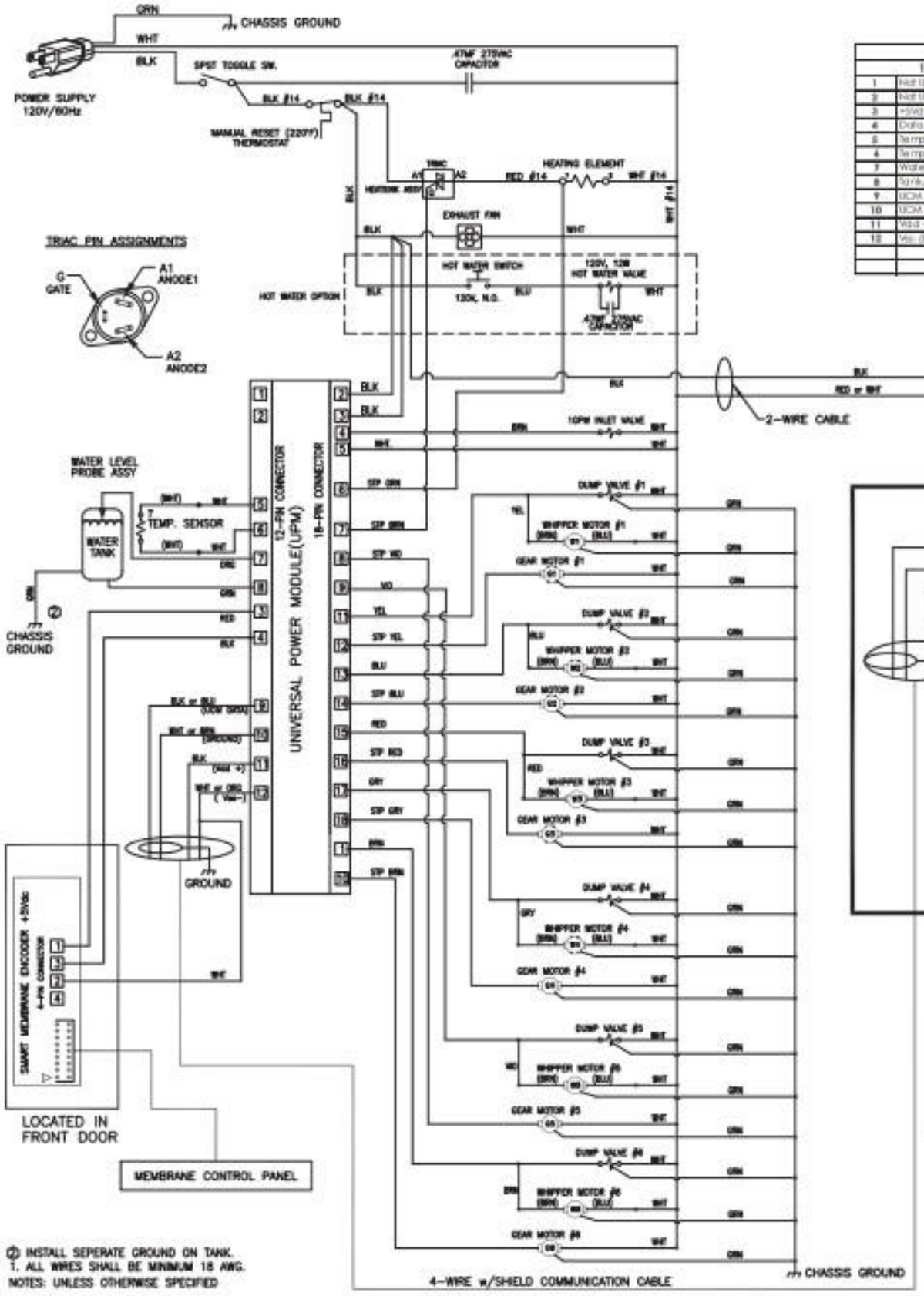

UPM Pin Assignments (WC-10013)			
12-Pin Connector		18-Pin Connector	
1	Not Used	1	Whipper Motor #6 & Dump Valve #6
2	Not Used	2	120Vac Hot
3	+5Vdc SME-8	3	120Vac Hot
4	Data_Comm SME-8	4	Inlet Valve
5	Temperature Sensor	5	120Vac Neutral
6	Temperature Sensor	6	Triac A2
7	Water Level Probe	7	Gate_Triac
8	Tank/UPM Ground	8	Gear Motor #5
9	UCM_Data	9	Whipper Motor #5 & Dump Valve #5
10	UCM_Data Ground	10	Gear Motor #6
11	Vdd +12Vdc	11	Whipper Motor #1 & Dump Valve #1
12	Vss (Logic Common) UCM/SME-8	12	Gear Motor #1
		13	Whipper Motor #2 & Dump Valve #2
		14	Gear Motor #2
		15	Whipper Motor #3 & Dump Valve #3
		16	Gear Motor #3
		17	Whipper Motor #4 & Dump Valve #4
		18	Gear Motor #4

UCM Pin Assignments (WC-778)	
8-Pin Connector	
1	UCM_Data
2	UCM_Data Ground
3	Vss (Logic Common)
4	Vdd +12Vdc
5	120Vac Neutral
6	Not Used
7	Not Used
8	120Vac Hot

SME-8 Pin Assignments (WC-10012)	
4-Pin Connector	
1	Vdd +5Vdc
2	Vss (Logic Common)
3	Data_Comm Rxd
4	NOT USED

ELECTRICAL RATING TABLE								
Model	Voltage V	Amps A	Watts W	Hertz Hz	# of Conductor Wires	Phase	# of Tank Elements	Ta
PCGT6xx	120	15.0	1800	50/60	2	1	1	16
PCGT6Cxx	120	12.5	1500	50/60	2	1	1	11

NOTES: UNLESS OTHERWISE SPECIFIED
1. ALL WIRES SHALL BE MINIMUM 18 AWG.
② INSTALL SEPERATE GROUND ON TANK.

NAME: SEE TABLE	TITLE: LADDER DIA
MATERIAL: SEE TABLE	
APPROVED: SEE TABLE	
DATE: SEE TABLE	PART NUMBER: LD-PCGT6-
WIRES: SEE TABLE	
PHASE: SEE TABLE	