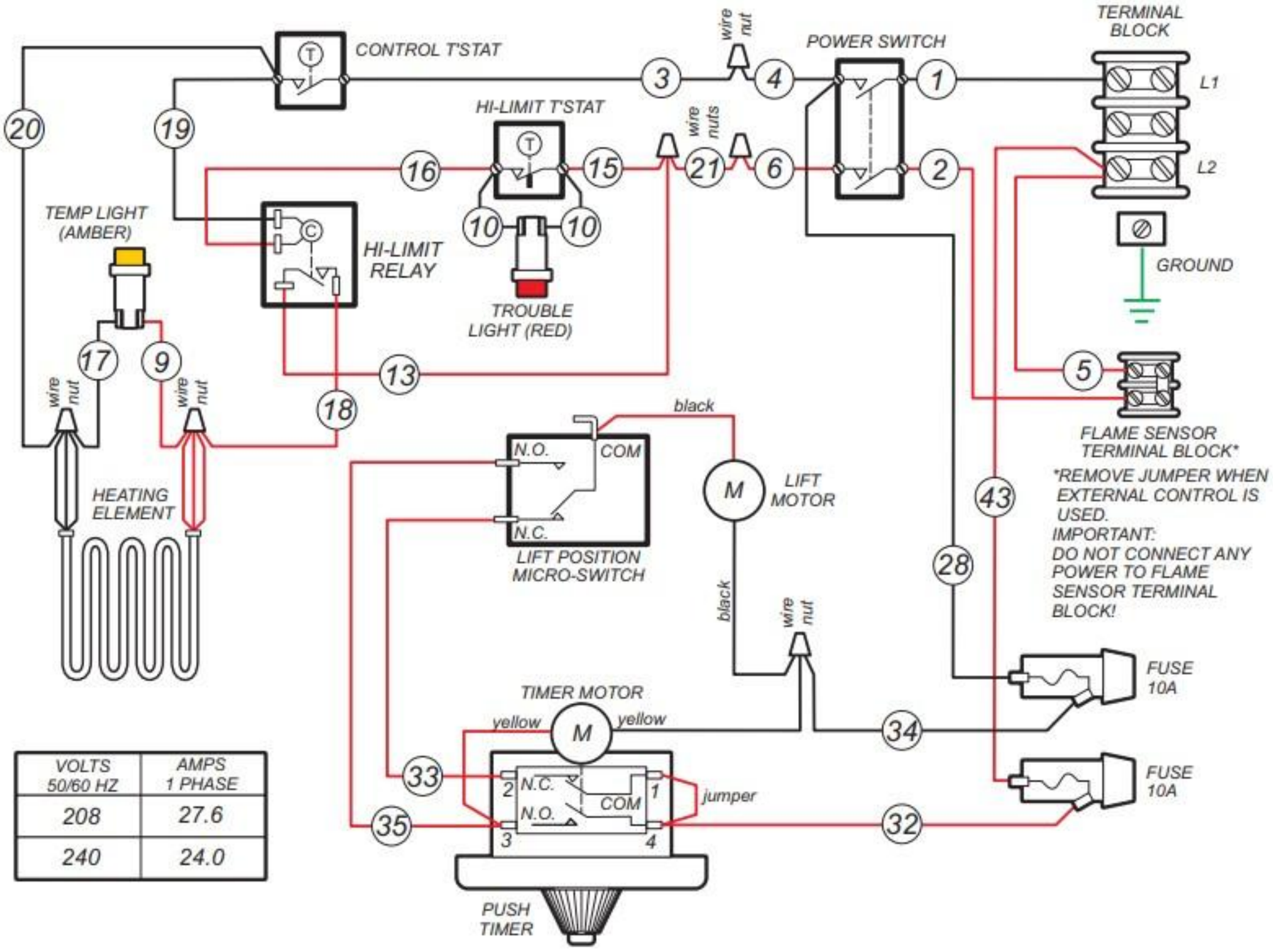

VOLTS 50/60 HZ	AMPS 1 PHASE
208	27.6
240	24.0

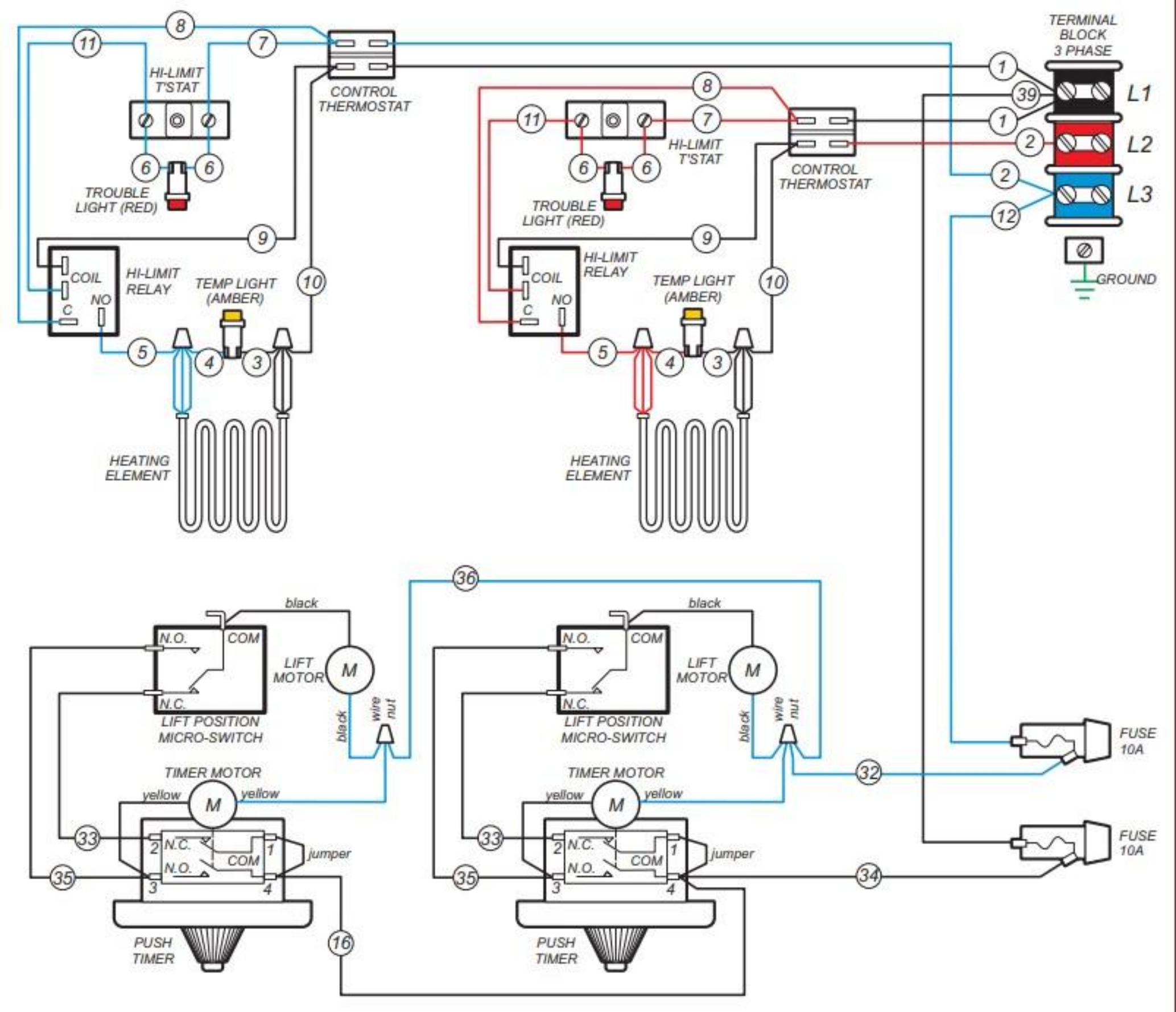
TERMINAL BLOCK 3 PHASE
L1
L2
L3
GROUND
HI-LIMIT T'STAT
CONTROL THERMOSTAT
TROUBLE LIGHT (RED)
COIL
NO
C
HI-LIMIT RELAY
TEMP LIGHT (AMBER)
HEATING ELEMENT
HI-LIMIT T'STAT
CONTROL THERMOSTAT
TROUBLE LIGHT (RED)
COIL
NO
C
HI-LIMIT RELAY
TEMP LIGHT (AMBER)
HEATING ELEMENT
black
N.O.
COM
N.C.
LIFT MOTOR
M
LIFT POSITION MICRO-SWITCH
black
wire nut
TIMER MOTOR
yellow
yellow
N.C.
N.O.
COM
jumper
PUSH TIMER
black
N.O.
COM
N.C.
LIFT MOTOR
M
LIFT POSITION MICRO-SWITCH
black
wire nut
TIMER MOTOR
yellow
yellow
N.C.
N.O.
COM
jumper
PUSH TIMER
FUSE 10A
FUSE 10A

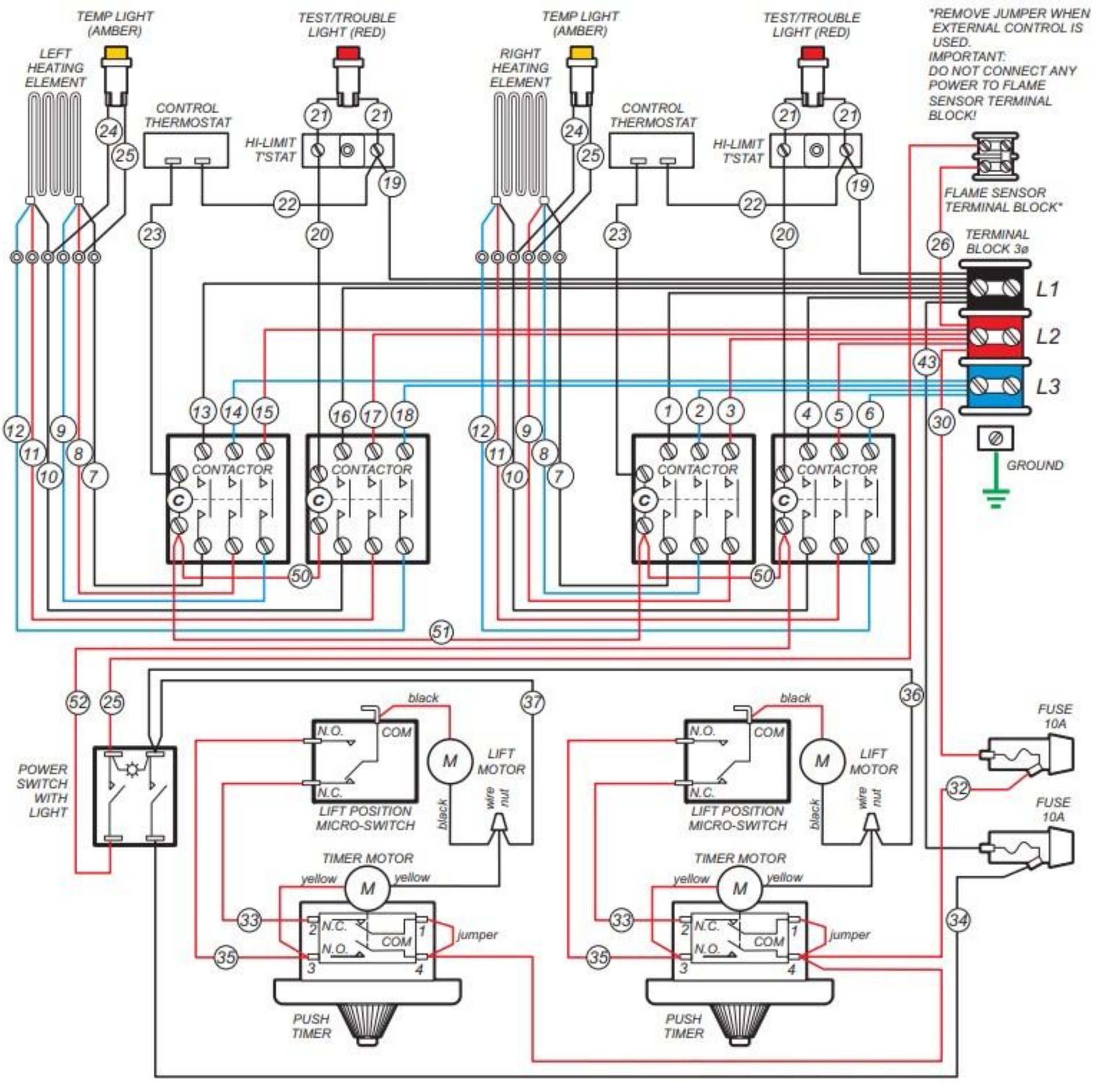
TEMP LIGHT (AMBER)
TEST/TROUBLE LIGHT (RED)
TEMP LIGHT (AMBER)
TEST/TROUBLE LIGHT (RED)
*REMOVE JUMPER WHEN EXTERNAL CONTROL IS USED.
IMPORTANT: DO NOT CONNECT ANY POWER TO FLAME SENSOR TERMINAL BLOCK!
LEFT HEATING ELEMENT
RIGHT HEATING ELEMENT
CONTROL THERMOSTAT
HI-LIMIT T'STAT
FLAME SENSOR TERMINAL BLOCK*
TERMINAL BLOCK 3ø
L1
L2
L3
GROUND
CONTACTOR
C
POWER SWITCH WITH LIGHT
black
N.O.
COM
N.C.
LIFT POSITION MICRO-SWITCH
M
LIFT MOTOR
wire nut
TIMER MOTOR
yellow
jumper
PUSH TIMER
FUSE 10A